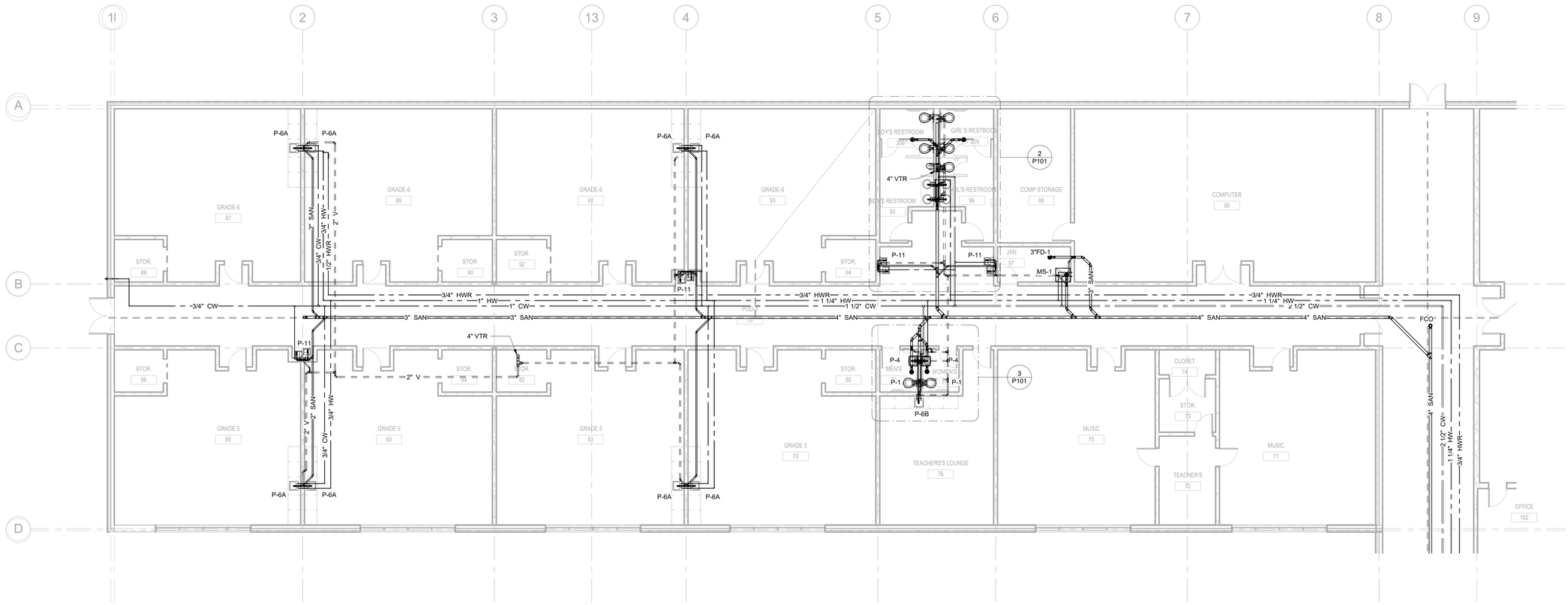

1 FIRST FLOOR - SANITARY - WATER & GAS - AREA A
1/8" = 1'-0"

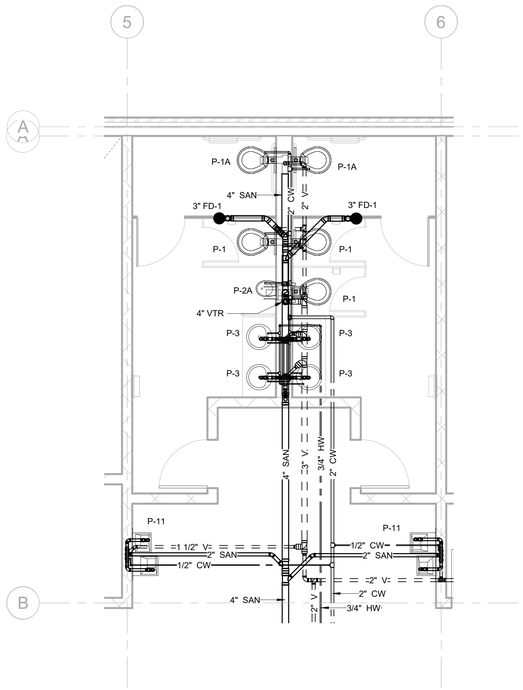

2 FIRST FLOOR - AREA A - BOYS & GIRLS RESTROOM
1/4" = 1'-0"

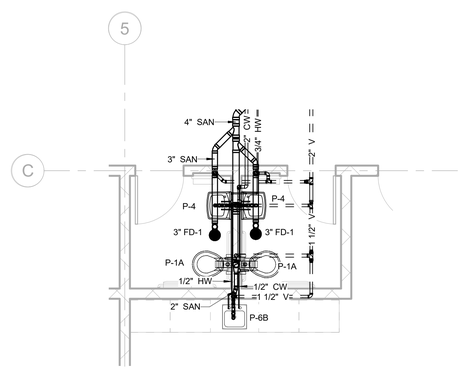

3 FIRST FLOOR - AREA A - MEN'S & WOMEN'S RESTROOM
1/4" = 1'-0"

REVISION	DESCRIPTION	BY	DATE

GENERAL NOTES

1. REFER TO P001 FOR GENERAL NOTES, SYMBOL LEGEND AND LIST OF ABBREVIATIONS.

ARCHITECT

MEP. ENG.

NIST

FOR OFFICIAL USE ONLY

U.S. DEPARTMENT OF COMMERCE

OFFICE OF FACILITIES & PROPERTY MANAGEMENT

NIST – PRIMARY SCHOOL

PLUMBING FLOOR PLAN AREA A

P101

SH. NO. ___ OF ___ DWG. P101

APPROVED BY	DATE	SPONSOR	DATE	MAINTENANCE ENG. OFF.	DATE	ENVIRONMENTAL MANAGEMENT	DATE	SAFETY	DATE	SHED – NIST FIRE MARSHAL/AHJ	DATE	FACILITIES ENGR. OFF.	DATE	PROJECT LEADER VAY	DATE	DRAWN BY AA	DATE 08/15/2022	PROJECT/ W.O. # Project Number