© GRIMM AND PARKER, P.C. 2014

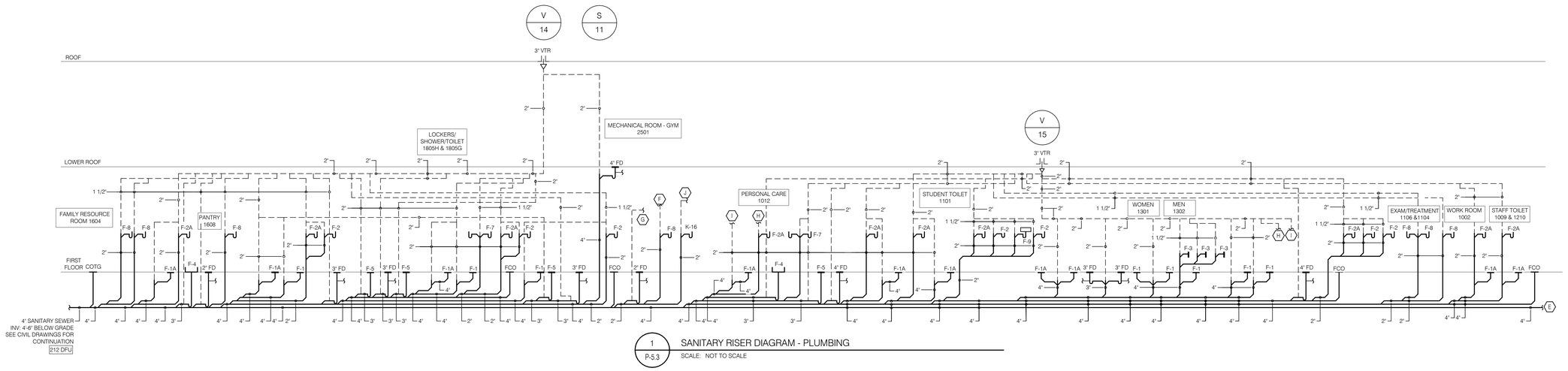

1 P-5.3 SANITARY RISER DIAGRAM - PLUMBING

SCALE: NOT TO SCALE

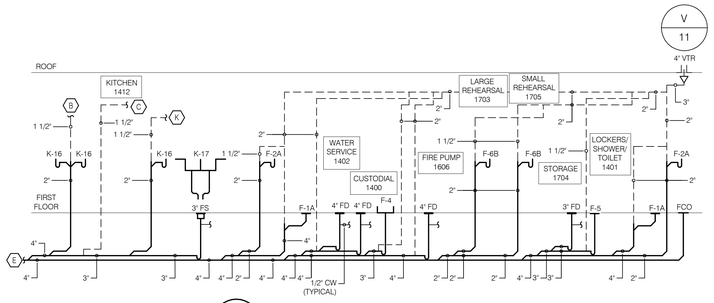

2 P-5.3 SANITARY RISER DIAGRAM - PLUMBING

SCALE: NOT TO SCALE

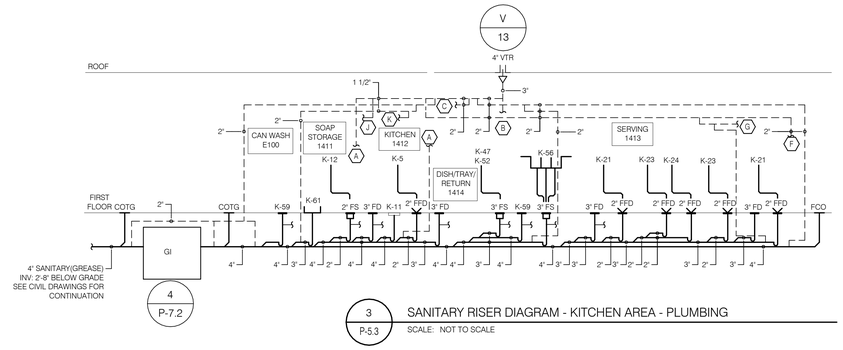

3 P-5.3 SANITARY RISER DIAGRAM - KITCHEN AREA - PLUMBING

SCALE: NOT TO SCALE

SETTY
ONE SOUTH STREET, SUITE 1110
BALTIMORE, MARYLAND 21202
TEL 443-539-5035
WATER FOOD SAFETY MANAGEMENT
ENERGY MANAGEMENT SERVICES • DESIGN AND CONSULTING
CITY OF BALTIMORE • BALTIMORE COUNTY
DISTRICT OF COLUMBIA • MARYLAND
www.SETTY.com
PROJECT NUMBER: 2017-17-1-0-0-0-0-0
GRIMM AND PARKER
11720 Beltsville Drive
Suite 600
Calverton, MD 20705
Tel: 301.595.1000
www.grimmandparker.com
GP# 21553

PLUMBING SANITARY RISER DIAGRAM

HOLABIRD ACADEMY PK-8
CITY OF BALTIMORE, MARYLAND

DATE	DESCRIPTION

P-5.2

03/13/2017
BID SET

© GRIMM AND PARKER, P.C. 2014