© GRIMM AND PARKER, P.C. 2014

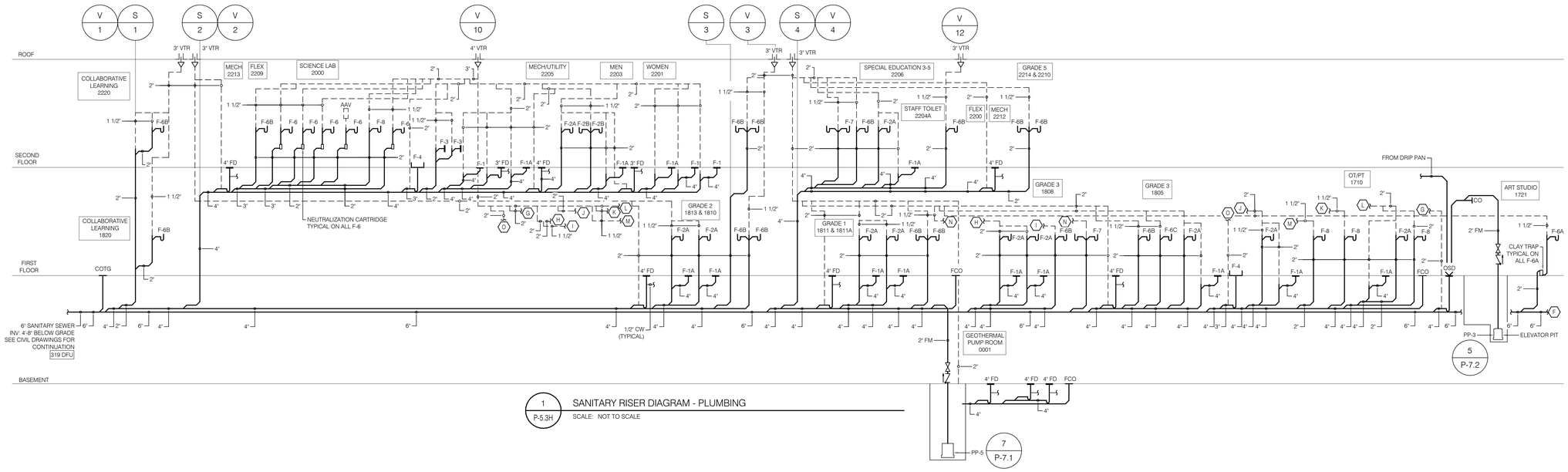

1 P-5.3H SANITARY RISER DIAGRAM - PLUMBING

SCALE: NOT TO SCALE

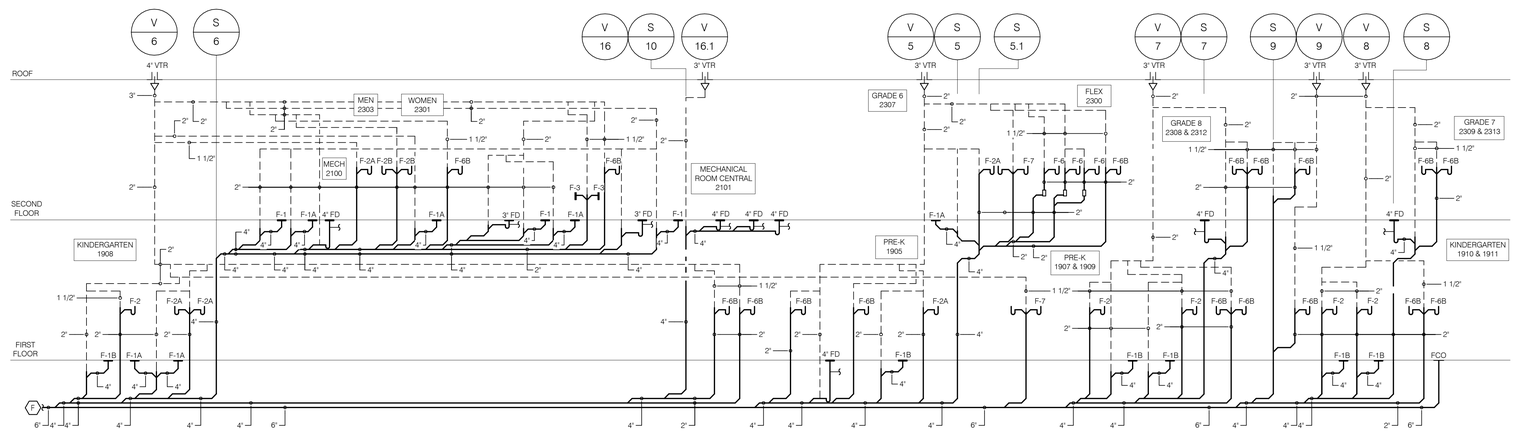

2 P-5.3H SANITARY RISER DIAGRAM - PLUMBING

SCALE: NOT TO SCALE

SETTY
ONE SOUTH STREET, SUITE 1110
BALTIMORE, MARYLAND 21202
TEL 443-329-5035
MAINTENANCE MANAGEMENT · ENERGY MANAGEMENT
ENERGY MANAGEMENT SERVICES · CITIZEN SERVICES
CITY OF BALTIMORE · CITY OF COLUMBIA · DISTRICT OF COLUMBIA · MARYLAND
www.SETTY.com
PROJECT NUMBER: SA2017-1 # # # #

11720 Beltsville Drive
Suite 600
Calverton, MD 20705
Tel: 301.595.1000
www.grimmandparker.com

G+P GRIMM AND PARKER
GP# 21553

PLUMBING SANITARY RISER DIAGRAM

HOLABIRD ACADEMY PK-8
CITY OF BALTIMORE, MARYLAND

DATE	DESCRIPTION

P-5.3H

03/13/2017
BID SET

© GRIMM AND PARKER, P.C. 2014