© GRIMM AND PARKER, P.C. 2014

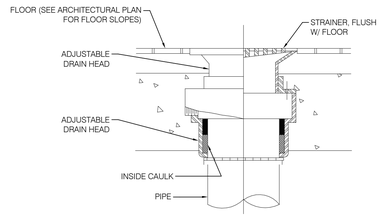

3 / P-7.1 FLOOR DRAIN DETAIL

SCALE: NOT TO SCALE

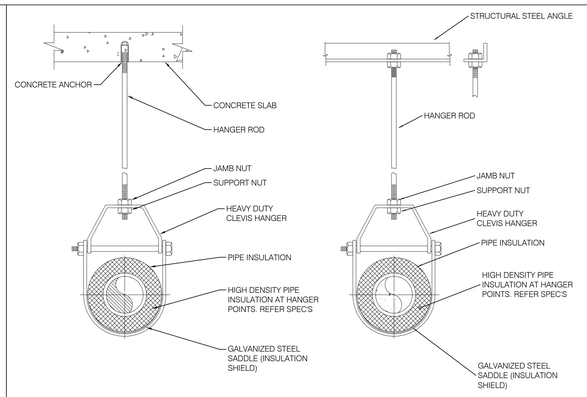

2 / P-7.1 PIPE SUPPORT DETAIL

SCALE: NOT TO SCALE

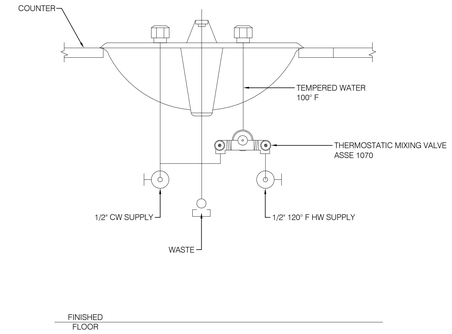

1 / P-7.1 LOCAL MIXING VALVE DETAIL

SCALE: NOT TO SCALE

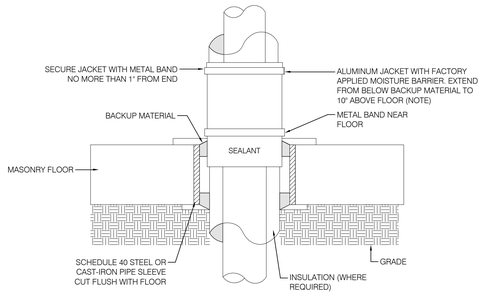

NOTE : OMIT ALUMINUM JACKET IF PIPING IS UNINSULATED.

6 / P-7.1 PIPE PENETRATION THROUGH FLOOR

SCALE: NOT TO SCALE

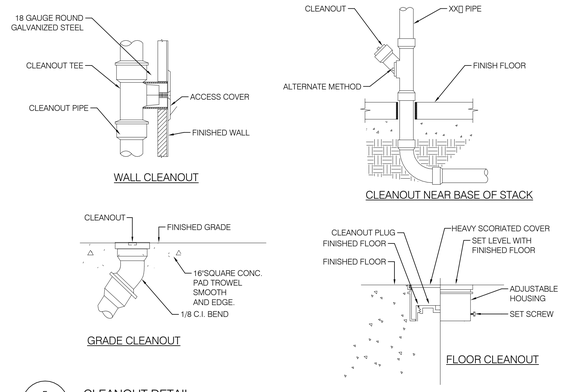

5 / P-7.1 CLEANOUT DETAIL

SCALE: NOT TO SCALE

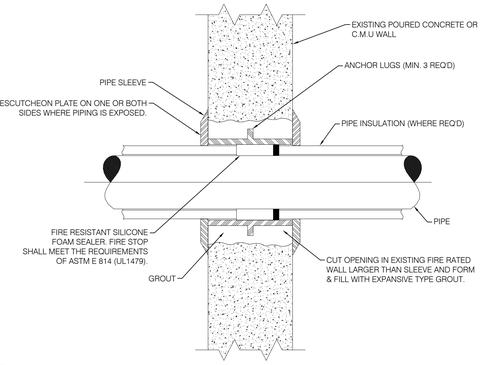

4 / P-7.1 PIPE PENETRATION THROUGH FIRE RATED WALL

SCALE: NOT TO SCALE

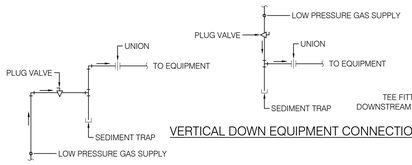

VERTICAL DOWN EQUIPMENT CONNECTION

VERTICAL UP EQUIPMENT CONNECTION

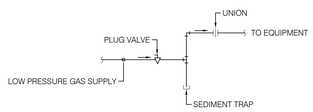

HORIZONTAL EQUIPMENT CONNECTION

LOW PRESSURE DETAIL

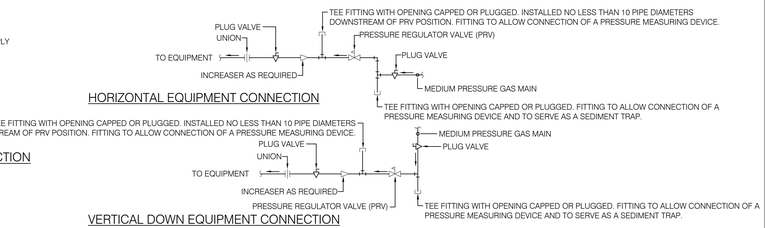

HORIZONTAL EQUIPMENT CONNECTION

VERTICAL DOWN EQUIPMENT CONNECTION

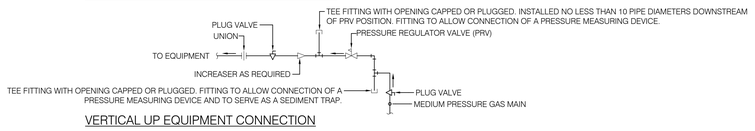

VERTICAL UP EQUIPMENT CONNECTION

MEDIUM TO LOW PRESSURE DETAIL

8 / P-7.1 GAS EQUIPMENT CONNECTION DETAIL

SCALE: NOT TO SCALE

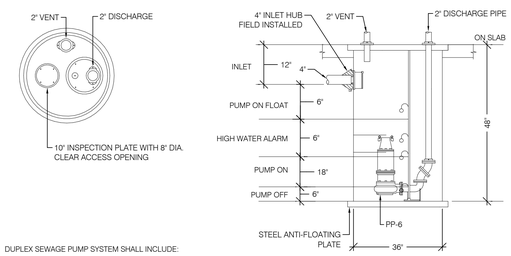

DUPLEX SEWAGE PUMP SYSTEM SHALL INCLUDE:

- PUMP CONTROL PANEL
- FLOAT SWITCHES
- PUMP REMOVAL SYSTEM
- PUMP DISCHARGE PIPE ASSEMBLIES
- FIBERGLASS BASIN
- BASIN WITH STEEL COVER SHALL BE BOLTED TO THE TOP FLANGE OF THE BASIN PUMP
- MOUNTING BASE SHALL BE BOLTED TO THE STEEL ANTI-FLOATING PLATE THAT IS EMBEDDED IN THE BOTTOM OF THE FIBERGLASS BASIN

7 / P-7.1 SEWAGE EJECTOR DETAIL

SCALE: NOT TO SCALE

SETTY
ONE SOUTH STREET, SUITE 1110
BALTIMORE, MARYLAND 21202
TEL 410-539-5035
WATER FOUNTAIN SERVICE • WATER MANAGEMENT
ENERGY MANAGEMENT SERVICES • DESIGN BUILD SERVICES
CONSULTING • SALES • SERVICE • ENGINEERING
DISTRICT OF COLUMBIA • MARYLAND
www.SETTY.com

PROJECT NUMBER: SA2017-17 # # # #

11720 Beltsville Drive
Suite 600
Calverton, MD 20705
Tel: 301.595.1000
www.grimmandparker.com
GRIMM AND PARKER

GP# 21553

PLUMBING DETAILS

HOLABIRD ACADEMY PK-8
CITY OF BALTIMORE, MARYLAND

DATE	DESCRIPTION

P-7.1

03/13/2017
BID SET

© GRIMM AND PARKER, P.C. 2014