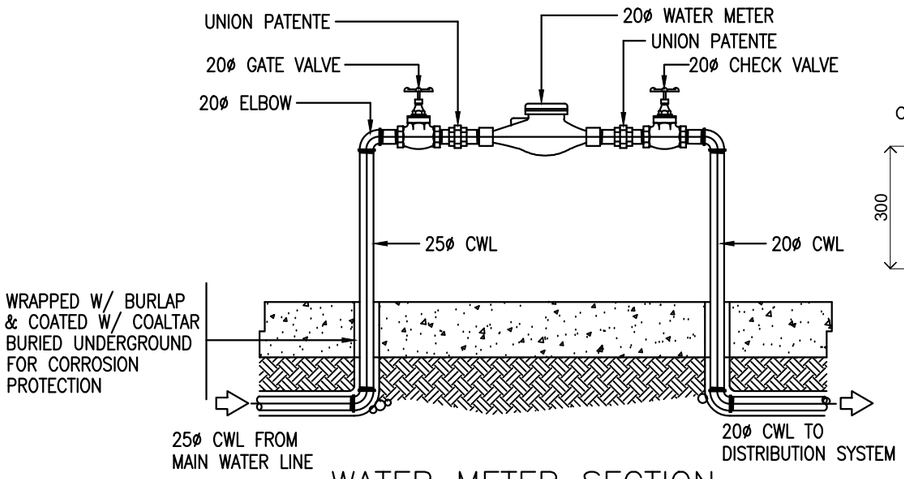

WATER METER SECTION

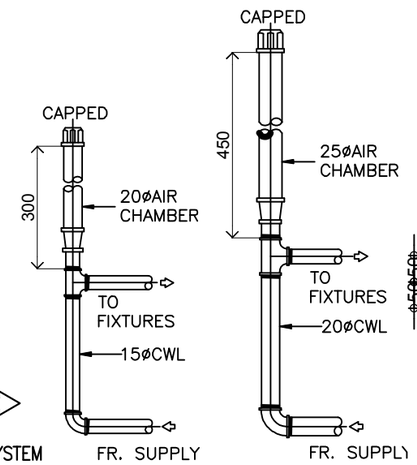

DETAIL OF AIR CHAMBER

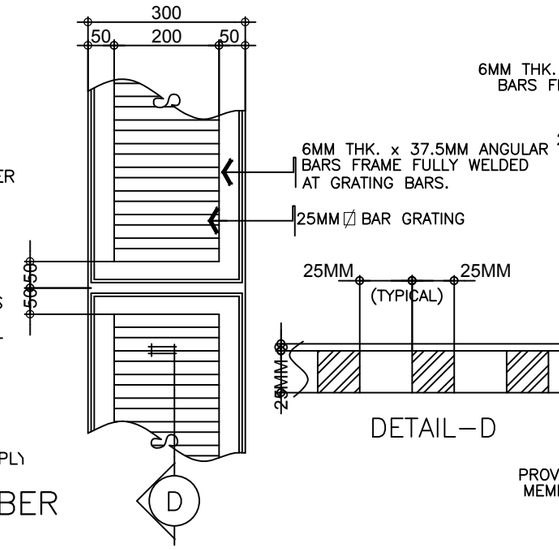

SPOT DET.–B

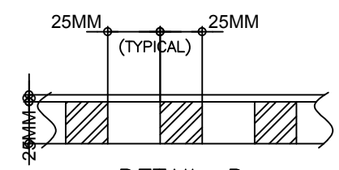

DETAIL–D

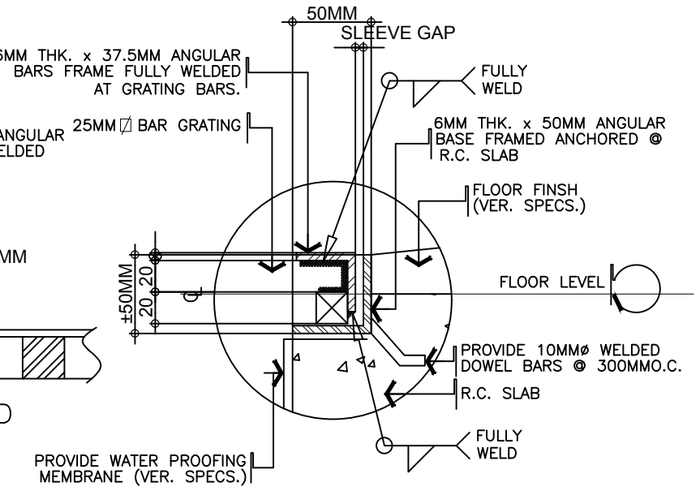

SPOT DET.–C

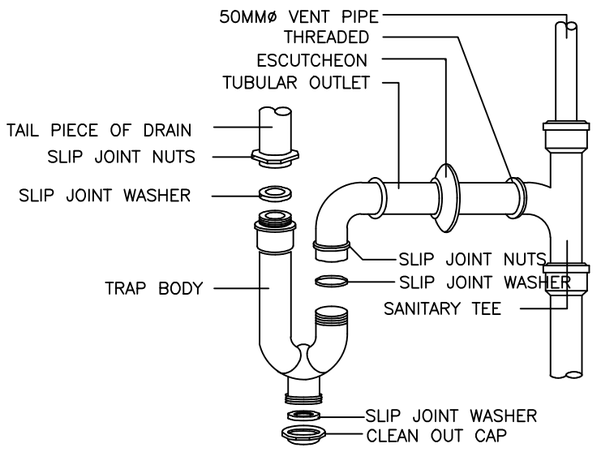

LAVATORY CONNECTION

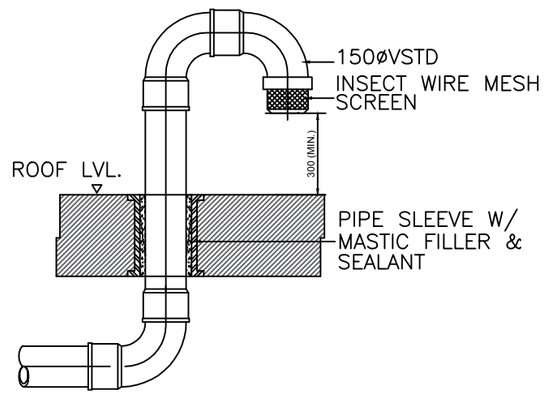

DETAIL OF VENT STACK THRU DECK

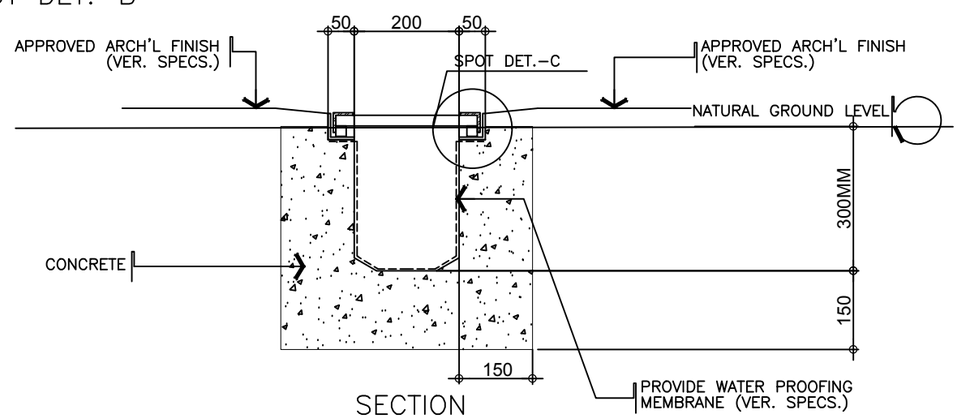

SECTION

DETAILS SECTION OF GRATING CANAL

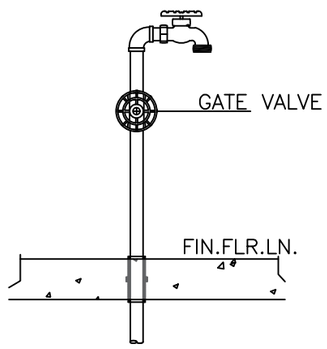

DETAIL OF HOSE BIB

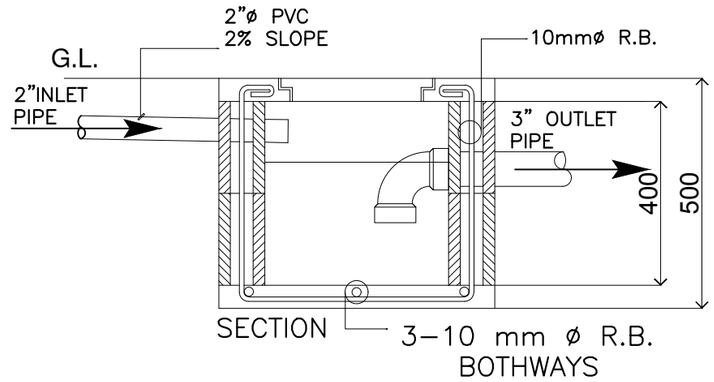

SECTION

GREASE TRAP DETAIL

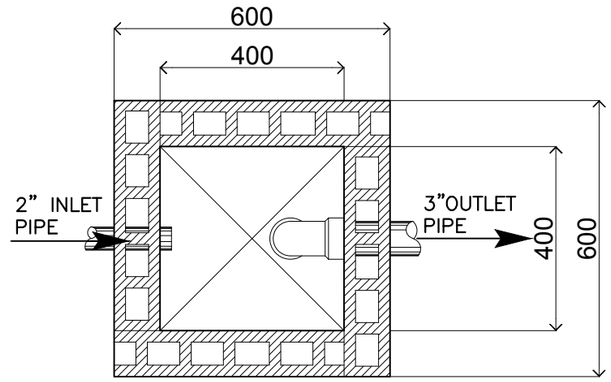

PLAN

REPUBLIC OF THE PHILIPPINES
DEPARTMENT OF SOCIAL WELFARE AND DEVELOPMENT
PRK. BUMANAAG, BRGY.ZONE III, KORONADAL CITY, SOUTH COTABATO, FO XII

PREPARED BY:	RA 9266 SECTION 33	REVIEWED AND VERIFIED BY:	PROJECT TITLE:	APPROVED BY:	SHEET CONTENT	REVISIONS	PROJECT NO.	SHEET NO.
ENGR. CRESSYL ANN E. BANTAYA TECHNICAL FACILITATOR	*Drawings and specifications and other contract documents duly signed, stamped or sealed, as instruments of service, are the intellectual property and documents of the architect, whether the object for which they are made is executed or not. It shall be unlawful for any person to duplicate or make copies of said documents for use in the repetition of and for other projects or buildings, whether executed partly or in whole, without the written consent of the architect or author of said documents.*	ENGR. ROLLY A. TEOFILO PDO IV FOR INFRA	CONSTRUCTION OF 2-UNITS ISOLATION BUIDLING (11-ROOMS)	CEZARIO JOEL C. ESPEJO REGIONAL DIRECTOR DSWD - FIELD OFFICE XII	PLUMBING DETAILS	MARK / DATE	DRAWN BY : CEB	P-300
CHECKED BY:			LOCATION:				DESIGNED BY :	
ENGR. FRANCIS C. ESTOMATA PDO III			RRCY, BRGY. BUKAY PAIT, TANTANGAN, SOUTH COTABATO				DATE : --	
							CHECKED BY : FCE	SCALE: A3 AS SHOWN, A1