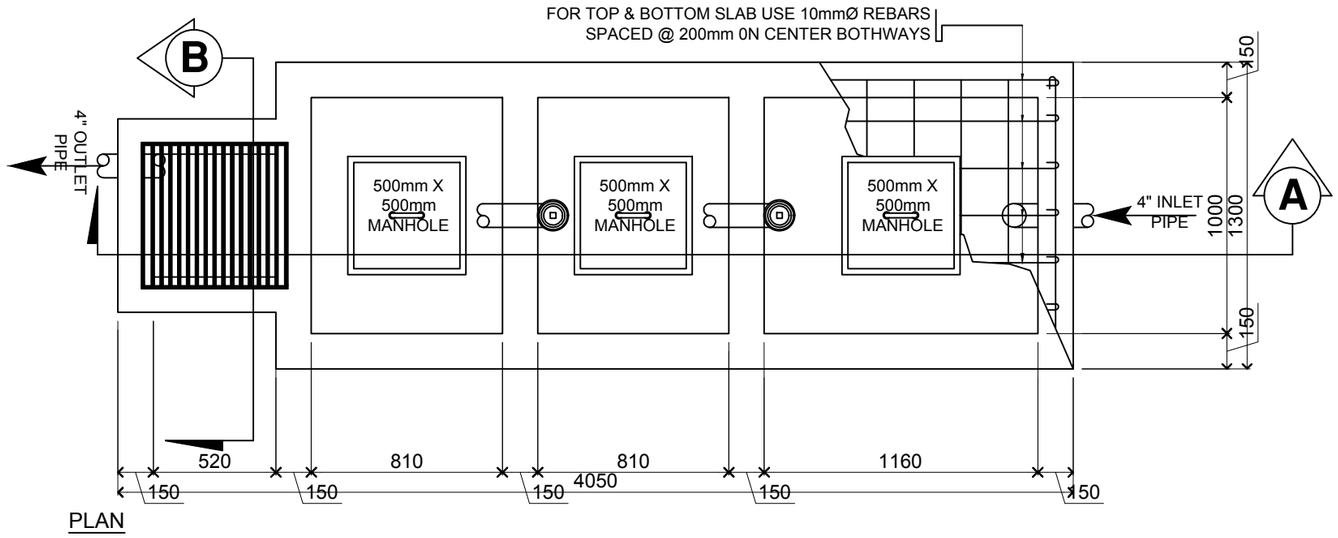

PLAN

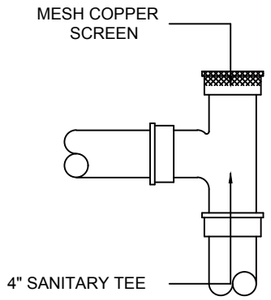

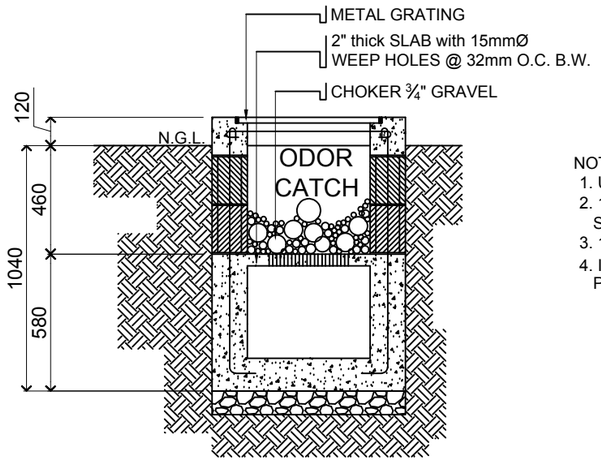

SECTION @ 'B'

NOTE:
1. USE 6" CHB WALL
2. 10mmØ VERTICAL BARS SPACED @ 400mm O.C.
3. 10mmØ HORIZONTAL BARS
4. INSIDE WALL ½" thick. PLASTER FINISH

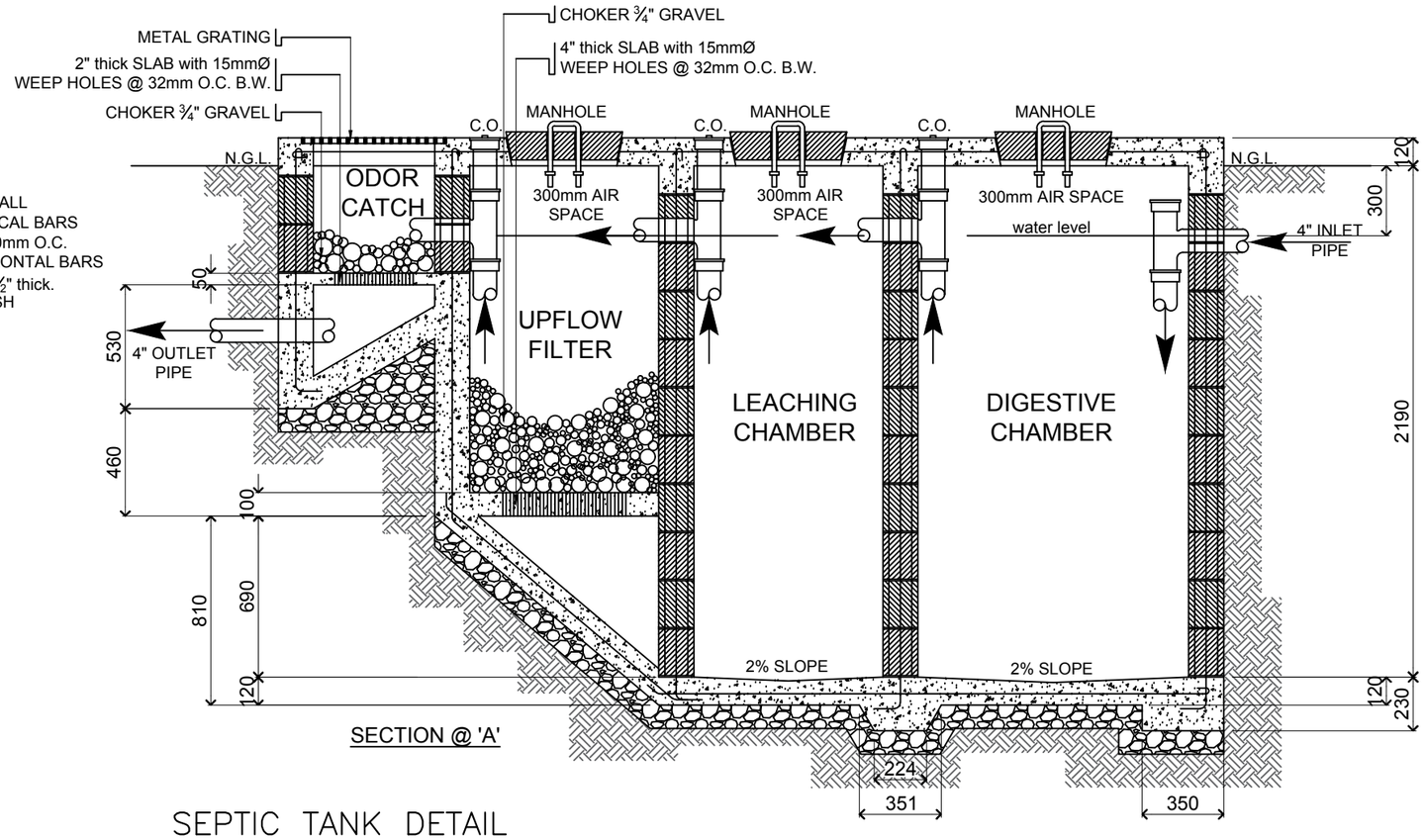

SECTION @ 'A'

SEPTIC TANK DETAIL

REPUBLIC OF THE PHILIPPINES
DEPARTMENT OF SOCIAL WELFARE AND DEVELOPMENT
PRK. BUMANAAG, BRGY.ZONE III,
KORONADAL CITY, SOUTH COTABATO, FO XII

PREPARED BY:	RA 9266 SECTION 33	REVIEWED AND VERIFIED BY:	PROJECT TITLE:	APPROVED BY:	SHEET CONTENT	REVISIONS	PROJECT NO.	SHEET NO.
ENGR. CRESSYL ANN E. BANTAYA TECHNICAL FACILITATOR	*Drawings and specifications and other contract documents duly signed, stamped or sealed, as instruments of service, are the intellectual property and documents of the architect, whether the object for which they are made is executed or not. It shall be unlawful for any person to duplicate or make copies of said documents for use in the repetition of and for other projects or buildings, whether executed partly or in whole, without the written consent of the architect or author of said documents.*	ENGR. ROLLY A. TEOFILO PDO IV FOR INFRA	CONSTRUCTION OF 2-UNITS ISOLATION BUIDLING (11-ROOMS)	CEZARIO JOEL C. ESPEJO REGIONAL DIRECTOR DSWD - FIELD OFFICE XII	SEPTIC TANK DETAIL	MARK / DATE	DRAWN BY : CEB	P-400
CHECKED BY: ENGR. FRANCIS C. ESTOMATA PDO III			LOCATION: RRCY, BRGY. BUKAY PAIT, TANTANGAN, SOUTH COTABATO				DESIGNED BY : DATE : -- CHECKED BY : FCE	SCALE A3 AS SHOWN A1