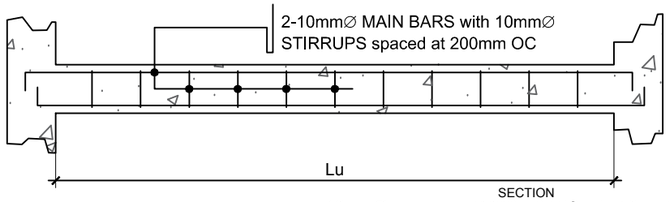

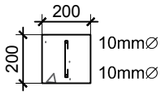

PLAN

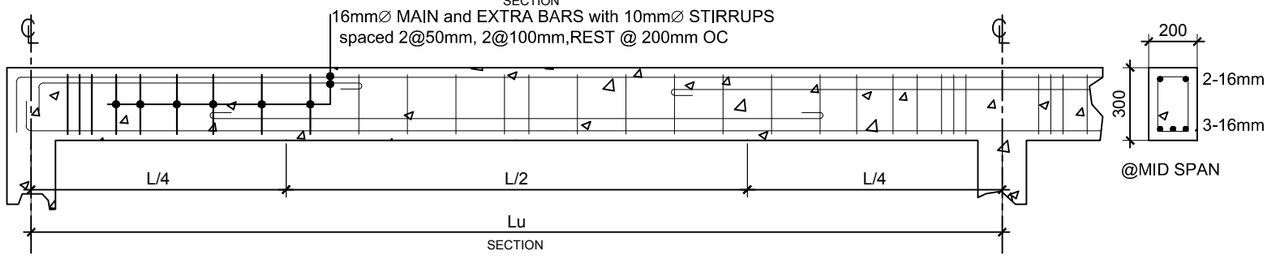

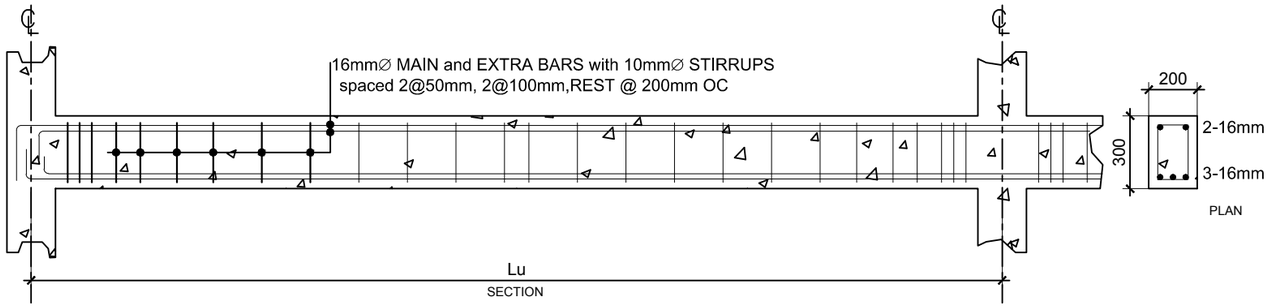

SCHEDULE OF BEAMS

MARK	SIZE (MM) (b x d)	REINFORCEMENT						10ø STIRRUPS
		SUPPORT		MID-SPAN		CANTILEVER		
		TOP	BOT	TOP	BOT	TOP	BOT	
RB-1	200 X 300	SEE BEAM DETAILS						2 @ 50, 2 @ 100, REST @ 200
GB	200 X 300	SEE BEAM DETAILS						

SCHEDULE OF COLUMN FOOTINGS

MARK	SIZE (MM) (L x W x T)	DEPTH (MM) (D)	REINFORCEMENT	
			TRANSVERSE	LONGITUDINAL
F-1	800 X 800 X 200	1000	5-16ø	5-16ø

SCHEDULE OF COLUMNS

LEVEL	MARK	SIZE (MM) (B x H)	REINFORCEMENT		SECTION
			VERT BARS	10ø TIES	
GROUND TO ROOF BEAM	C-1	200 X 300	4-16ø	Spaced at 2 @50; 2 @100 REST AT 200mm OC UP to Mid Height	B, H

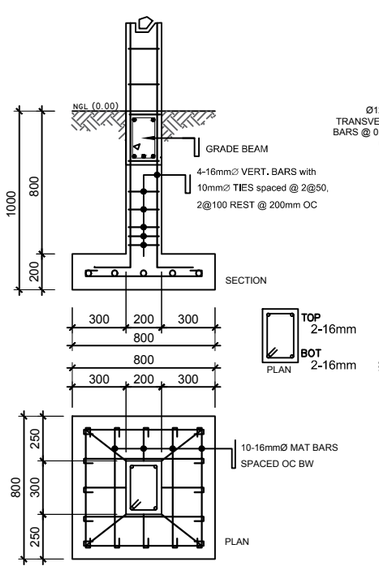

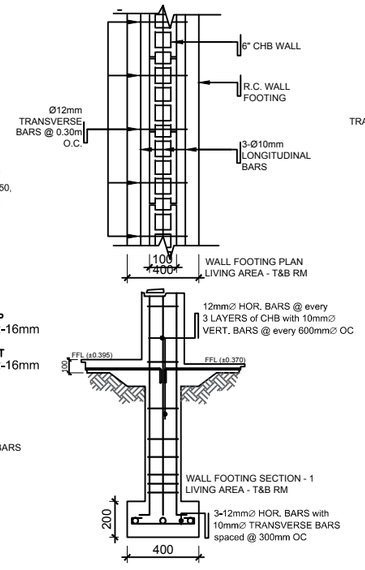

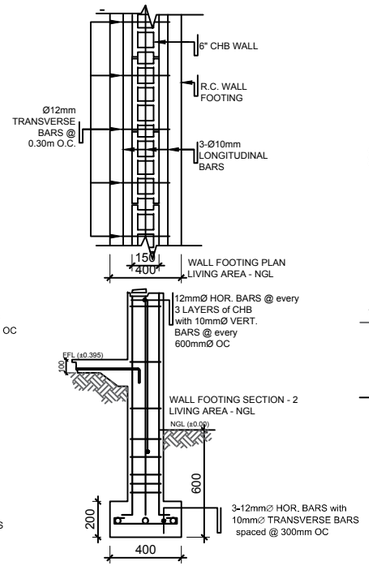

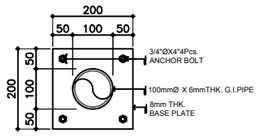

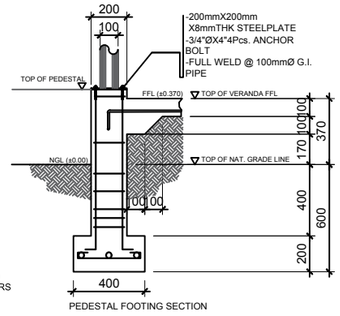

1
S-300

WF-1 DETAILS

SCALE NTS

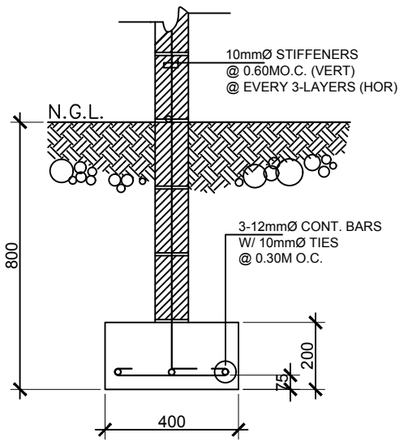

WF-1 SECTION

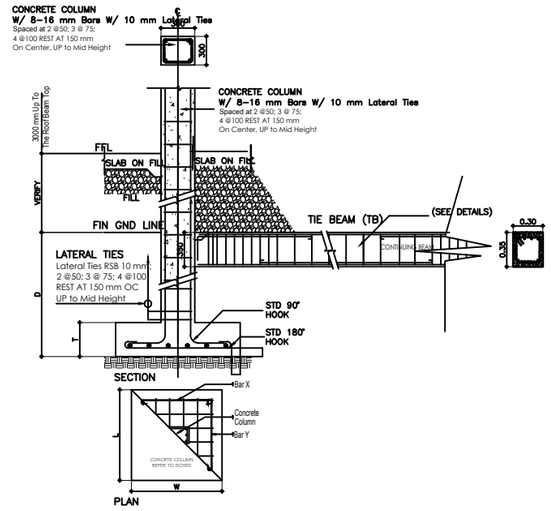

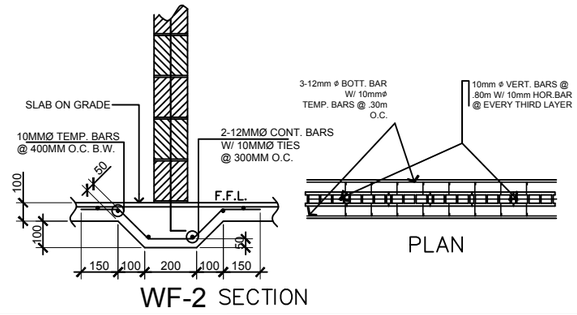

WF-2 SECTION

REPUBLIC OF THE PHILIPPINES DEPARTMENT OF SOCIAL WELFARE AND DEVELOPMENT PRK. BUMANAAG, BRGY.ZONE III, KORONADAL CITY, SOUTH COTABATO, FO XII	PREPARED BY: ENGR. CRESSYL ANN E. BANTAYA TECHNICAL FACILITATOR CHECKED BY: ENGR. FRANCIS C. ESTOMATA PDO III	RA 9266 SECTION 33 *Drawings and specifications and other contract documents duly signed, stamped or sealed, as instruments of service, are the intellectual property and documents of the architect, whether the object for which they are made is executed or not. It shall be unlawful for any person to duplicate or make copies of said documents for use in the repetition of and for other projects or buildings, whether executed partly or in whole, without the written consent of the architect or author of said documents.*	REVIEWED AND VERIFIED BY: ENGR. ROLLY A. TEOFILO PDO IV FOR INFRA	PROJECT TITLE: CONSTRUCTION OF 2-UNITS ISOLATION BUIDLING (11-ROOMS) LOCATION: RRCY, BRGY. BUKAY PAIT, TANTANGAN, SOUTH COTABATO	APPROVED BY: CEZARIO JOEL C. ESPEJO REGIONAL DIRECTOR DSWD - FIELD OFFICE XII	SHEET CONTENT STRUCTURAL DETAILS	REVISIONS MARK DATE

PROJECT NO.		SHEET NO.
DRAWN BY :	CEB	S-300
DESIGNED BY :		
DATE :	--	
CHECKED BY :	FCE	SCALE A3 AS SHOWN A1