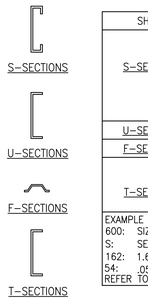

SHAPE	DESIGNATION	FLANGE WIDTH
S-SECTIONS	S125	1.25"
	S137	1.375"
	S162	1.625"
	S200	2"
	S250	2.5"
U-SECTIONS	U50	.50"
F-SECTIONS	F125	1.25"
T-SECTIONS	T125	1.25"
	T150	1.5"
	T200	2"

EXAMPLE CALL OUT: 600S162-54
600: SIZE = 6"
S: SECTION DESIGNATION (STYLE) = S STUD
162: 1.625" FLANGE WIDTH
54: .054" THICKNESS
REFER TO: STEEL STUD MANUFACTURERS ASSOCIATION

STEEL STUD/JOIST SECTION IDENTIFICATION (1)
NTS SS001

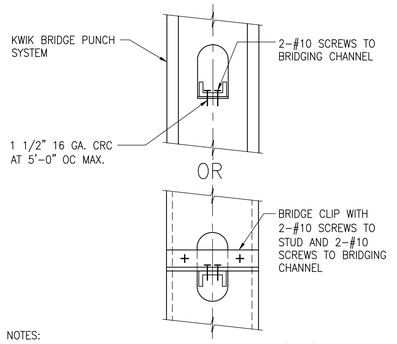

NOTES:
1. SEE STEEL STUD MANUFACTURERS ASSOCIATION (SSMA) FOR BRIDGING REQUIREMENTS AT INTERIOR NON-STRUCTURAL WALLS.

COLD-ROLLED CHAN'L BRIDGING (2)
NTS SS013A

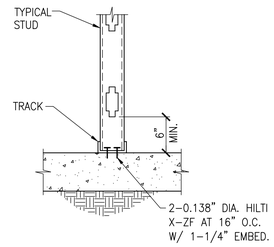

BOTTOM OF WALL AT CONCRETE (3)
NTS SS002

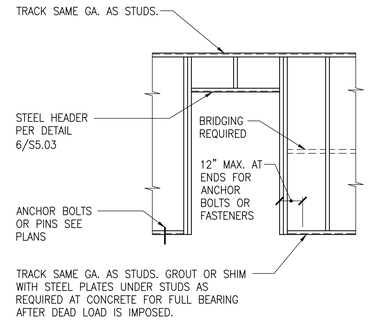

STEEL STUD WALL ELEVATION (4)
NTS

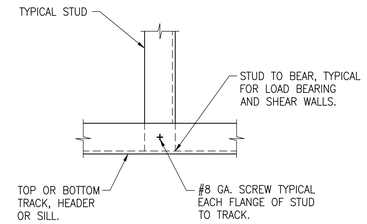

TYPICAL STUD CONNECTION (5)
NTS SS005

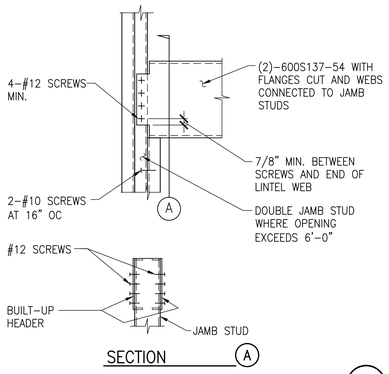

STEEL HEADER (6)
NTS SS007

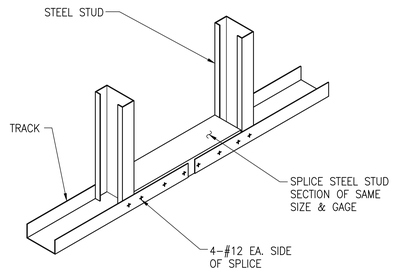

TYPICAL CONTINUOUS TRACK SPLICE (7)
NTS SS010

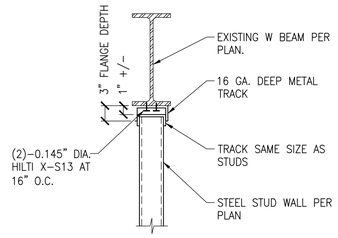

STEEL STUD WALL TO BEAM CONNECTION (8)
NTS

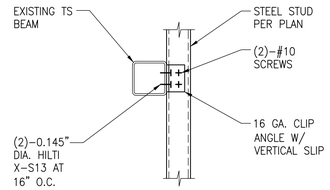

STEEL STUD TO EXISTING BEAM (9)
NTS

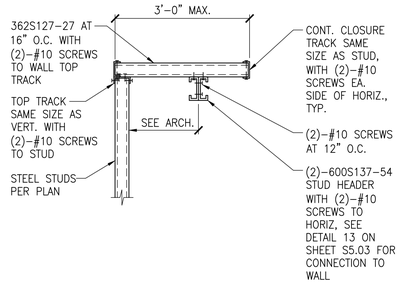

BEVERAGE STATION SOFFIT (10)
NTS

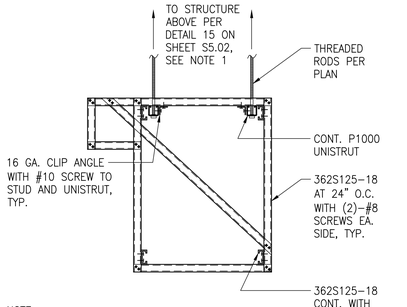

NOTE:
1. WHERE DETAIL 15 ON SHEET S5.03 IS NOT APPLICABLE, USE DETAIL 10 ON SHEET S5.03 WITH CONTINUOUS P5500 UNISTRUT CHANNEL.

SOFFIT SECTION (11)
NTS

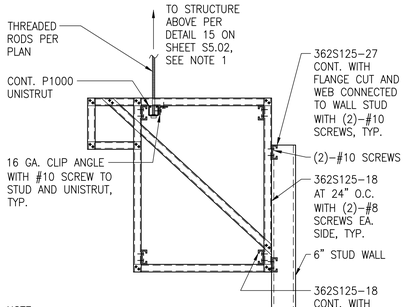

NOTE:
1. WHERE DETAIL 15 ON SHEET S5.03 IS NOT APPLICABLE, USE DETAIL 10 ON SHEET S5.03 WITH CONTINUOUS P5500 UNISTRUT CHANNEL.

SOFFIT SECTION (12)
NTS

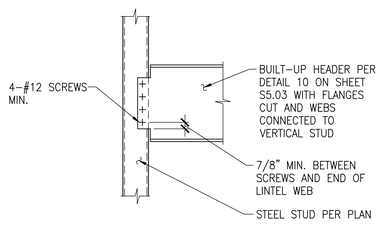

STEEL HEADER (13)
NTS

DWL ARCHITECTS + PLANNERS, INC.
2333 N. Central Ave.
Phoenix, AZ 85004
tel 602.264.9731
dwlarchitects.com

THOMAD Engineering LLC
Structural Engineering Consulting
4535 W. RUSSELL ROAD
SUITE 12
LAS VEGAS, NV 89118
TEL (702) 388-7755
FAX (702) 388-7766
www.thomadengr.com

JOB #: 1111

UNIVERSITY OF NEVADA, LAS VEGAS
ARAMARK - STUDENT DINING
COMMONS ALTERATION
4505 S. MARYLAND PARKWAY
LAS VEGAS, NV. 89119

ARAMARK
Innovative Dining Solutions
ARAMARK CORPORATION
ARAMARK INNOVATION CENTER
WANAMAKER BUILDING, 5th FLOOR
PHILADELPHIA, PA 19107

1 REVISIONS 06/06/11
2 PERMIT REVIEW 06/27/11
3 PERMIT REVIEW 07/08/11

CONSTRUCTION DOCUMENTS

© COPYRIGHT 2011
DWL ARCHITECTS + PLANNERS, INC.

KEY:

SHEET TITLE: STEEL STUD DETAILS

SHEET NUMBER: S5.03

DRAWN BY: EK	REVIEWED BY: SN/MT
DATE: 06/06/11	PROJECT NUMBER: 1101.00