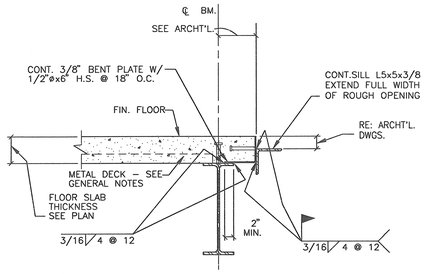

NOTES:
1. PROVIDE CONTINUOUS ELEVATOR SILL ANGLE AT THRESHOLD OF ELEVATOR OPENING. SEE ARCHITECTURAL DRAWINGS FOR LOCATION.

ELEVATOR SILL, COMPOSITE METAL DECK

5 NONE TYPICAL DETAIL

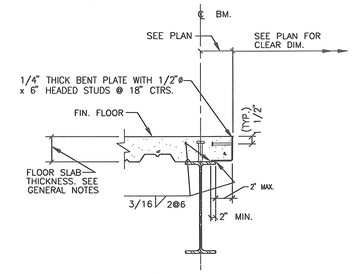

BEAM

NOTE:
1. REFER TO STAIR SHOP DRAWINGS FOR CONNECTION OF STAIR STRINGER TO BEAM.

STEEL STAIR FLOOR LANDING, COMPOSITE METAL DECK, DECK FLUTES PARALLEL TO BEAM OR CHANNEL

4 NONE TYPICAL DETAIL

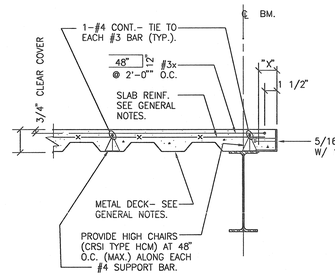

NOTE: THIS DETAIL DOES NOT APPLY WHEN DISTANCE "X" EXCEEDS 0'–5". THIS DETAIL APPLIES AT INTERIOR OPENING ONLY.

COMPOSITE METAL DECK CLOSURE DECK SPAN PARALLEL TO BEAM

3 NONE TYPICAL DETAIL

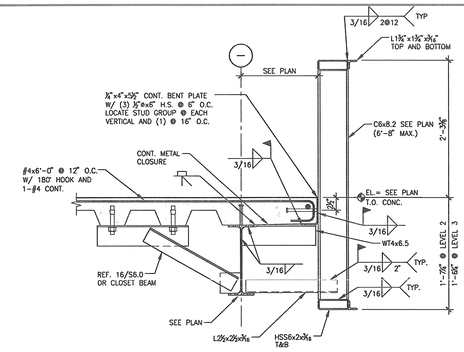

NOTE: COORD. LOCATION AND ELEVATION OF WALL BRACE ASSEMBLY W/ ARCH'L.

TYPICAL SLAB EDGE DETAIL

2 N.T.S. DETAIL

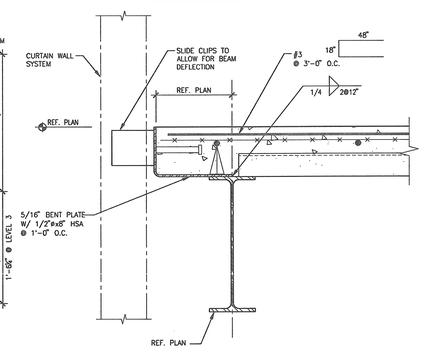

TYPICAL SLAB EDGE DETAIL

1 1 1/2"=1'-0" DETAIL

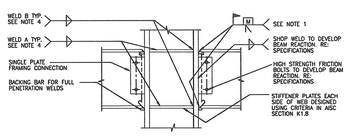

NOTES:
1. UNLESS NOTED OTHERWISE ON PLAN OR SCHEDULE, DESIGN MOMENT CONNECTION FOR MOMENT M=0.66FyS_x. PROVIDE FULL PENETRATION WELDS AT FLANGES UNLESS PARTIAL PENETRATION WELD IS ADEQUATE TO DEVELOP THE SCHEDULED DESIGN MOMENT.
2. BEAM FLANGE FORCE Pbf USED IN AISC FORMULA K1–9 SHALL BE COMPUTED AS FOLLOWS:
   A. WHEN DESIGN MOMENT IS NOT SHOWN: Pbf = 1.10 $F_y S_x$/0.95d
   B. WHEN DESIGN MOMENT IS SHOWN: Pbf = M/0.95d
   WHERE: F_y= BEAM YIELD STRENGTH (KSI) M= DESIGN MOMENT (KIP–IN)
   S_x= BEAM SECTION MODULUS (IN^3) d= BEAM DEPTH (INCHES)
3. Pbf SHALL BE LARGER VALUE COMPUTED FOR EACH BEAM AT CONNECTION.
4. WELDS A AND B SHALL BE DESIGNED TO DEVELOP THE FOLLOWING FORCES:
   WELD A – (STIFFENER TO COLUMN WEB) Pa = 1.20 A_{st} F_{yst}
   WELD B – (STIFFENER TO COLUMN FLANGE) Pb = 0.60 A_{st} F_{yst}
   WHERE: A_{st} = AREA OF STIFFENER PLATE (IN^2)
   F_{yst} = YIELD STRENGTH OF STIFFENER PLATE (KSI)
5. FULL OR PARTIAL PENETRATION WELDS SHOULD BE USED FOR WELDS A AND B IN LIEU OF FILLET WELDS IF REQUIRED.
6. BOLTS IN WEB CONNECTION SHALL BE TIGHTENED PRIOR TO WELDING OF FLANGES.
7. WHERE STIFFENERS ARE INDICATED IN THE DETAIL BUT NOT REQUIRED FOR STRENGTH, PROVIDE STIFFENERS WITH MINIMUM WIDTH AND THICKNESS AS REQUIRED BY AISC SPECIFICATION SECTION K1.8.
8. THIS DETAIL DOES NOT DIRECTLY APPLY TO COLUMNS WITH MOMENT CONNECTIONS IN TWO PERPENDICULAR DIRECTIONS.

STL BEAM TO COLUMN FLNG MOM. CONNX. BMS OF SAME NOM DEPTH

10 NTS DETAIL

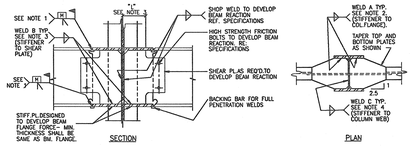

NOTES:
1. UNLESS NOTED OTHERWISE ON PLAN OR SCHEDULE, DESIGN MOMENT CONNECTION FOR MOMENT M=0.66 $F_y S_x$. PROVIDE FULL PENETRATION WELD AT FLANGES UNLESS PARTIAL PENETRATION WELD IS ADEQUATE TO DEVELOP THE SCHEDULED DESIGN MOMENT.
2. WELD A SHALL BE DESIGNED TO DEVELOP THE FOLLOWING FORCE:
   A. WHEN DESIGN MOMENT IS NOT SHOWN: Pa = 1.32 $F_y S_x$/0.95d
   B. WHEN DESIGN MOMENT IS SHOWN: Pa = 2.0M/0.95d
   WHERE F_y= BEAM YIELD STRENGTH (KSI) M= DESIGN MOMENT (KIP–IN)
   S_x= SECTION MODULUS OF LARGER BEAM IN CONNECTION (IN^3) d= BEAM DEPTH (INCHES)
   NOTE THAT ONE HALF TOTAL FORCE Pa SHALL BE DEVELOPED INTO EACH COLUMN FLANGE.
3. WELD B SHALL BE DESIGNED TO DEVELOP THE FOLLOWING FORCE:
   Pb = .40 F_{ysp} x t x L WHERE: F_{ysp} = YIELD STRENGTH OF SHEAR PLATE (KSI)
   t = THICKNESS OF SHEAR PLATE (INCHES)
   L = LENGTH OF SHEAR PLATE (INCHES)
4. WELD C SHALL BE DESIGNED TO DEVELOP THE FOLLOWING FORCE:
   a. WHEN DESIGN MOMENT IS NOT SHOWN: Pc = .66$F_y S_x$/.95d
   b. WHEN DESIGN MOMENT IS SHOWN IN WIND BEAM SCHEDULE: Pc = M/.95d
   REFER TO NOTE 2 FOR DEFINITION OF TERMS.
5. FULL OR PARTIAL PENETRATION WELDS SHOULD BE USED FOR WELDS A, B & C IN LIEU OF FILLET WELDS IF REQUIRED.
6. BOLTS IN WEB CONNECTION SHALL BE TIGHTENED PRIOR TO WELDING OF FLANGES.
7. THIS DETAIL DOES NOT DIRECTLY APPLY TO COLUMNS WITH MOMENT CONNECTIONS IN TWO PERPENDICULAR DIRECTIONS.

STL BM TO WIDE FLNG COL WEB MOM CONNX BMS OF SAME DEPTH

9 NTS DETAIL

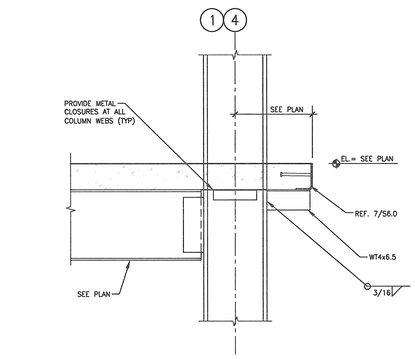

TYPICAL SLAB EDGE AT COLUMN

8 1"=1'-0" DETAIL

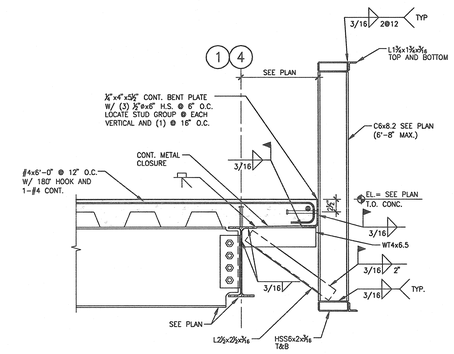

TYPICAL SLAB EDGE DETAIL

7 1"=1'-0" DETAIL

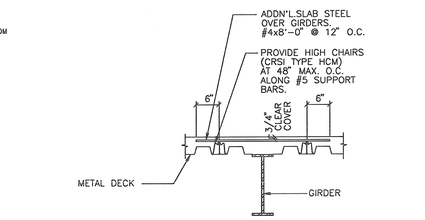

INTERIOR GIRDER

NOTE:
1. PROVIDE ADDITIONAL SLAB REINFORCEMENT OVER GIRDERS AS SHOWN IN ADDITION TO TYPICAL SLAB TEMPERATURE REINFORCEMENT. SEE GENERAL NOTES.

REINFORCED STEEL SUPPORT COMPOSITE GIRDER METAL DECK

6 N.T.S. DETAIL

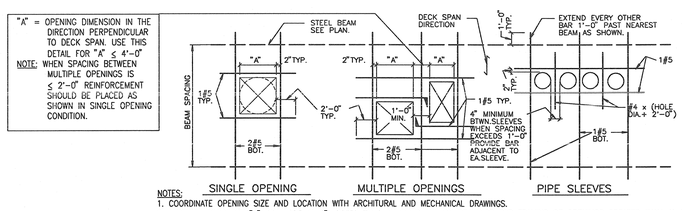

NOTES:
1. COORDINATE OPENING SIZE AND LOCATION WITH ARCHITURAL AND MECHANICAL DRAWINGS.
2. MAXIMUM DIMENSION "A" SHALL BE 4'–0". REFER TO PLAN OR DETAIL ON DRAWINGS FOR FRAMING OF OPENINGS GREATER THAN 4'–0".
3. WWF SLAB REINFORCEMENT SHALL BE CUT AROUND SLAB OPENING. WWF SHALL EXTEND TO 2" OF OPENING ON ALL SIDES.
4. OPENING 10" AND SMALLER DO NOT REQUIRE ADDITIONAL REINFORCEMENT.
5. FIELD CUT OPENINGS IN DECK AFTER CONCRETE SLAB HAS BEEN POURED AND HAS ATTAINED MINIMUM 75% OF ITS SPECIFIED 28 DAY COMPRESSIVE STRENGTH.
6. REINFORCEMENT PERPENDICULAR TO DECK SPAN SHALL BE PLACED ON TOP OF DECK FLUTES.
7. REINFORCEMENT PARALLEL TO DECK SPAN SHALL BE PLACED IN THE LOWER FLUTE AND SHALL BE CHAIRED TO PROVIDE 3/4" COVER.
8. THIS DETAIL SHOWS TYPICAL CONDITIONS. VERIFY REINFORCING STEEL PLACEMENT WITH ENGINEER FOR SPECIAL CASES.
9. PROVIDE REINFORCEMENT AS SHOWN FOR SQUARE, RECTANGULAR OR ROUND OPENINGS.

TYPICAL DETAIL OPENINGS IN COMPOSITE METAL DECK SLAB, FLOOR OR ROOF

15 DETAIL

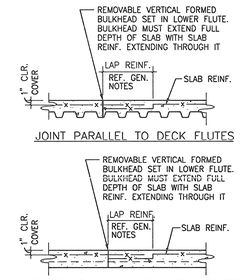

NOTES:
1. CONSTRUCTION JOINTS PARALLEL TO DECK FLUTES SHALL BE LOCATED NO CLOSER THAN 5'–0" FROM THE CENTERLINE OF THE NEAREST GIRDER.
2. CONSTRUCTION JOINTS PERPENDICULAR TO DECK FLUTES SHALL BE LOCATED AT THE CENTER OF THE METAL DECK SPAN.
3. AT THE CONTRACTOR'S OPTION, PREFORMED PERMANENT METAL SHEAR KEY FOLLOWING CONTOUR OF METAL DECK FLUTES MAY BE USED WITH SLAB REINF. STOPPING EACH SIDE AND #3 DOWELS x 2'–0" CENTERED @ 18"–0" O.C.

CONSTRUCTION JOINT CONCRETE SLAB ON METAL DECK

13 SCALE: N.T.S. DETAIL

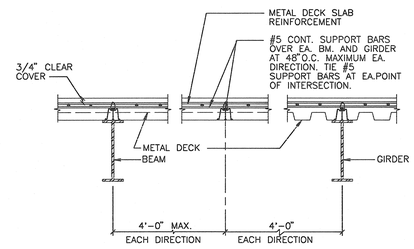

NOTES:
1. SEE GENERAL NOTES FOR METAL DECK SLAB TEMPERATURE REINFORCEMENT.
2. PROVIDE CONTINUOUS #5 REINFORCING BAR SUPPORTS OVER EACH BEAM, BEAM, GIRDER AND AT 48" ON CENTER MAXIMUM IN EACH DIRECTION. TIE #5 BARS TOGETHER AND PROVIDE HIGH CHAIR SUPPORT AT EACH INTERSECTION POINT. CHAIRS SHALL BE MANUFACTURED FOR SUPPORT ON METAL DECK (CRSI TYPE HCM). TIE METAL DECK SLAB REINFORCEMENT TO SUPPORT BARS AT 48" ON CENTER IN EACH DIRECTION.

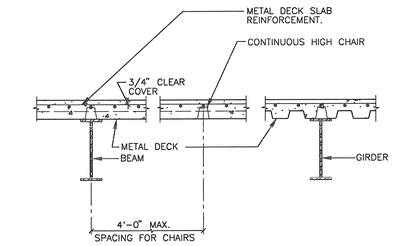

NOTES:
1. SEE GENERAL NOTES FOR METAL DECK SLAB TEMPERATURE REINFORCEMENT.
2. CONTINUOUS HIGH CHAIRS SHALL BE MANUFACTURED FOR SUPPORT ON METAL DECK (CRSI TYPE CHCM) AND PLACED OVER EACH BEAM AND GIRDER AND AT A MAXIMUM SPACING OF 48" ON CENTER.

TYPICAL DETAIL: TEMPERATURE STEEL SUPPORT COMPOSITE METAL DECK SLABS

12 N.T.S. DETAIL

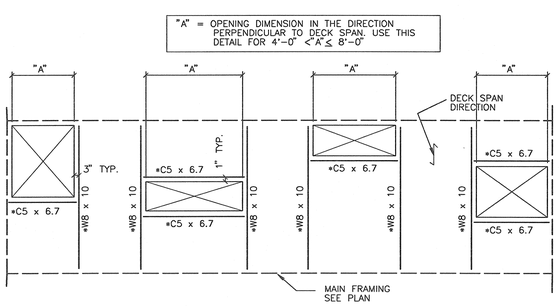

NOTE:
1. COORDINATE OPENING SIZE AND LOCATIONS WITH ARCHITECTURAL AND MECHANICAL DRAWINGS.
2. THIS DETAIL SHOWS TYPICAL OPENINGS CONFIGURATIONS. VERIFY FRAMING WITH ENGINEER FOR SPECIAL CASES.
3. REFER TO ENGINEER FOR FRAMING IF DIMENSION "A" EXCEEDS 8'–0"
4. DECK MANUFACTURE TO PROVIDE 14 GAGE METAL DECK EDGE CLOSURE AROUND EACH OPENING UNLESS DETAILED OTHERWISE

FRAMED OPENINGS IN FLOOR OR ROOF

20 TYPICAL DETAIL

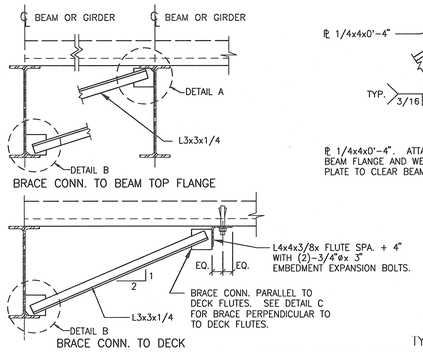

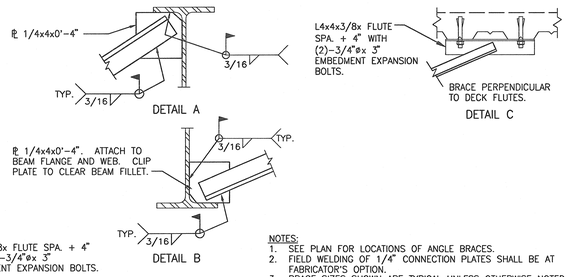

NOTES:
1. SEE PLAN FOR LOCATIONS OF ANGLE BRACES.
2. FIELD WELDING OF 1/4" CONNECTION PLATES SHALL BE AT FABRICATOR'S OPTION.
3. BRACE SIZES SHOWN ARE TYPICAL UNLESS OTHERWISE NOTED ON PLAN.
4. SEE GENERAL NOTES FOR DECK CONSTRUCTION.

TYPICAL DETAIL BEAM BOTTOM FLANGE BRACE (COMPOSITE CONSTRUCTION)

18 DETAIL

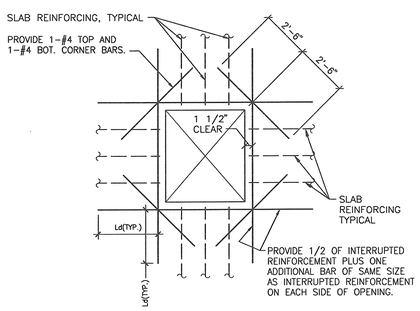

OPENING IN CONCRETE SLAB, FLOOR OR ROOF

16 NTS DETAIL

M.E. RINKER, Sr. SCHOOL OF BUILDING CONSTRUCTION

M.E. RINKER, Sr. HALL
SCHOOL OF BUILDING CONSTRUCTION

UNIVERSITY OF FLORIDA-GAINESVILLE
PROJECT NO. BR-191

ARCHITECTS
CROXTON COLLABORATIVE/ GOULD EVANS ASSOCIATES

CROXTON COLLABORATIVE ARCHITECTS
475 FIFTH AVENUE
NEW YORK, NY 10017
TEL 212.683.1998
FAX 212.683.2799

GOULD EVANS ASSOCIATES
5405 WEST CYPRESS STREET
TAMPA, FL 33607
TEL 813.288.0729
FAX 813.288.0231

MECHANICAL ENGINEERS
LEHR ASSOCIATES
130 WEST 30TH STREET
NEW YORK, NY 10001–4092
TEL 212.947.8050
FAX 212.967.2059

STRUCTURAL ENGINEERS
WALTER P. MOORE AND ASSOCIATES, INC.
Florida Engineering Business No. 3818
201 EAST KENNEDY BOULEVARD
TAMPA, FL 33602
TEL 813.221.2424
FAX 813.221.2289

CIVIL ENGINEERS
BROWN & CULLEN, INC.
3530 NW 43 STREET
GAINESVILLE, FL 32605
TEL 352.375.8999
FAX 352.375.0833

LANDSCAPE ENGINEERS
McCLAIN DESIGN GROUP, INC.
1843 NW 39 DRIVE
GAINESVILLE, FL 32605
TEL 352.372.2808
FAX 352.375.6622

CONSULTANT
SEEGY-BISCH
AUSSERE SULZBACHER STR. 118
NURNBERG, GERMANY
TEL 0911/59 90 99
FAX 0911/59 98 05

THIS DRAWING, AS AN INSTRUMENT OF SERVICE, IS AND SHALL REMAIN, PROPERTY OF CROXTON COLLABORATIVE ARCHITECTS. THIS DRAWING SHALL NOT BE REPRODUCED, PUBLISHED, USED ON OTHER PROJECTS, USED FOR ADDITIONS, OR USED IN COMPLETION OF THIS PROJECT BY OTHERS EXCEPT BY AGREEMENT IN WRITING. © 2001 CROXTON COLLABORATIVE ARCHITECTS/ GOULD EVANS ASSOCIATES.

NO.	ISSUE/REVISION	DATE

100% CONSTRUCTION DOCUMENTS

DRAWING NAME
TYPICAL FRAMING DETAILS

DATE 11-21-01
SCALE AS NOTED
DRAWN BY/CHECKED BY LMR/JLD
DRAWING NUMBER S6.0