CONTROLLING SG90 SERVO MOTOR ROTATION USING A FLEX SENSOR

INTRODUCTION

We electronically measure the bending angle of a flex sensor and use that measurement to control the rotation angle of an SG90 servo motor via an ESP32 microcontroller. This creates an actuation system where the bending of the sensor translates into a corresponding motion of the servo, useful in robotics, prosthetics, wearable devices, and interactive interfaces.

The method uses an analog voltage from the sensor, read by the ESP32's ADC, then mapped to a PWM command for the servo.

COMPONENTS REQUIRED

Component	Quantity
ESP32 Development Board	1
Flex Sensor	1
SG90 Servo Motor	1
Resistors (e.g., 10 kΩ)	1
Breadboard & Jumper Wires	Assorted

WORKING PRINCIPLE

A flex sensor is a resistive type sensor whose electrical resistance increases as it bends.

INTERFACING FLEX SENSOR WITH ESP 32

Circuit Connection

1. Connect one end of the flex sensor to 3.3 V supply from the ESP32.
2. Connect the other end to an analog input pin (e.g., GPIO 36).
3. Place a 10 kΩ resistor between the analog pin and GND forming a voltage divider.

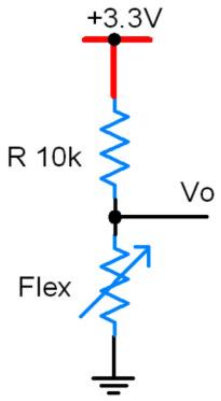

This setup converts the change in resistance due to bending into a change in analog voltage.

Flex Sensor Characteristics

- At straight position (0° bending), the resistance is low (approx. 32.5 kΩ).
- At a 45° angle, this resistance is approximately 55K.
- At a 90° angle, this resistance is approximately 80K.

This variable resistance can be converted into a variable voltage using a voltage divider circuit. A stable resistor (e.g., 10 kΩ) is connected in series with the sensor, and the midpoint is fed to the ESP32's ADC pin to measure voltage, which corresponds to the degree of bend.

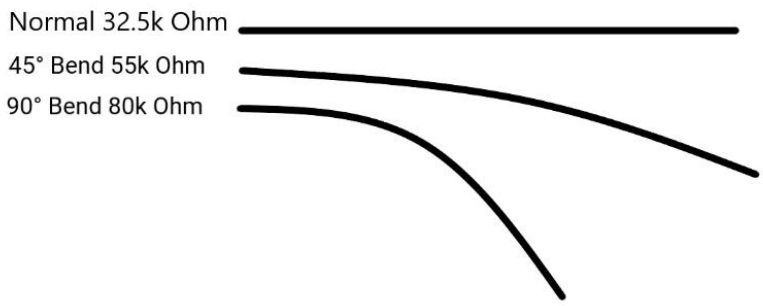

The simple voltage divider equation required to measure the voltage across the flex resistor is given as,

$$V_O = V_{CC} \times (R_{FLEX} / (R + R_{FLEX}))$$

At R_{FLEX} = 32.5 kΩ,

$$V_O = 3.3 \times (32.5k / (10k + 32.5k))$$

$$V_O = 2.523 \text{ V}$$

At R_{FLEX} = 55 kΩ

$$V_O = 3.3 \times (55k / (10k + 55k))$$

$$V_O = 2.792 \text{ V}$$

At R_{FLEX} = 80kΩ

$$V_O = 3.3 \times (80k / (10k + 80k))$$

$$V_O = 2.933 \text{ V}$$

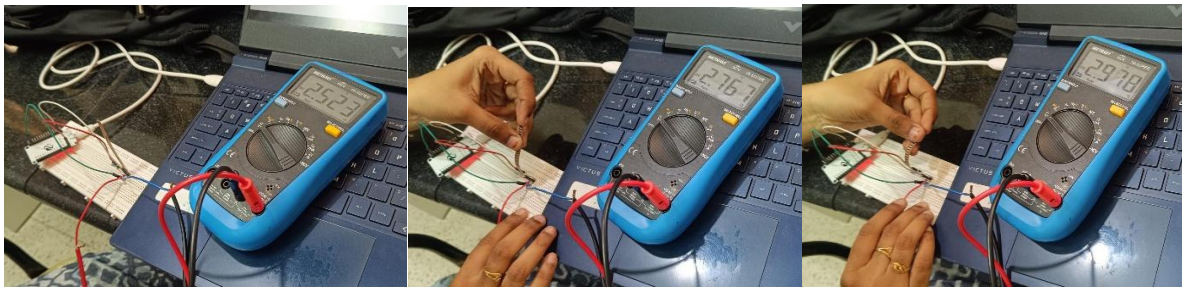

SG90 Servo Motor: Operation and Control

An SG90 servo motor is a small DC motor with an internal positional feedback mechanism controlled by PWM signals. The rotation angle of the servo is determined by the width of the PWM pulse applied to its signal pin (GPIO 18).

How PWM Controls Servo Angle

- A PWM pulse of ~1 ms width positions the servo near 0°.
- A pulse of ~1.5 ms positions it near 90° (center).
- A pulse of ~2 ms positions it near 180°.
- The typical pulse frequency is 50 Hz (20 ms period).

This variation in pulse width within a fixed period allows the servo to hold a precise angle.

CIRCUIT DIAGRAM

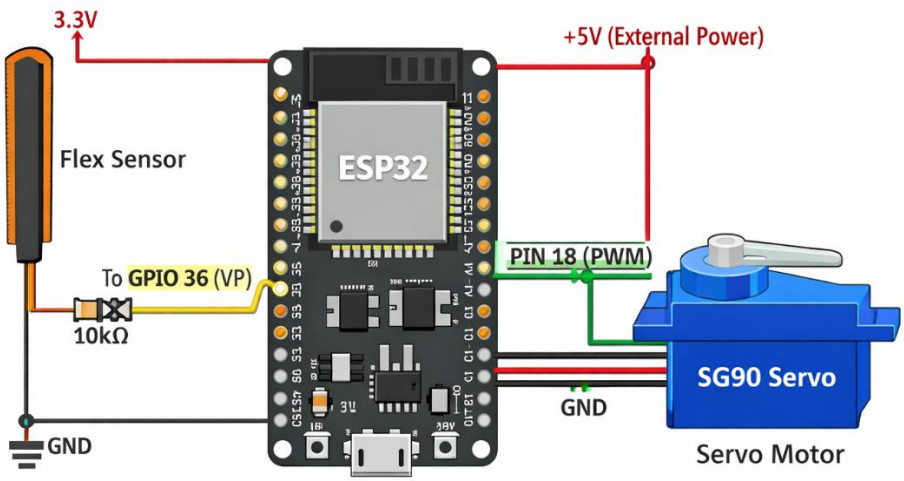

SOFTWARE IMPLEMENTATION

The software has two major parts:

- Reading the flex sensor analog value
- Mapping that value to a servo angle and controlling the servo

→ The flex sensor reading is taken from the ADC pin (GPIO 36)

→ The raw sensor value (range typically depends on ADC resolution) is linearly mapped to an angle range 0° – 180° (GPIO 18).

→ The mapped angle is then sent as a command to the servo using the Servo library.

The suitable Arduino IDE code compatible to the ESP 32 is run to make such mapping.

SENSOR INTERFACING CIRCUIT

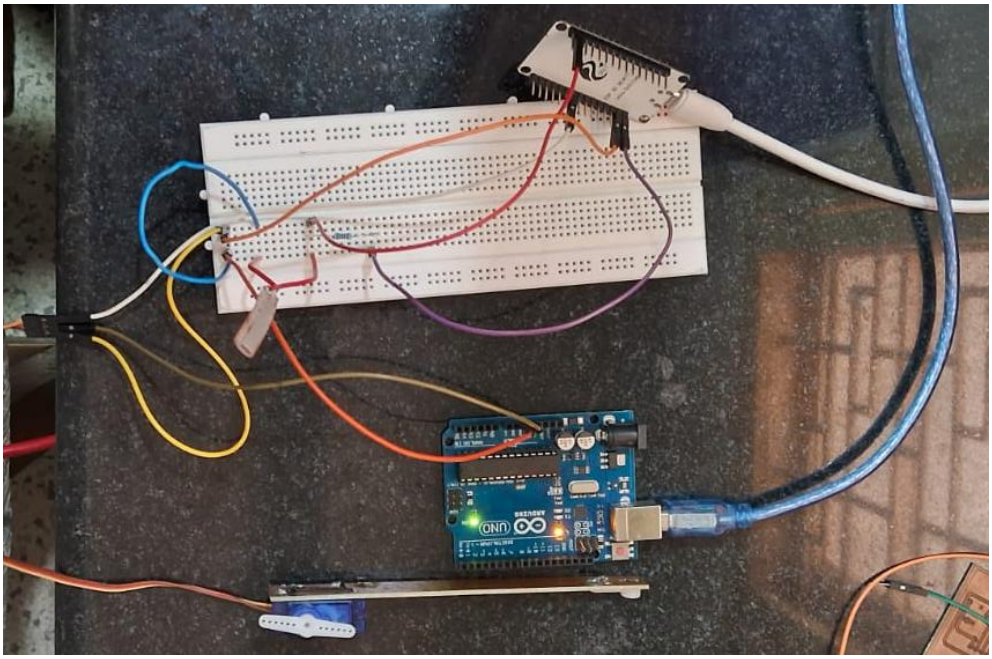

OBSERVATION

Flex Bend (approx)	Sensor ADC Value	Servo Angle
0° (straight)	Low	~0°
Mid bend (~45°)	Mid	~90°
Full bend (~90°)	High	~180°

Exact ADC ranges will vary depending on resistors and the sensor.

When the sensor is straight, the servo remains near 0°, and as the sensor bends, the servo progressively rotates toward 180°.