INTRODUCTION TO 5G NETWORK ARCHITECTURE

The fifth-generation (5G) mobile communication system represents a significant evolution in cellular network design, aiming to support ultra-high data rates, ultra-low latency, massive device connectivity, and flexible service deployment. Unlike legacy cellular systems, 5G adopts a service-based and cloud-native architecture, where network functions are virtualized and deployed dynamically.

In the Signaltron 5G Use Case Labs, the architecture integrates the Sahyadri series gNodeB, a cloud-native 5G Core running Niral OS, and a Multi-Access Edge Computing (MEC) server. This combined architecture enables local data processing at the edge of the network, thereby reducing latency, optimizing bandwidth usage, and improving overall system efficiency for real-time applications.

5G SYSTEM ARCHITECTURE

The overall 5G architecture consists of three major segments:

- User Equipment (UE)
- Radio Access Network (RAN)
- 5G Core Network (5GC)

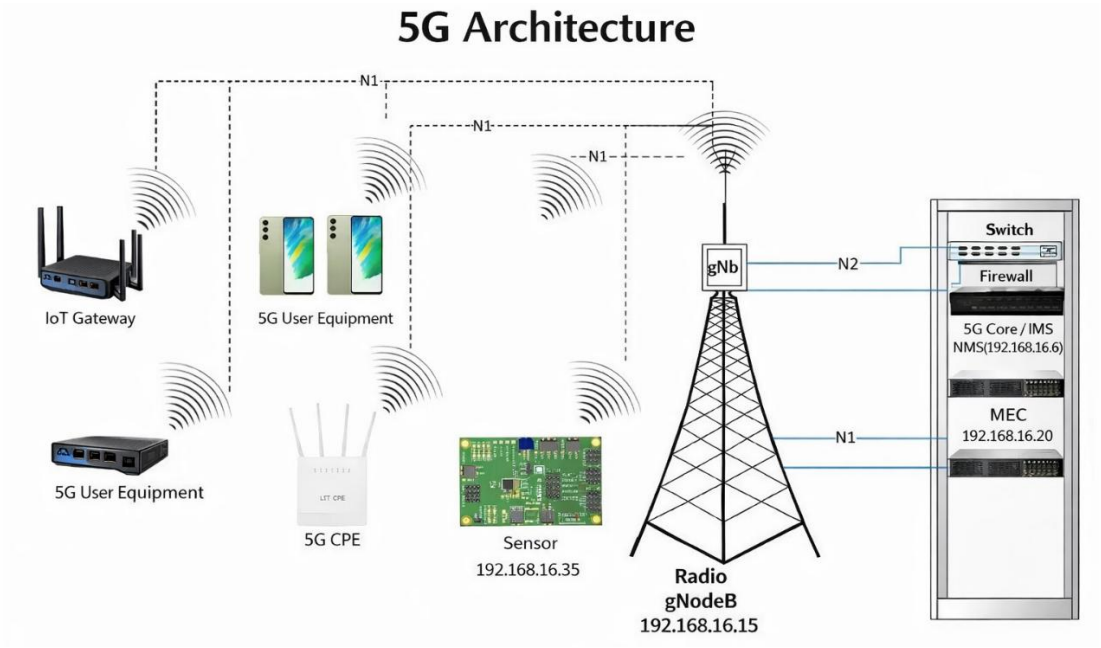

The UE includes various 5G-enabled devices such as smartphones, laptops connected through 5G MiFi routers, IoT gateways, drones, cameras, and evaluation boards connected to environmental sensors such as flex, temperature, light, soil moisture, and water and sensors. These devices communicate with the network through the 5G New Radio (NR) air interface.

RADIO ACCESS NETWORK (RAN) – SAHYADRI gNodeB

The RAN is implemented using the Sahyadri gNodeB, which acts as the base station and operates in the N77/N78 frequency bands around 3.5 GHz. These mid-band frequencies provide a balance between coverage and throughput, making them suitable for campus and laboratory deployments.

The Sahyadri gNodeB performs essential radio functions such as radio resource management, scheduling, mobility handling, and transmission of control and user data. It establishes two primary interfaces with the 5G Core: the N2 interface for control-plane signaling and the N3 interface for user-plane data.

Control and User Plane Interfaces

The N2 interface carries signaling messages related to mobility management, session control, and authentication between the gNodeB and the Access and Mobility Management Function (AMF).

The N3 interface carries actual user data encapsulated using GTP-U tunnels between the gNodeB and the User Plane Function (UPF). These interfaces ensure a clear separation between control signaling and user data traffic, which is a key design principle of 5G architecture.

INTRODUCTION TO MULTI-ACCESS EDGE COMPUTING (MEC)

A major enhancement in the Signaltron 5G deployment is the integration of Multi-Access Edge Computing (MEC). MEC brings cloud computing capabilities closer to the user by placing compute and storage resources at the edge of the cellular network, typically co-located with the 5G Core.

The need for MEC arises due to the stringent performance requirements of emerging 5G applications. Applications such as autonomous robotics, augmented and virtual reality, real-time video analytics, and industrial automation require response times below 10 milliseconds.

Need and Benefits of MEC

Processing data at centralized cloud data centers introduces significant propagation delays, whereas MEC eliminates this delay by processing data locally. Additionally, MEC optimizes bandwidth usage by processing high-volume data such as video streams locally, thereby reducing backhaul congestion.

From a security perspective, MEC ensures that sensitive data remains within local premises such as campuses, factories, or laboratories, avoiding exposure to public networks.

SIGNALTRON MEC ARCHITECTURE AND DATA FLOW

In the Signaltron architecture, the MEC server hosts both the 5G Core network functions and the edge applications. The architecture follows the ETSI MEC framework and is optimized for local breakout through the User Plane Function.

The UPF is deployed directly on the MEC server, making it the central element responsible for traffic steering. When user data arrives from the gNodeB over the N3 interface, the UPF inspects the traffic and determines whether it is destined for a local MEC application or an external data network.

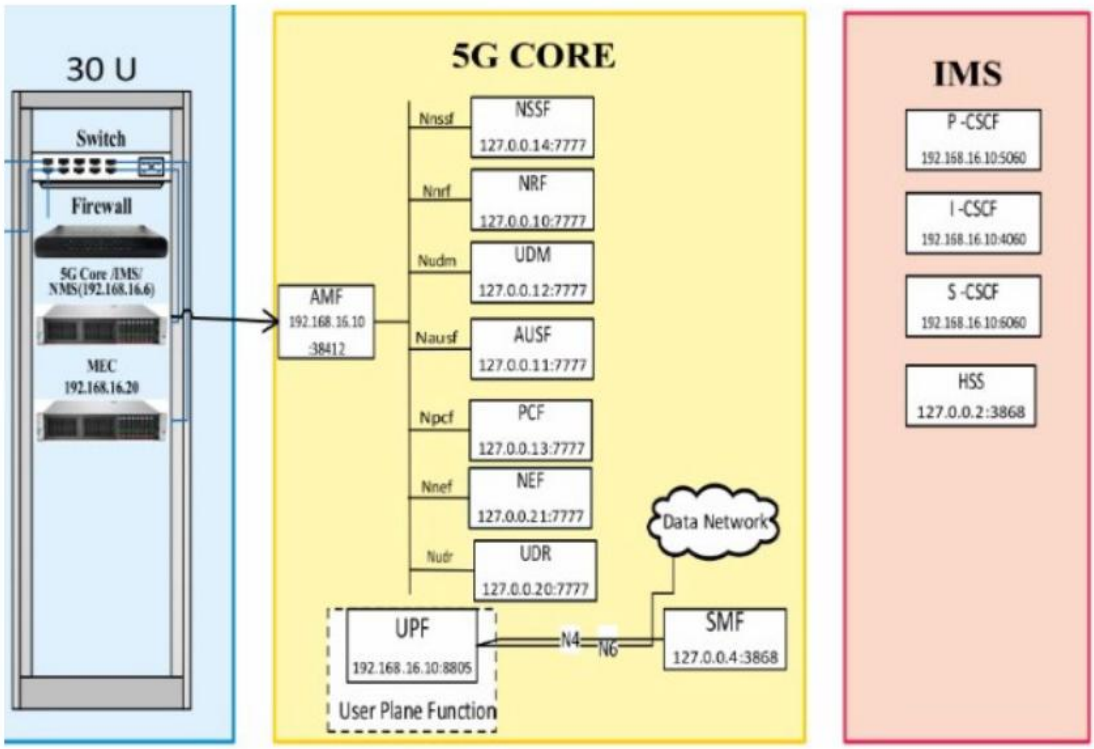

Local and External Data Routing via UPF

Traffic intended for local processing is routed internally via the N6 interface to containerized MEC applications. Traffic that does not require edge processing is forwarded to the external or internal data network through the same N6 interface.

5G CORE NETWORK (NEXT GENERATION CORE – NGC)

The 5G Core Network, also referred to as the Next Generation Core (NGC), follows a service-based architecture where each network function operates as an independent service. The control plane and user plane are logically separated to enhance scalability and flexibility.

Functions of 5G Core Network Elements

The AMF is responsible for user registration, connection management, mobility handling, and security context management. Authentication is performed with the help of the Authentication

Server Function (AUSF) and the Unified Data Management (UDM), which stores subscriber profiles and credentials.

The Session Management Function (SMF) manages PDU session establishment and selects an appropriate UPF for data handling. The Policy Control Function (PCF) defines quality-of-service and policy rules, while the Network Slice Selection Function (NSSF) determines the appropriate network slice for each UE.

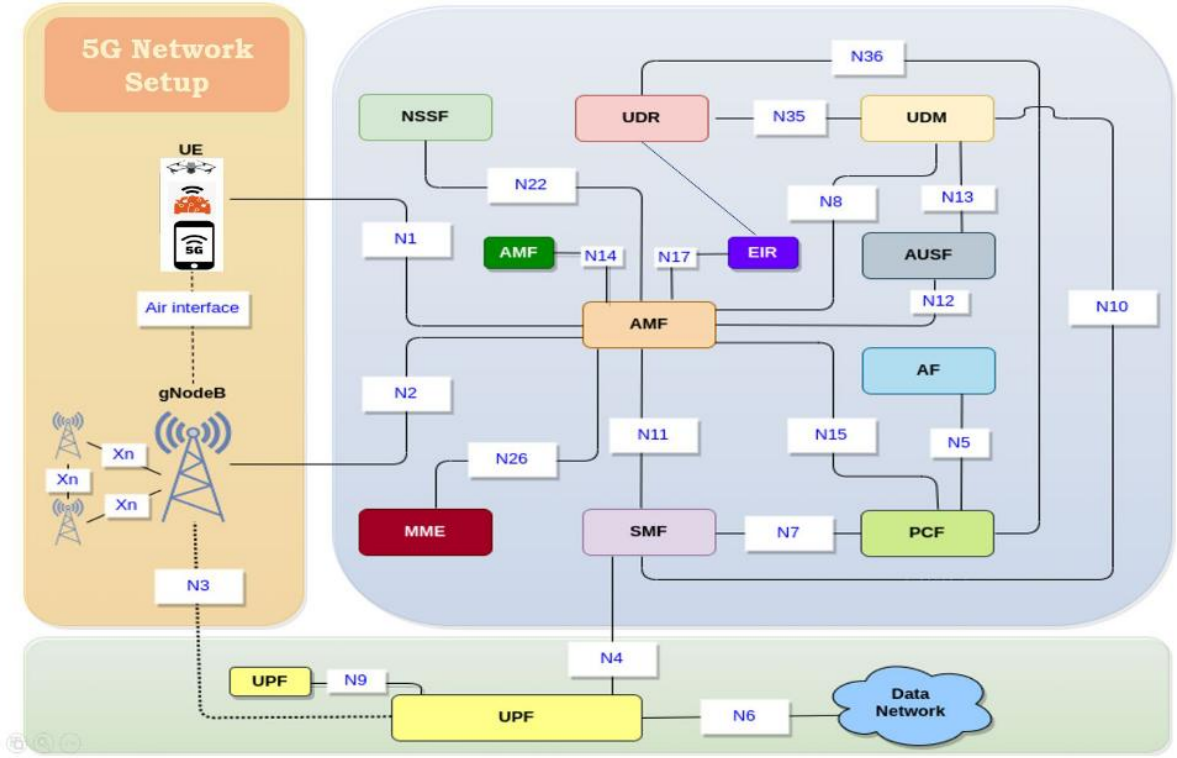

Supporting Core Network Functions

Supporting functions such as the Network Repository Function (NRF), Unified Data Repository (UDR), and Application Function (AF) enable service discovery, data storage, and application-level interactions with the core.

5G Core Network Interfaces

Communication between these network functions is achieved using standardized interfaces such as N1, N2, N3, N4, N6, N7, N11, N14, N15, and N17. The N1 interface handles Non-Access Stratum (NAS) signaling between the UE and AMF.

The N2 interface connects the gNodeB and AMF for control signaling, while the N3 interface carries user data between the gNodeB and UPF. The N4 interface allows the SMF to control the UPF using PFCP messages, and the N6 interface connects the UPF to external data networks or local MEC applications.

Interface	Name	Description	Connected Nodes
N1	NAS	Between User Equipment (UE) and Access and Mobility Management Function (AMF). Handles non-radio signalling (NAS).	UE and AMF
N2	NG-C	Between gNB (Next-Generation NodeB) and AMF.	gNB and AMF
N3	NG-U	Between gNB and User Plane Function (UPF).	gNB and UPF
N4	PFCP	Between Control Plane (CP) elements (e.g., SMF) and UPF.	SMF and UPF
N5	Policy	Between User Data Management (UDM) & Policy Control Function (PCF).	UDM and PCF
N7	Policy/AF	Between Policy Control Function (PCF) and Application Function (AF).	PCF and AF
N11	SM Signaling	Between AMF and Session Management Function (SMF).	AMF and SMF
N14	Inter-AMF	Between AMF and Network Slice Selection Function (NSSF).	AMF and NSSF
N15	Auth/Policy	Between AMF and Authentication Server Function (AUSF).	AMF and AUSF
N17	Repository	Between AMF and Unified Data Repository (UDR).	AMF and UDR
N22	Analytics	Between AMF and NWDAF (Network Data Analytics Function).	AMF and NWDAF
N26	Interworking	Enables interworking between 5G and 4G networks (eNB/gNB).	5G gNB and 4G eNB

Hardware and Network Interfaces in MEC Server

The MEC server utilizes multiple high-speed network interfaces to interconnect different domains of the network. The N3 interface typically uses a 10G SFP+ fiber connection to carry high-throughput user data.

The N2 interface uses a Gigabit Ethernet connection for control signaling. The N6 interface is implemented internally using an Open vSwitch (OVS) to route traffic between the UPF and

containerized applications. A separate management interface connects the MEC server to the campus or external LAN using an RJ45 Ethernet connection.

Heartbeat and Network Monitoring

A heartbeat mechanism continuously monitors synchronization between the radio unit and the core network, ensuring reliable operation and high availability in laboratory environments.

MEC Platform Management using NMS

Management of the Signaltron MEC platform is performed through a centralized web-based dashboard provided by Niral OS. This dashboard enables administrators to monitor system metrics such as CPU utilization, memory usage, disk I/O, and network throughput in real time.

Traffic Steering and Network Slicing

Traffic steering rules can be configured to direct specific UEs, applications, or network slices to designated MEC applications. For example, traffic from a particular 5G MiFi device can be assigned to a high-priority slice for performance evaluation. This capability demonstrates practical implementation of network slicing and quality-of-service control in a real 5G environment.

MEC APPLICATIONS

Containerized MEC Applications

All MEC applications in the Signaltron architecture are deployed as Docker containers or Kubernetes pods. Containerization ensures isolation between the 5G Core functions and user applications, preventing interference and improving system stability.

Common MEC Applications

Common MEC applications include an Iperf3 server used to measure throughput, latency, and jitter over the 5G air interface, and video processing services such as Nginx-RTMP that receive video streams from 5G cameras for local transcoding or AI-based object detection.

EXPERTIMENTAL SETUP AND MEASUREMENT TOOLS

To validate the architecture, an experimental setup is established using real 5G devices and measurement tools. User Equipment includes laptops connected via 5G MiFi routers, smartphones, and 5G evaluation boards.

The Sahyadri radio unit is typically mounted at an elevated height, such as 4.5 meters, to ensure clear line-of-sight for 3.5 GHz signals.

Network Performance Analysis

Wireshark is used on the MEC server to capture and analyze packet flows, verify GTP-U encapsulation, and observe signaling over N2 and N3 interfaces. The NMS dashboard is used to monitor radio performance metrics such as RSRP and RSRQ.

5G STANDALONE (SA) CALL FLOW PROCEDURES

Initial Access and RRC Connection

The functional working of the 5G Standalone (SA) system begins with the initial access and RRC connection establishment. The UE searches for a nearby gNodeB and initiates a random-access procedure by transmitting a preamble over the Physical Random Access Channel (PRACH).

The gNodeB responds with a Random Access Response, allocating uplink resources and timing advance. A basic signaling connection is established using Signaling Radio Bearer 0 (SRB0), followed by the establishment of SRB1 during the RRC Connection Setup procedure.

NAS Registration Procedure

Following RRC establishment, the UE initiates the registration procedure at the NAS layer by sending a Registration Request message. The gNodeB forwards this message to the AMF.

Authentication and Security Establishment

The AMF performs authentication by interacting with the AUSF and UDM, verifying the UE's credentials using secure authentication vectors. NAS-level security is established through Security Mode Command and Complete messages, followed by Access Stratum security between the UE and gNodeB.

Policy Control and Subscriber Management

The AMF retrieves subscriber information from the UDM, registers itself as the serving AMF, and establishes policy associations with the PCF.

PDU Session Establishment

Once registration is successful, the PDU session establishment procedure begins. The AMF communicates with the SMF to establish a data session. The SMF selects an appropriate UPF and configures it using PFCP messages.

Data Radio Bearer and Session Completion

The gNodeB establishes a Data Radio Bearer (DRB) through RRC Reconfiguration, and the AMF sends a Registration Accept message to the UE. After the UE responds with Registration Complete, uplink and downlink data transfer begins.

End-to-End Data Flow and MEC Offloading

At this stage, the UPF inspects incoming traffic and either routes it to local MEC applications or forwards it to the external data network, completing the end-to-end 5G data flow.