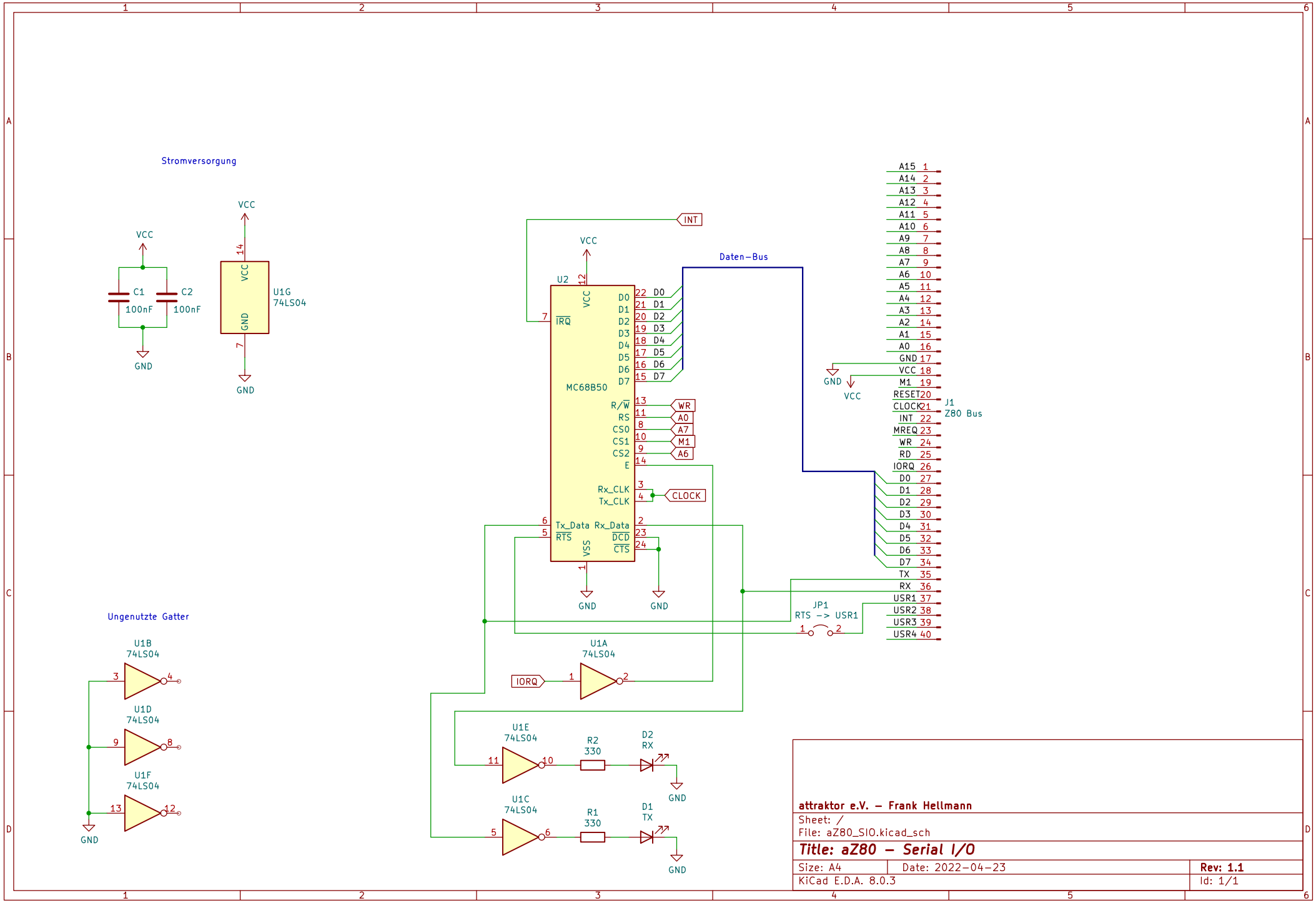
Stromversorgung
VCC
C1
100nF
C2
100nF
GND
U1G
74LS04
Ungenutzte Gatter
U1B
74LS04
U1D
74LS04
U1F
74LS04
U2
MC68B50
Daten-Bus
INT
WR
A0
A7
M1
A6
CLOCK
IORQ
U1A
74LS04
U1E
74LS04
R2
330
D2
RX
U1C
74LS04
R1
330
D1
TX
JP1
RTS -> USR1
J1
Z80 Bus
attraktor e.V. – Frank Hellmann
Sheet: /
File: aZ80_SIO.kicad_sch
Title: aZ80 – Serial I/O
Size: A4
Date: 2022-04-23
Rev: 1.1
KiCad E.D.A. 8.0.3
Id: 1/1