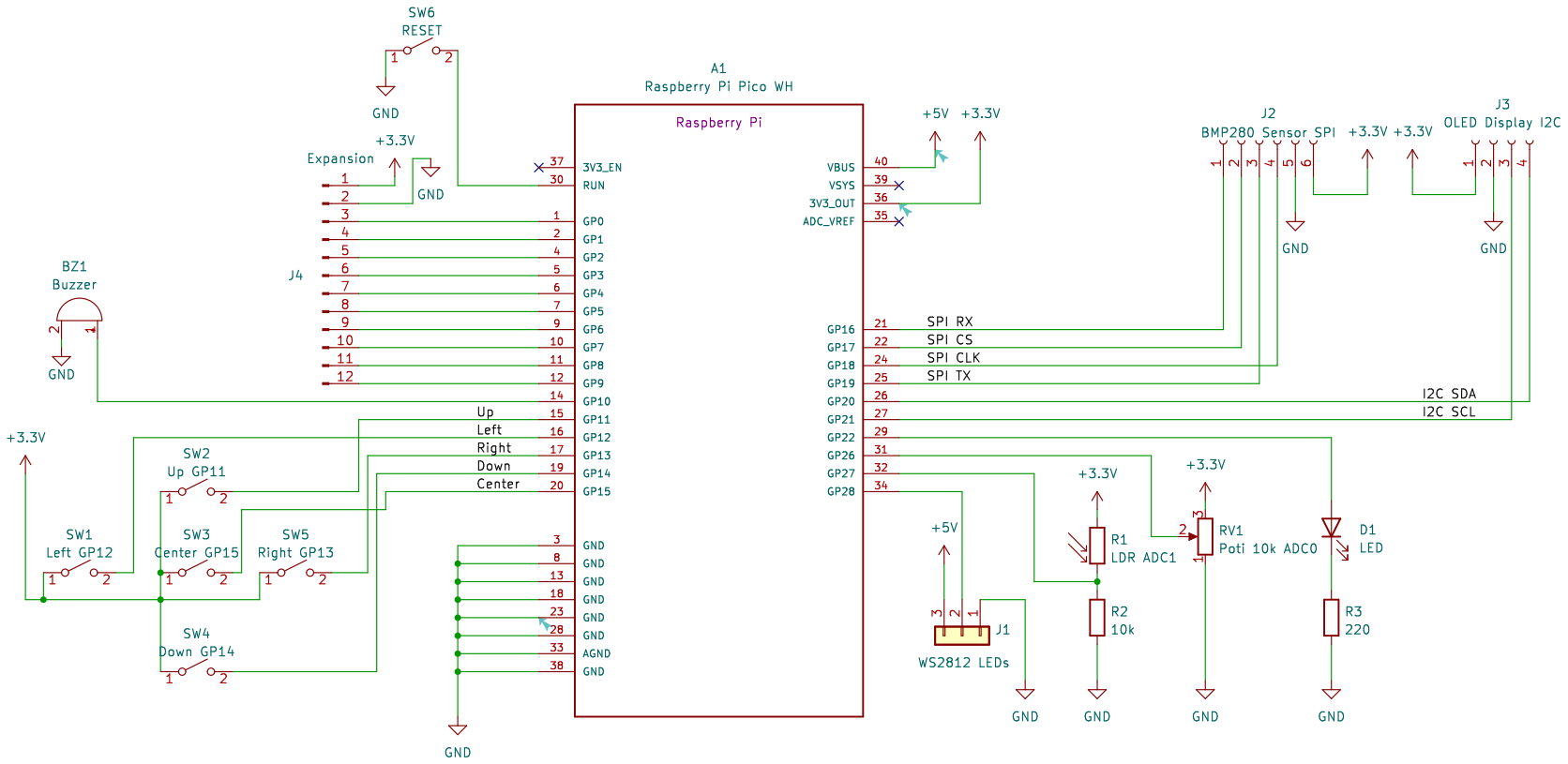

Attraktor e.V. – F. Hellmann

Sheet: /
File: MicroPython_DemoBoard.kicad_sch

www.attraktor.org

Title: MicroPython Demoboard V1.0

Size: A4	Date: 2023-11-06	Rev: 1.0
KiCad E.D.A. kicad 7.0.8		Id: 1/1