LEGO TECHNIC

42165

LEGO® Builder

Get excited about our new packaging!

We're switching from plastic to paper-based packaging. That's why you might find a mix of paper and plastic in our boxes!

Nos nouveaux emballages vous emballeront !

Nous passons des emballages en plastique aux emballages à base de papier. C'est pourquoi vous pourriez trouver un mélange de papier et de plastique dans nos boîtes !

¡Te presentamos nuestros nuevos empaques!

Estamos sustituyendo las bolsas de plástico por bolsas con base de papel. ¡Por eso, puedes encontrar una mezcla de papel y de plástico en nuestras cajas!

LEGO.com/sustainable-packaging

BUILDER

Download on the App Store | GET IT ON Google Play | 腾讯应用宝 安卓应用商店

Apple and the Apple logo are trademarks of Apple Inc., registered in the U.S. and other countries and regions. App Store is a service mark of Apple Inc. Google Play and the Google Play logo are trademarks of Google LLC. Tencent and the Tencent logo are trademarks of Tencent Inc.

LEGO.com/devicecheck

LEGO® Builder

EN Ask parents' permission before going online I **DE** Eltern um Erlaubnis bitten, bevor du online gehst I **FR** Demande l'autorisation d'un parent avant d'aller en ligne I **IT** Chiedi il permesso ai tuoi genitori prima di andare online I **ES** Pídeles permiso a tus papás antes de conectarte a Internet I **PT** Pede autorização aos pais antes de acederes online I **ZH** 上网前应先征得父母的同意 I **PL** Poproś rodziców o zgodę, zanim wejdziesz do Internetu I **CS** Než půjdeš na internet, požádej rodiče o svolení I **SK** Skôr než pôjdeš na internet, vypýtaj si povolenie od rodičov I **HU** Kérj szülői engedélyt, mielőtt online csatlakoznál! I **RO** Cere permisiunea părinților înainte de a te conecta online I **BG** Поискайте разрешение от родител, преди да влезете онлайн I **LV** Pirms došanās tiešsaistē palūdz atļauju vecākiem I **ET** Enne Interneti kasutamist küsi vanematelt luba I **LT** Prieš prisijungdami prie interneto, atsiklauskite tėvų

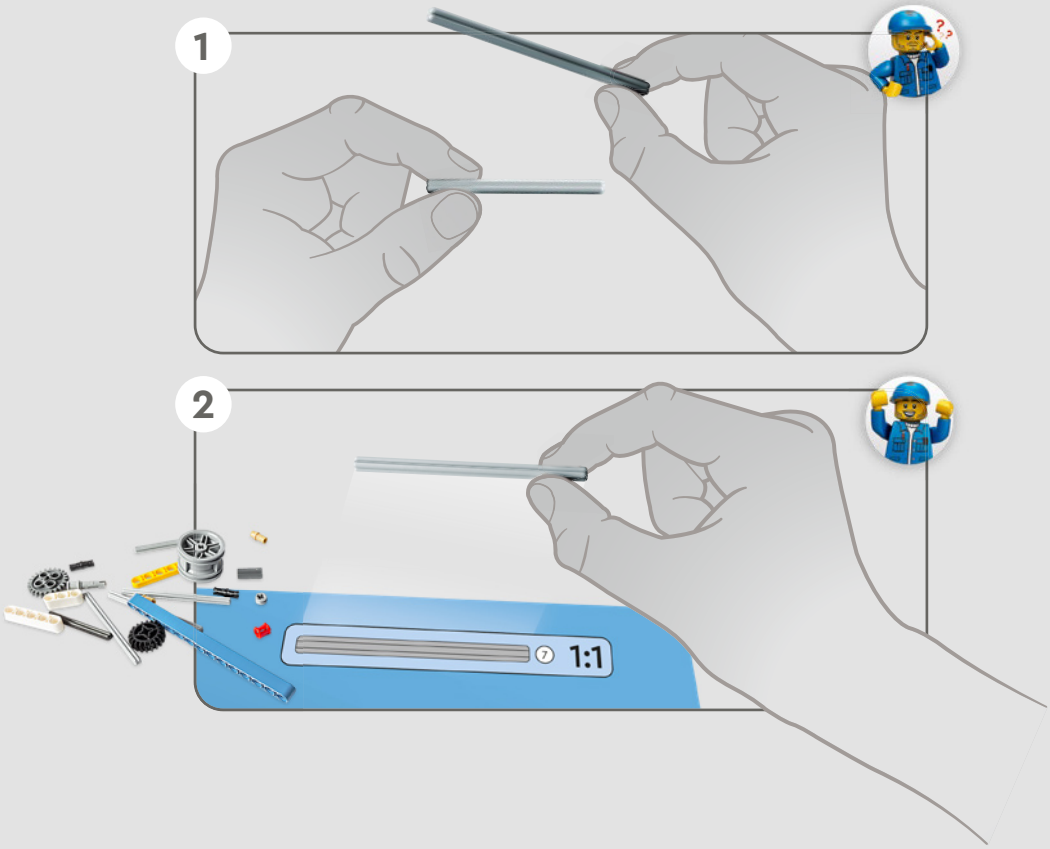
1
2
7
1:1

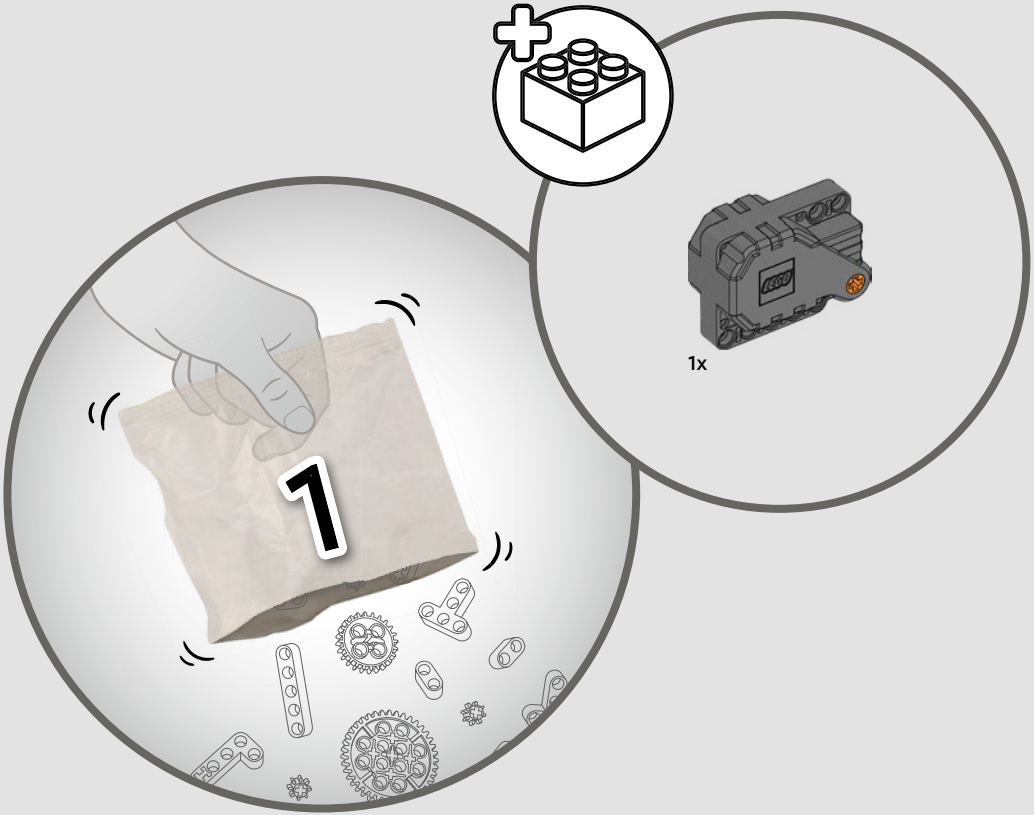
1
1x

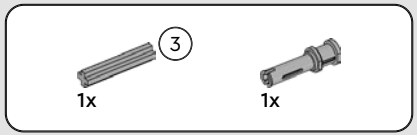

1

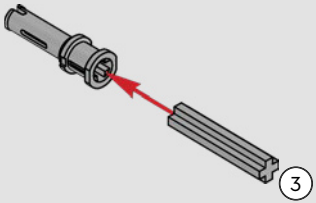

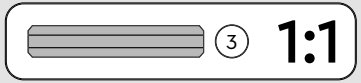

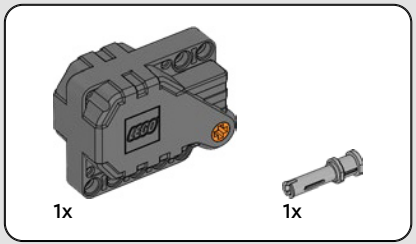

2

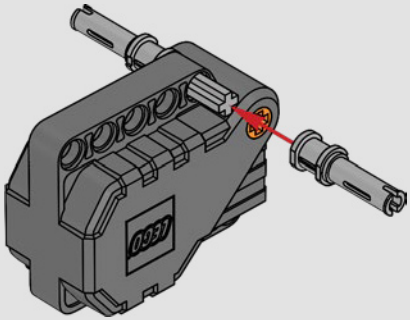

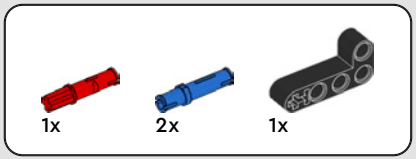

3

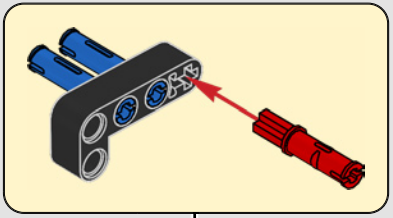

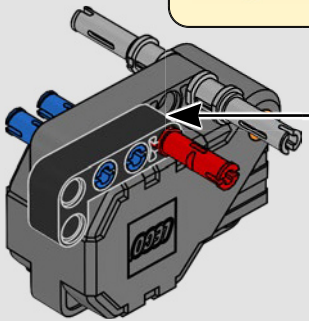

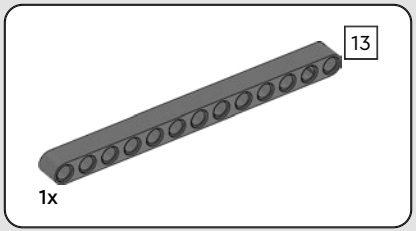

4

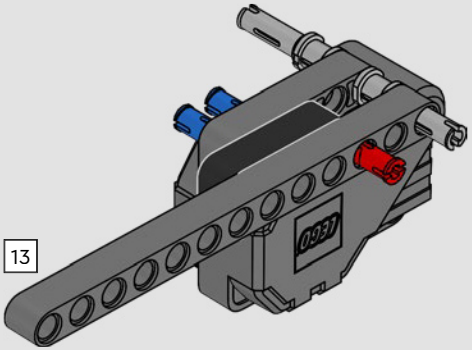

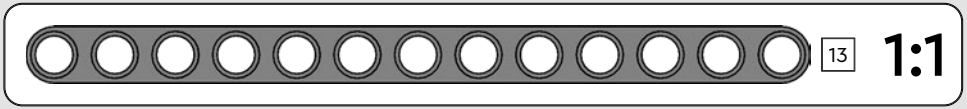

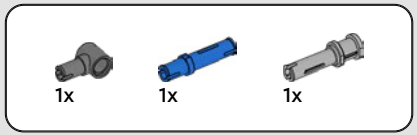

5

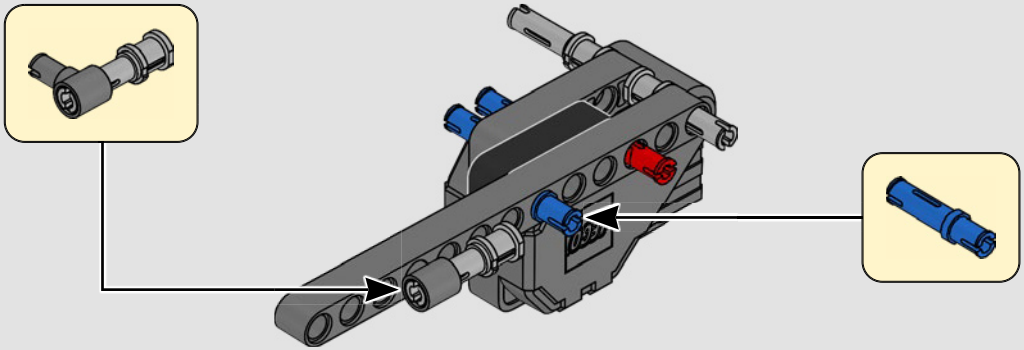

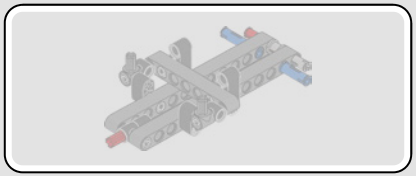

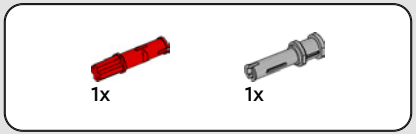

6

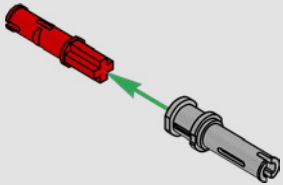

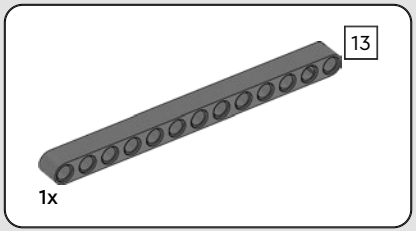

7

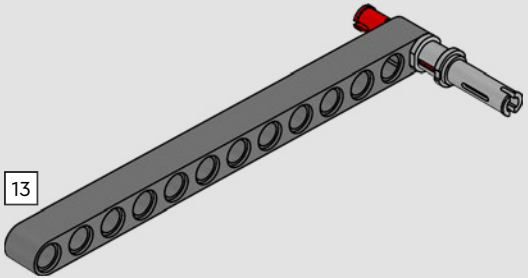

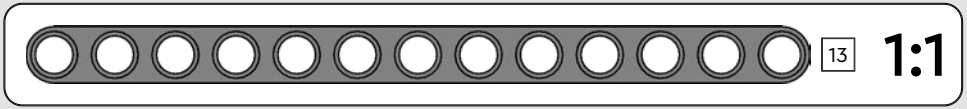

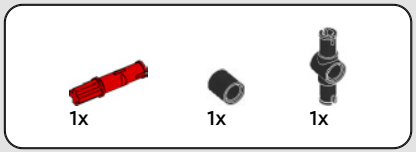

8

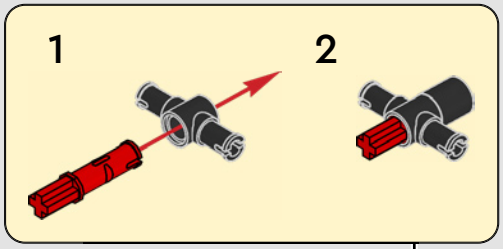

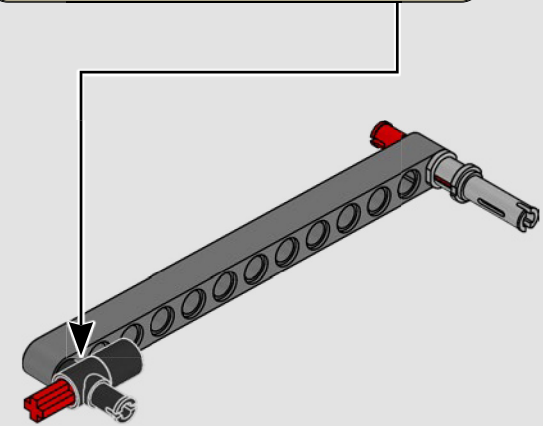

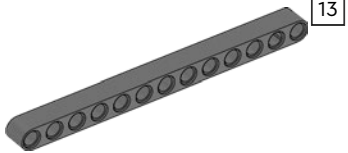

9

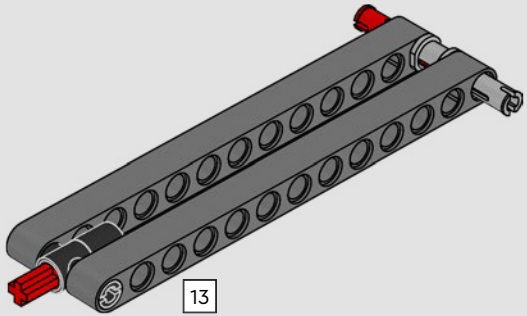

10

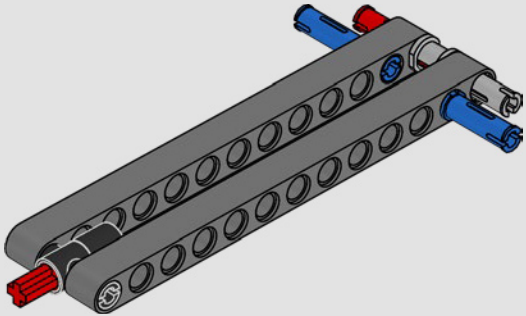

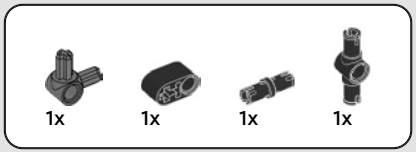

11

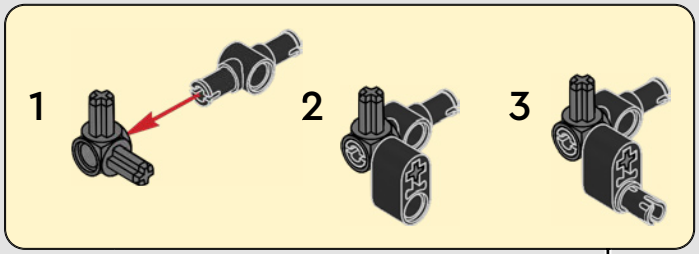

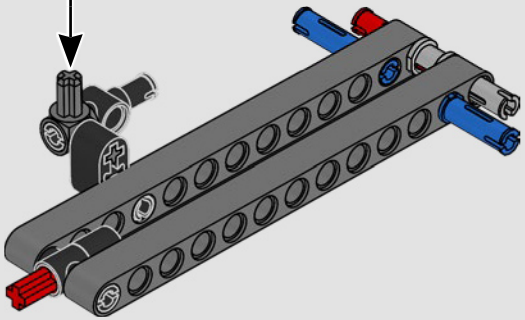

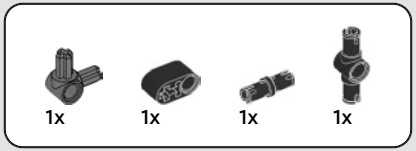

12

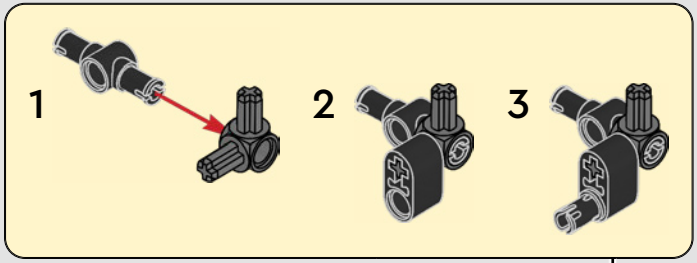

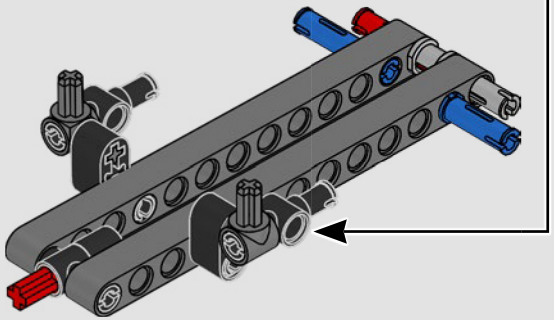

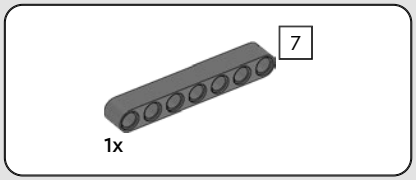

13

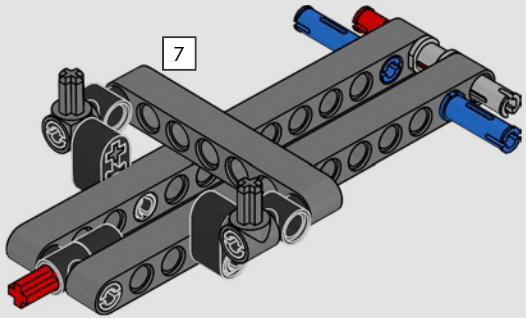

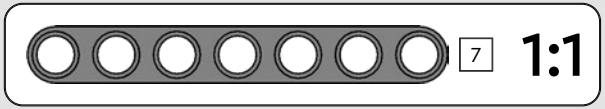

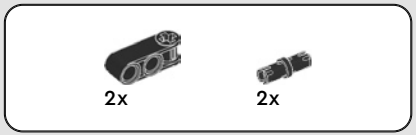

14

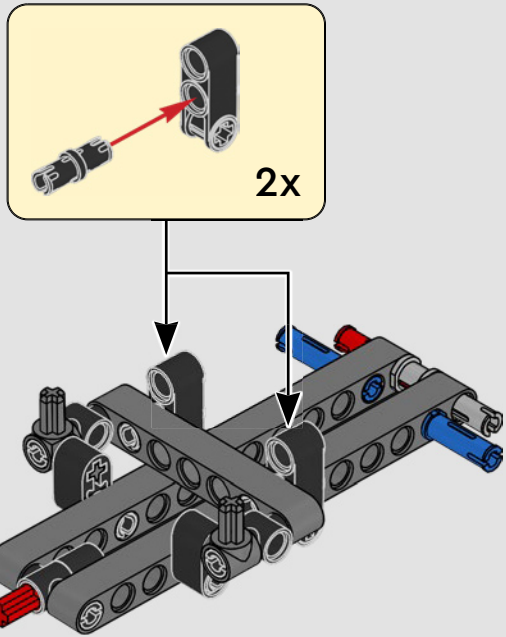

15

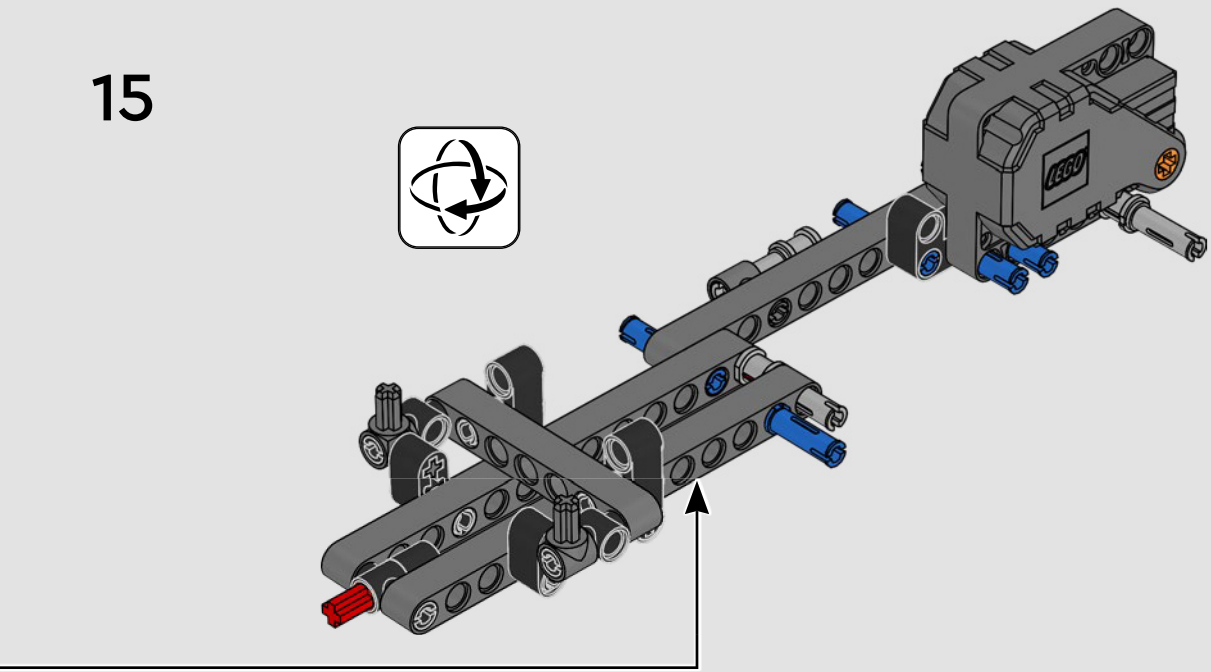

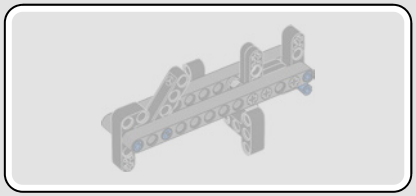

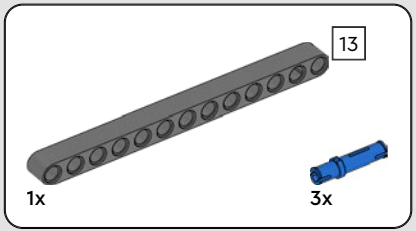

16

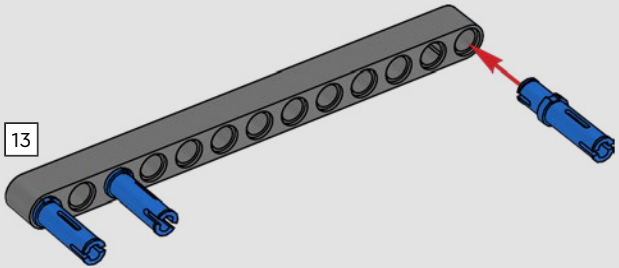

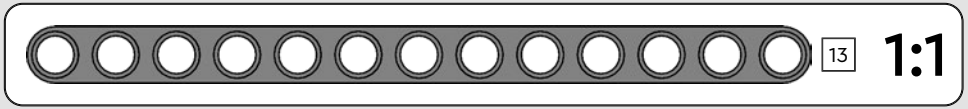

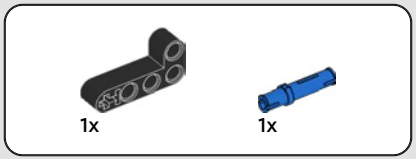

17

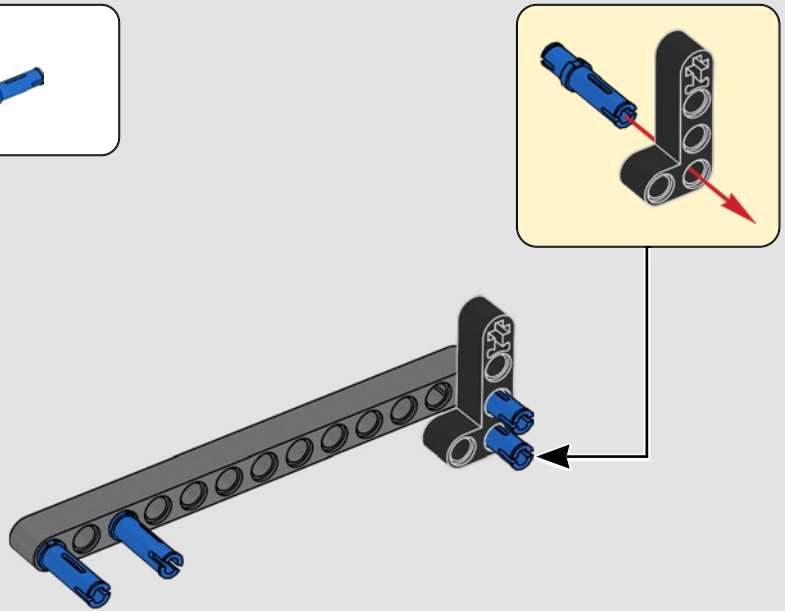

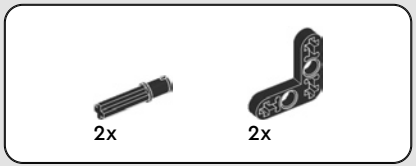

18

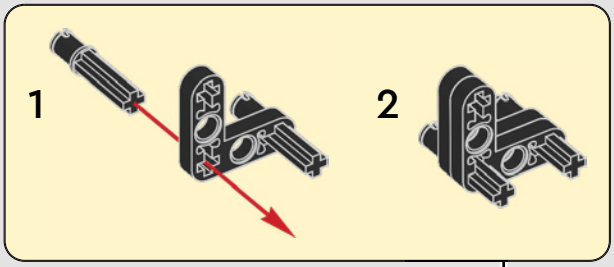

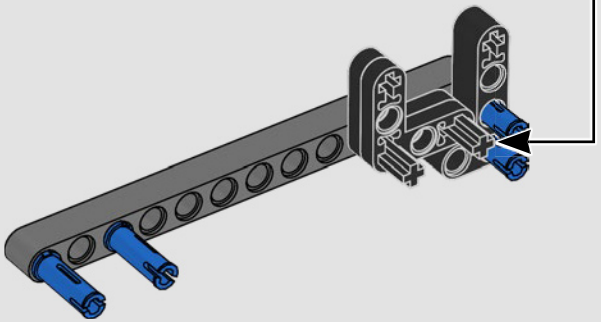

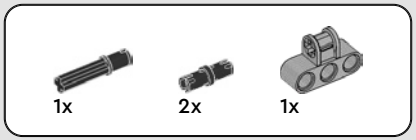

19

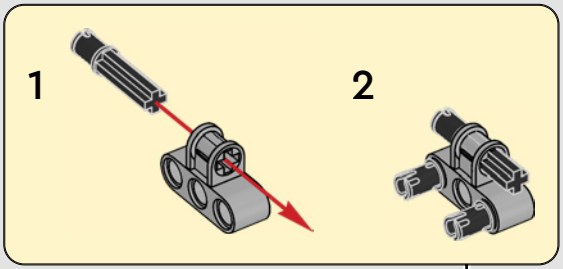

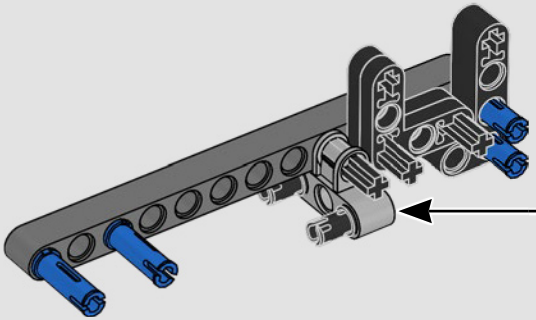

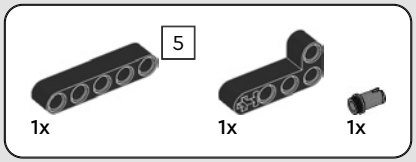

20

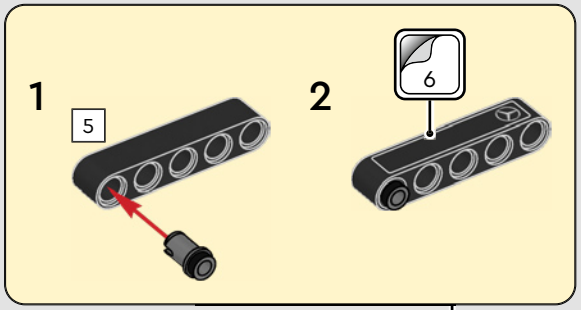

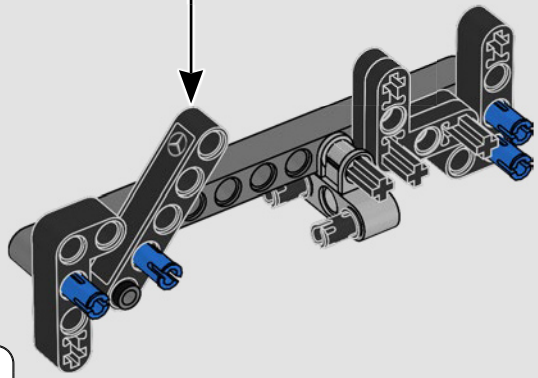

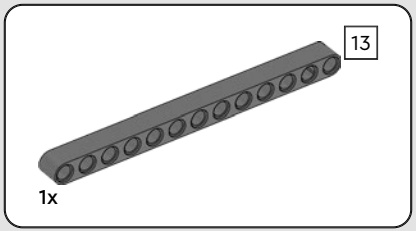

21

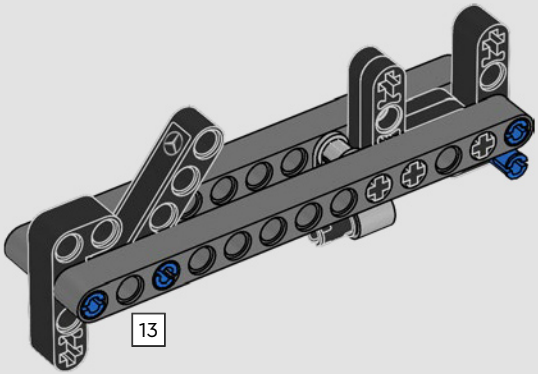

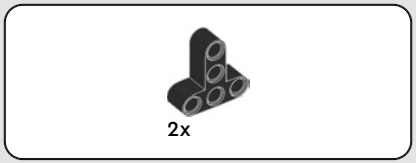

22

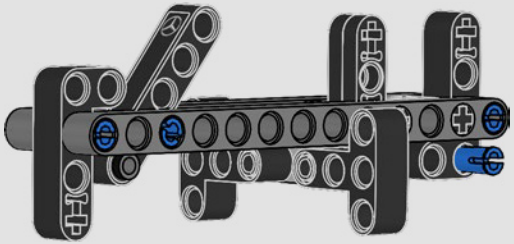

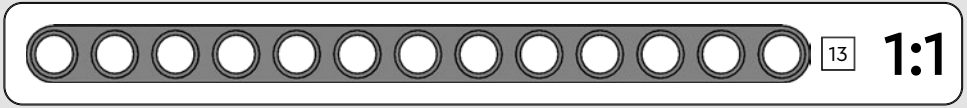

23

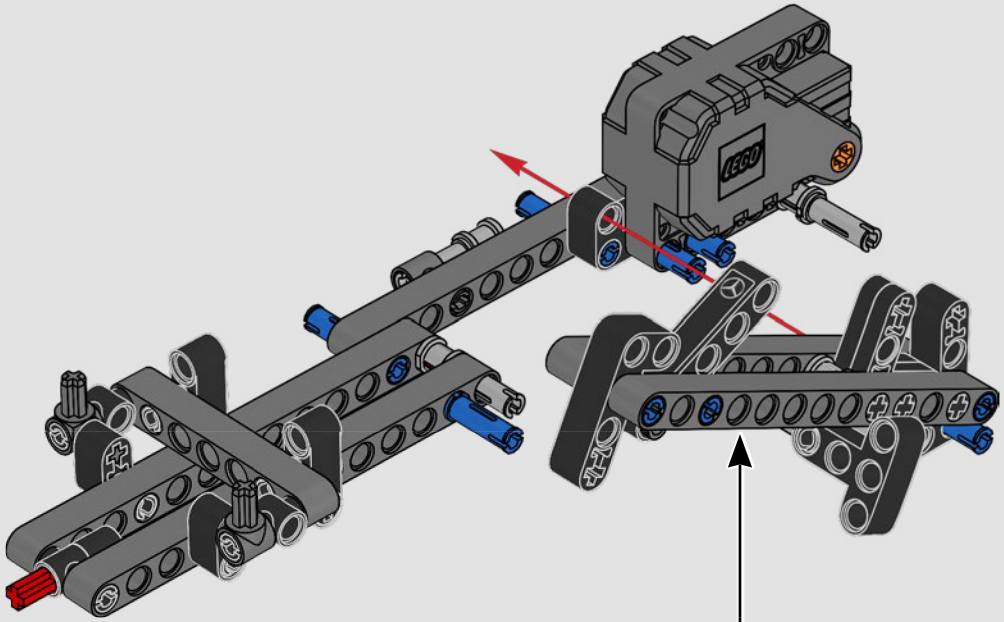

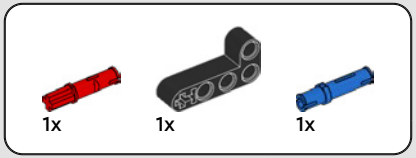

24

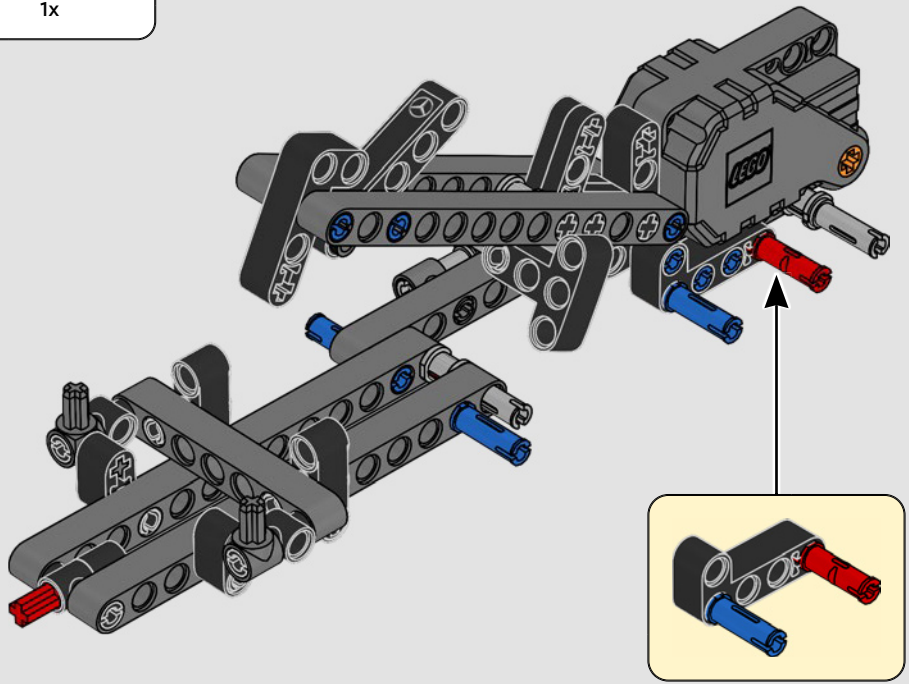

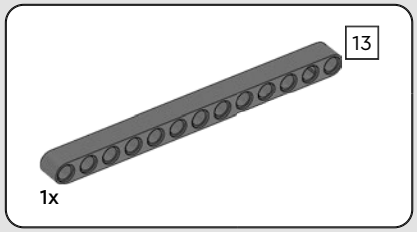

25

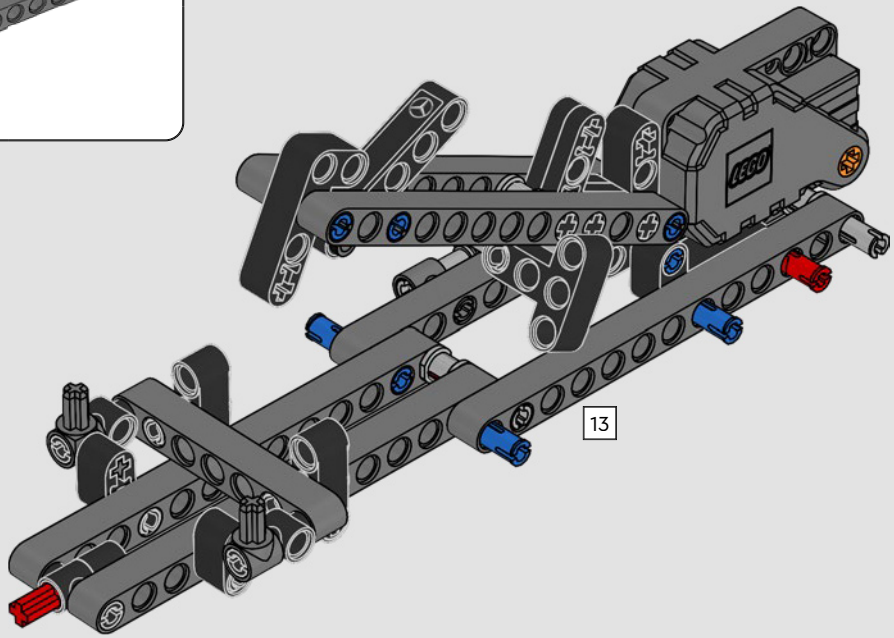

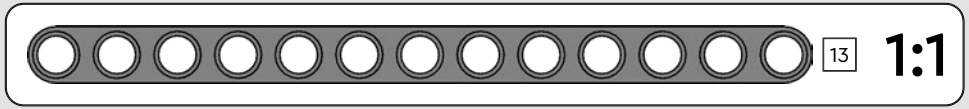

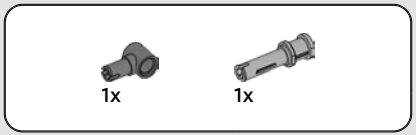

26

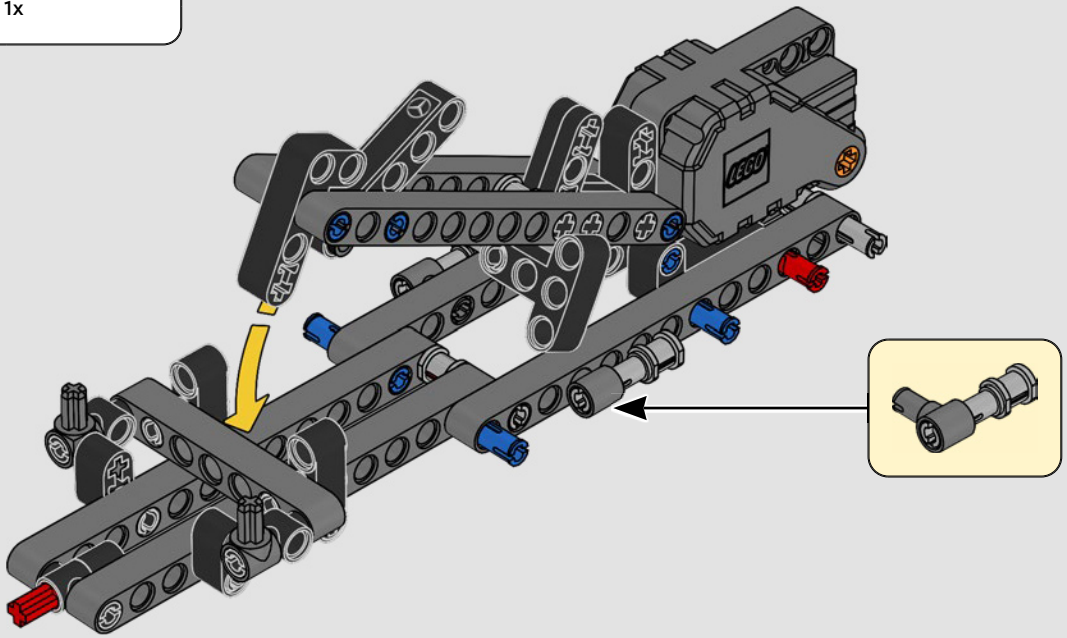

27

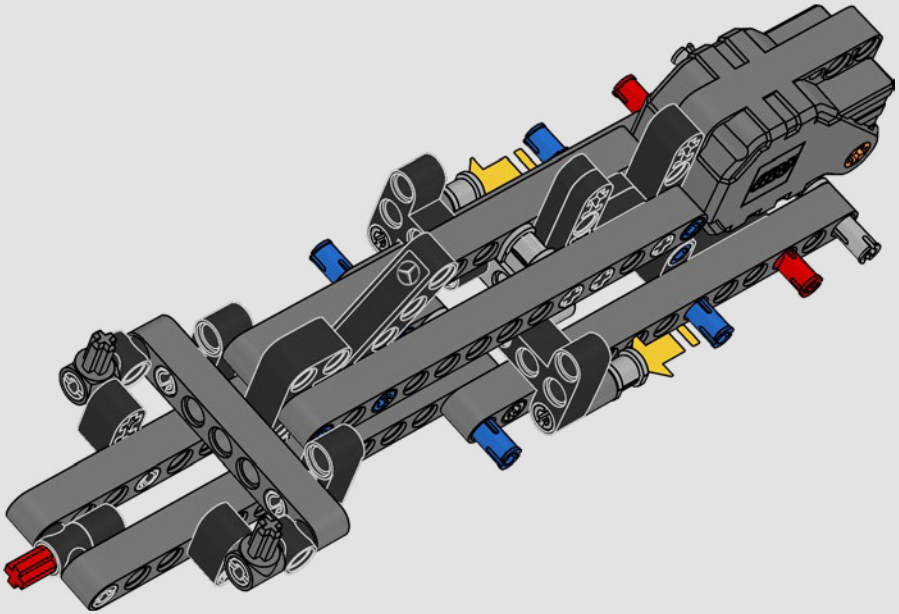

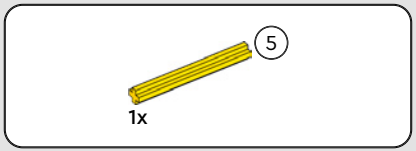

28

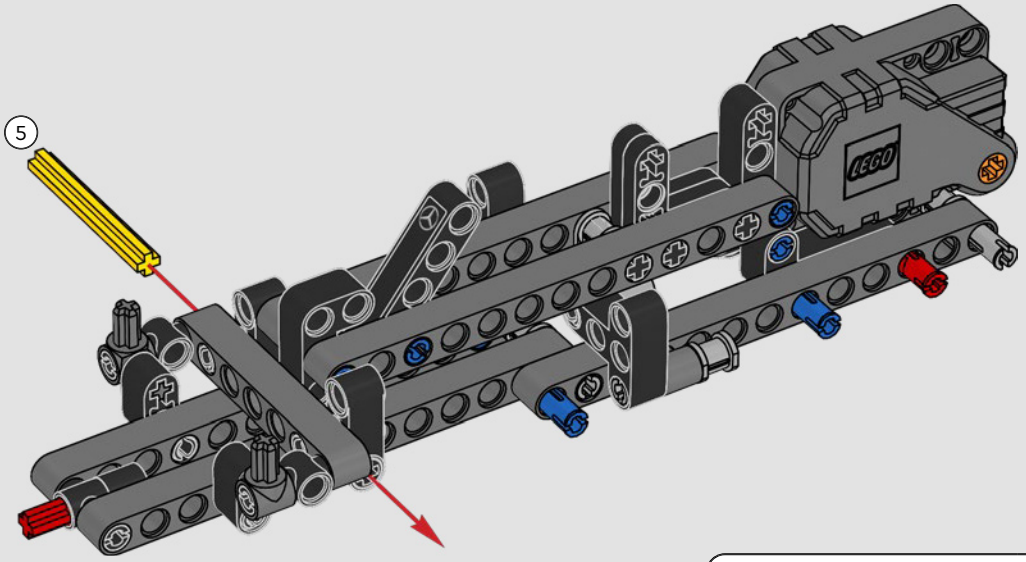

2

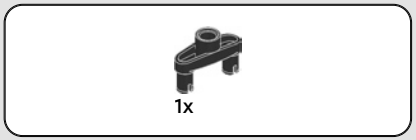

29

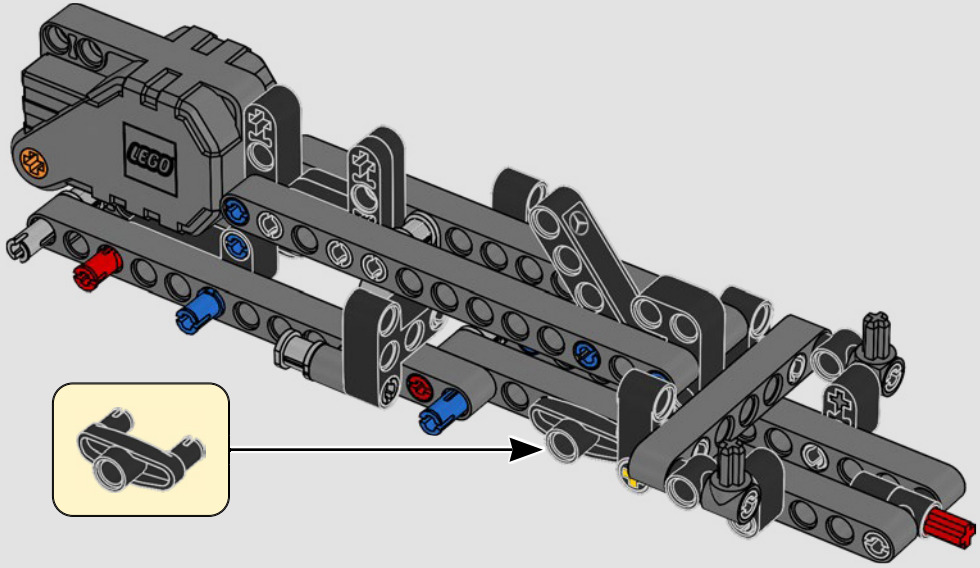

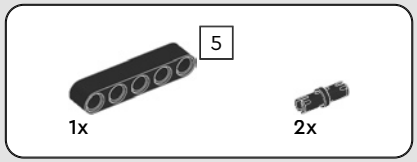

30

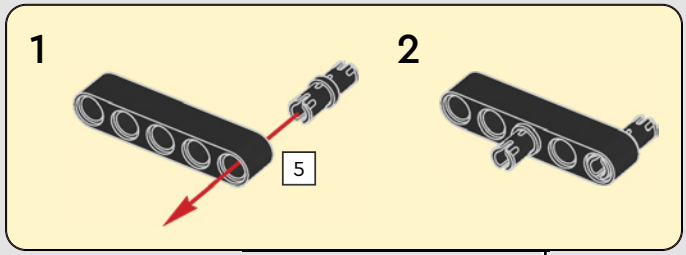

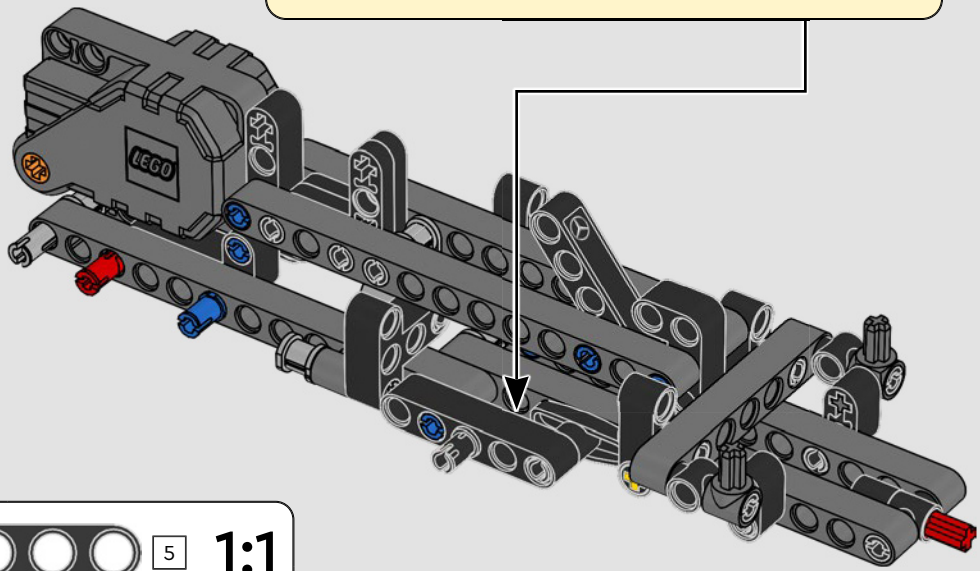

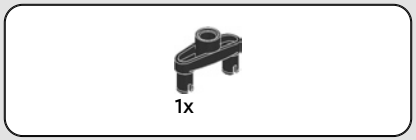

31

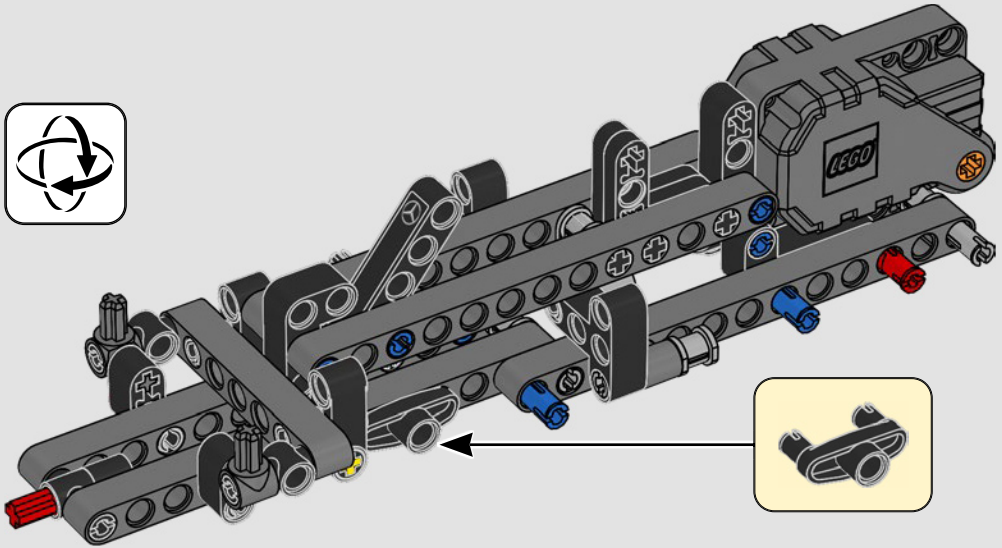

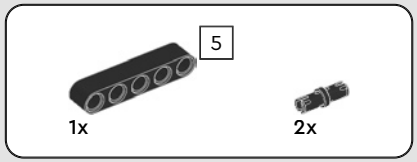

32

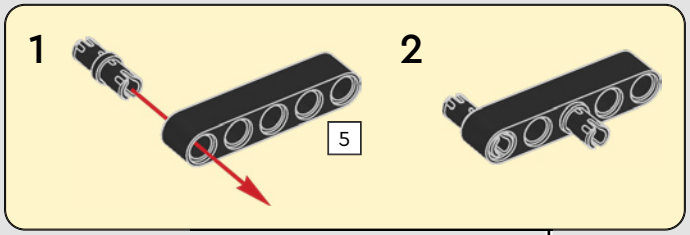

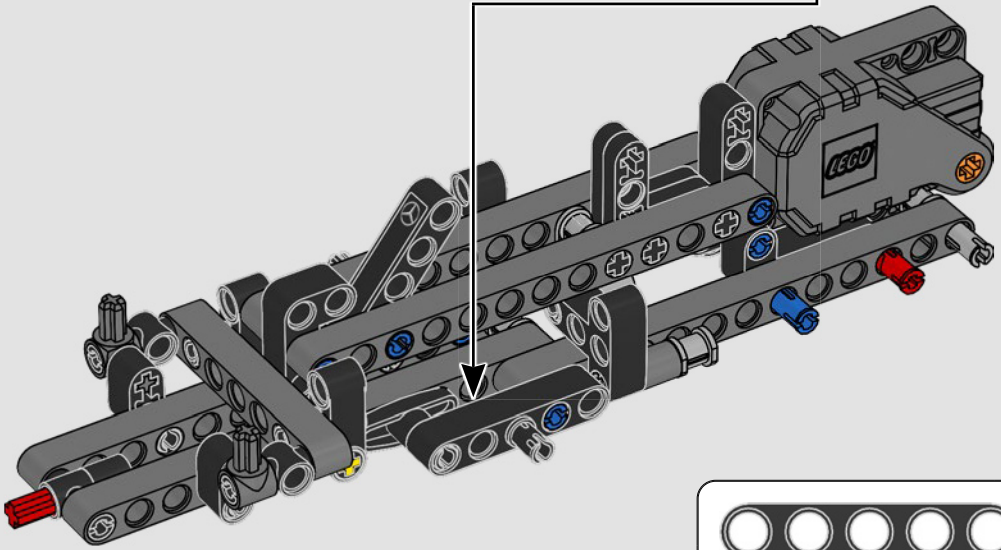

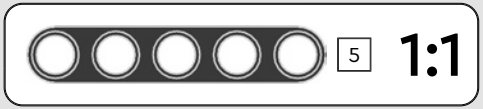

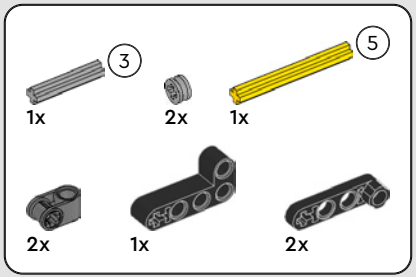

33

1

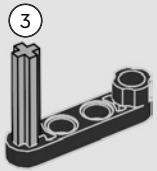

2

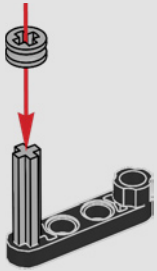

3

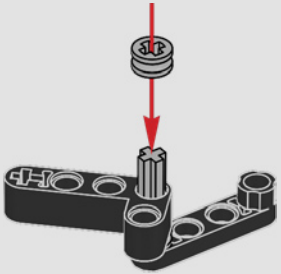

4

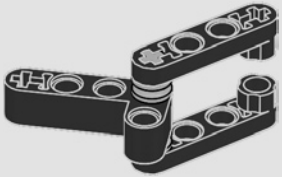

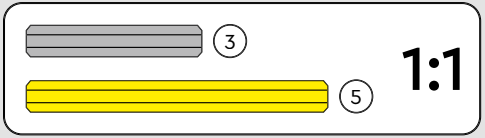

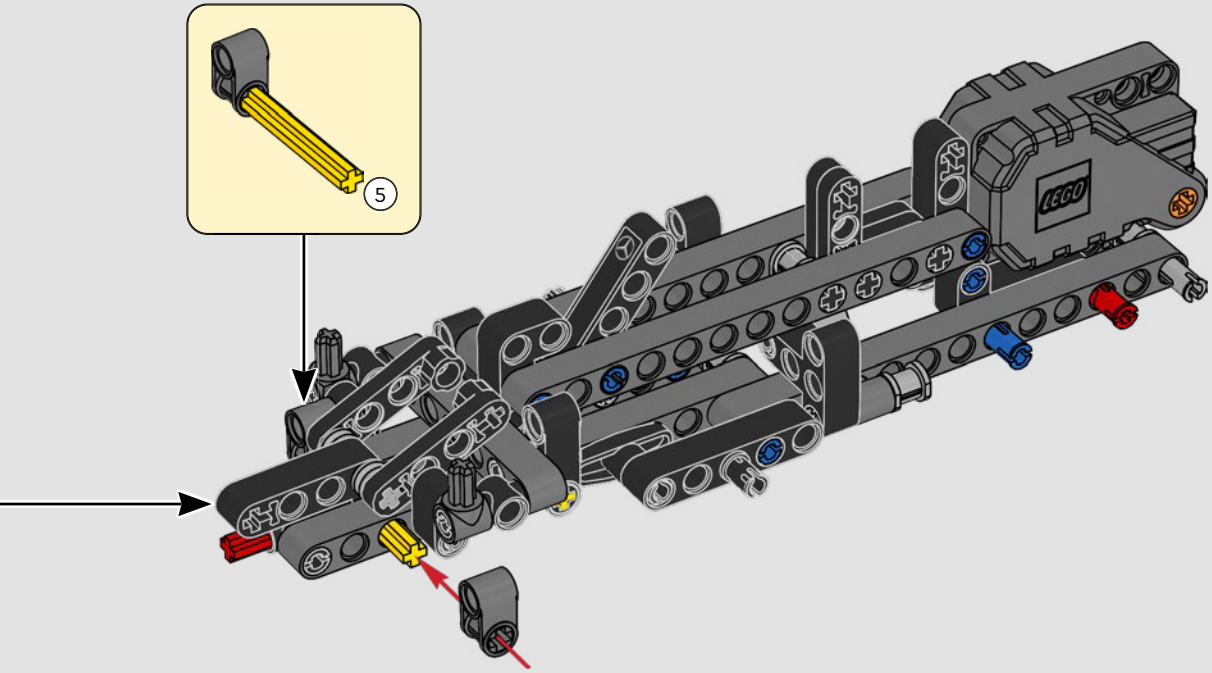
5

2x

34

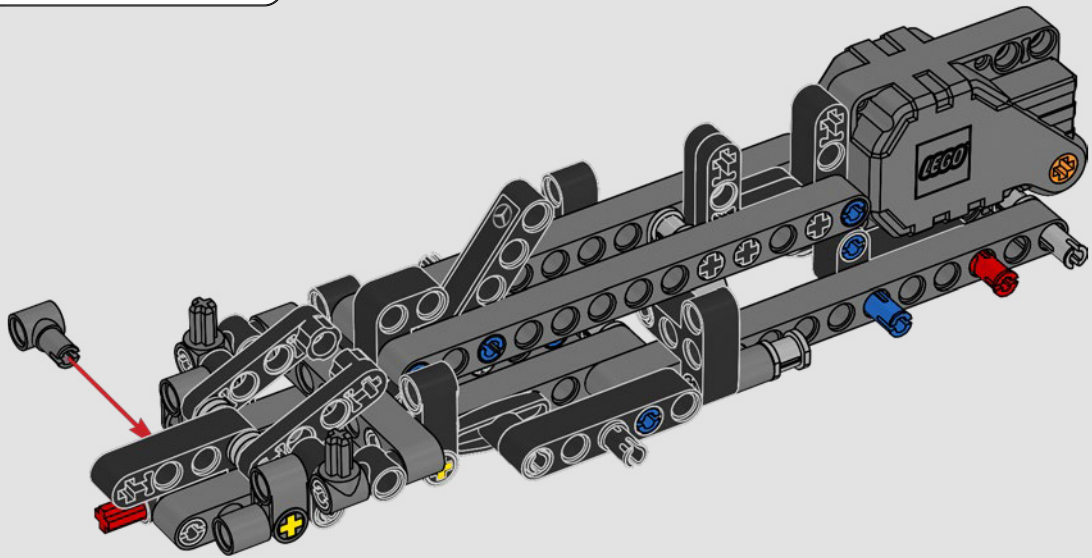

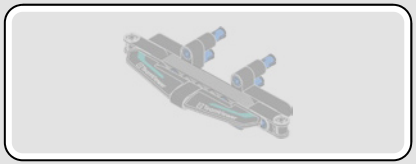

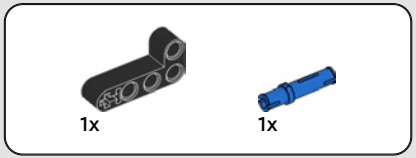

35

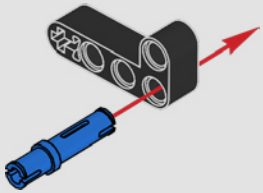

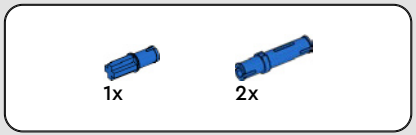

36

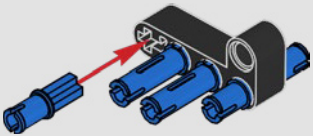

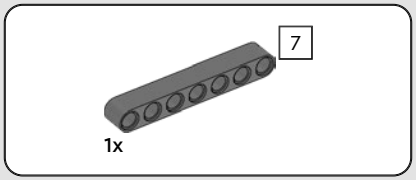

37

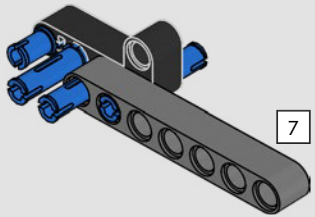

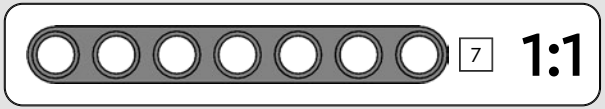

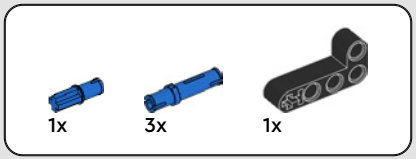

38

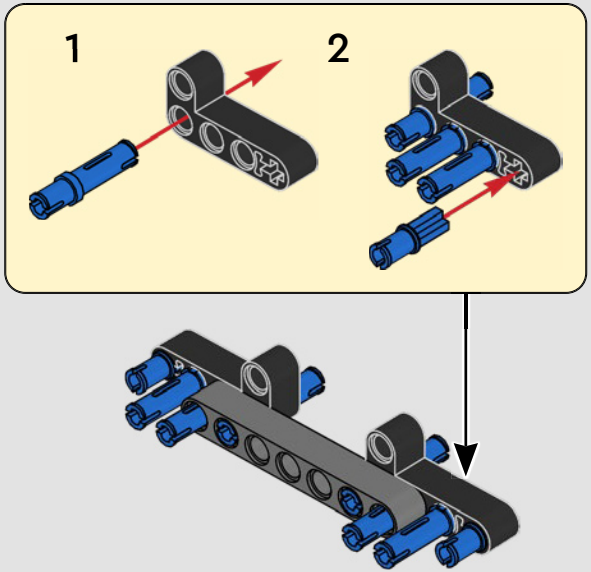

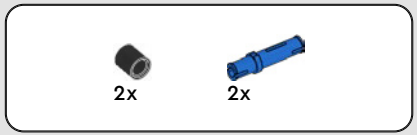

39

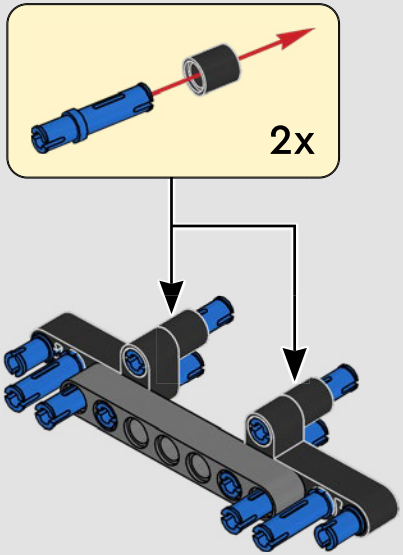

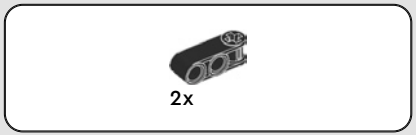

40

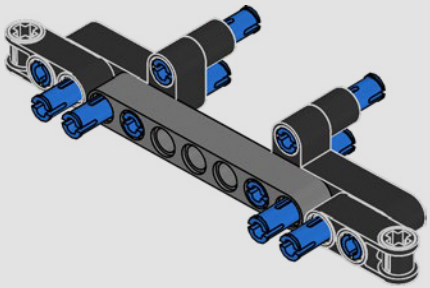

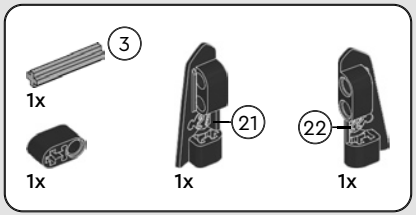

41

1

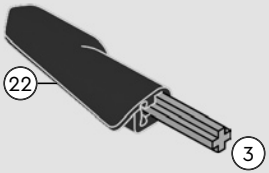

2

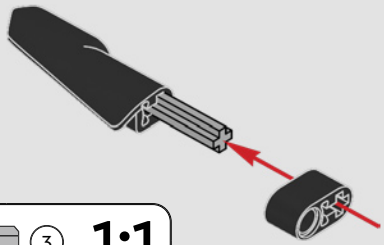

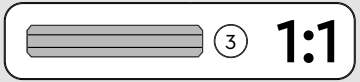

3

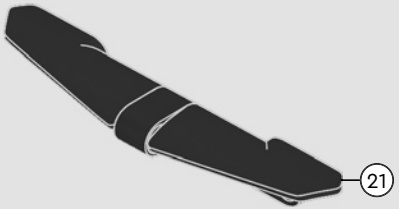

4

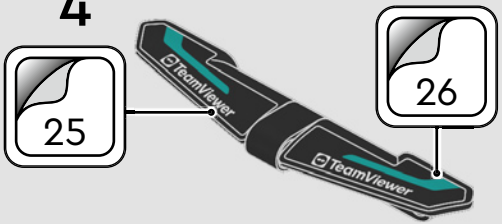

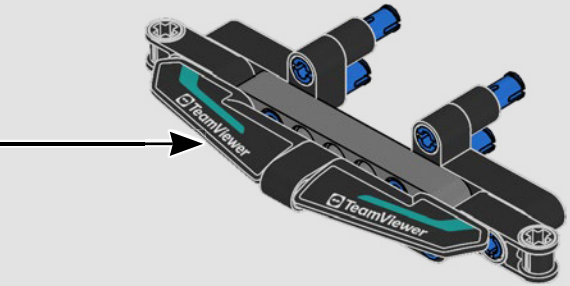

42

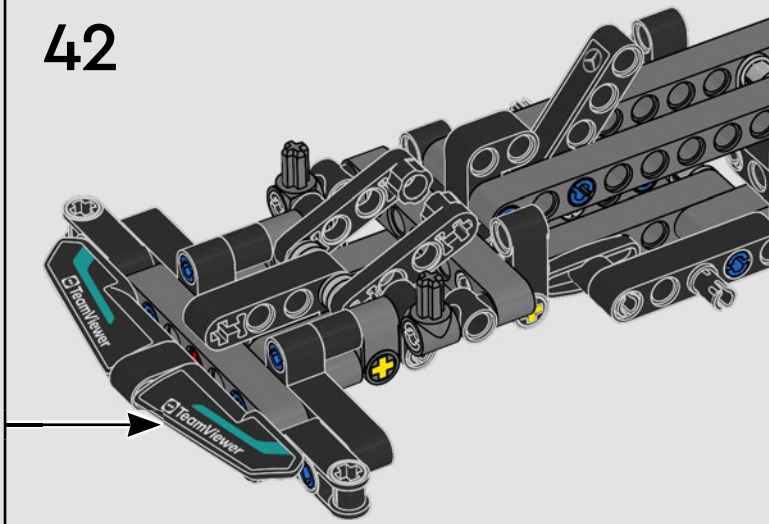

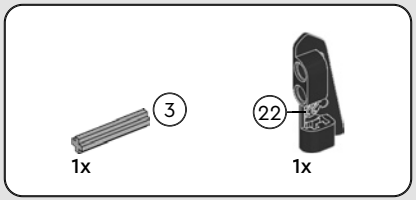
3
1x
22
1x

43

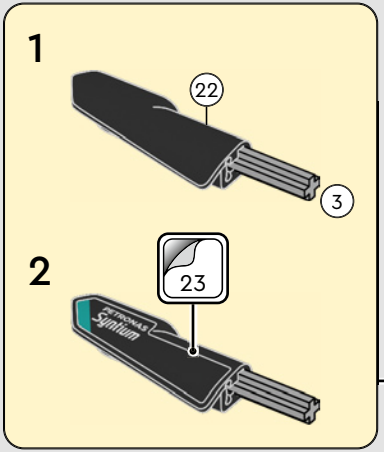
1
22
3
2
23

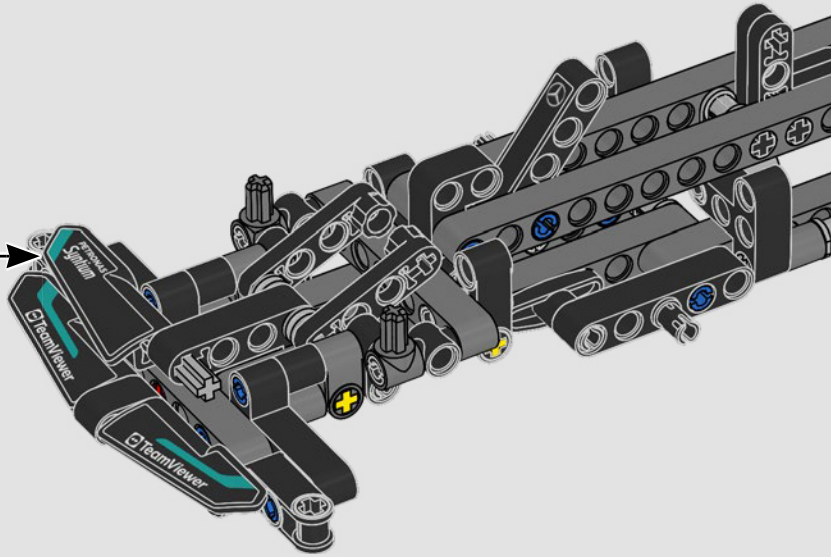
PETRONAS Syntium
TeamViewer
TeamViewer

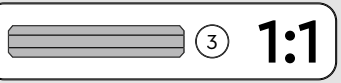
3
1:1

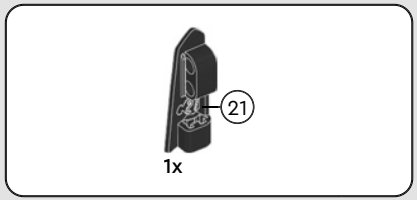

44

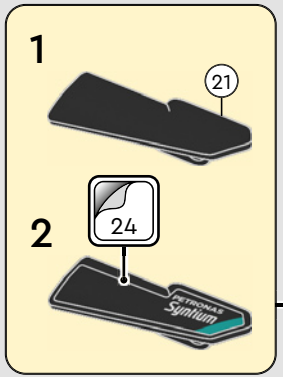

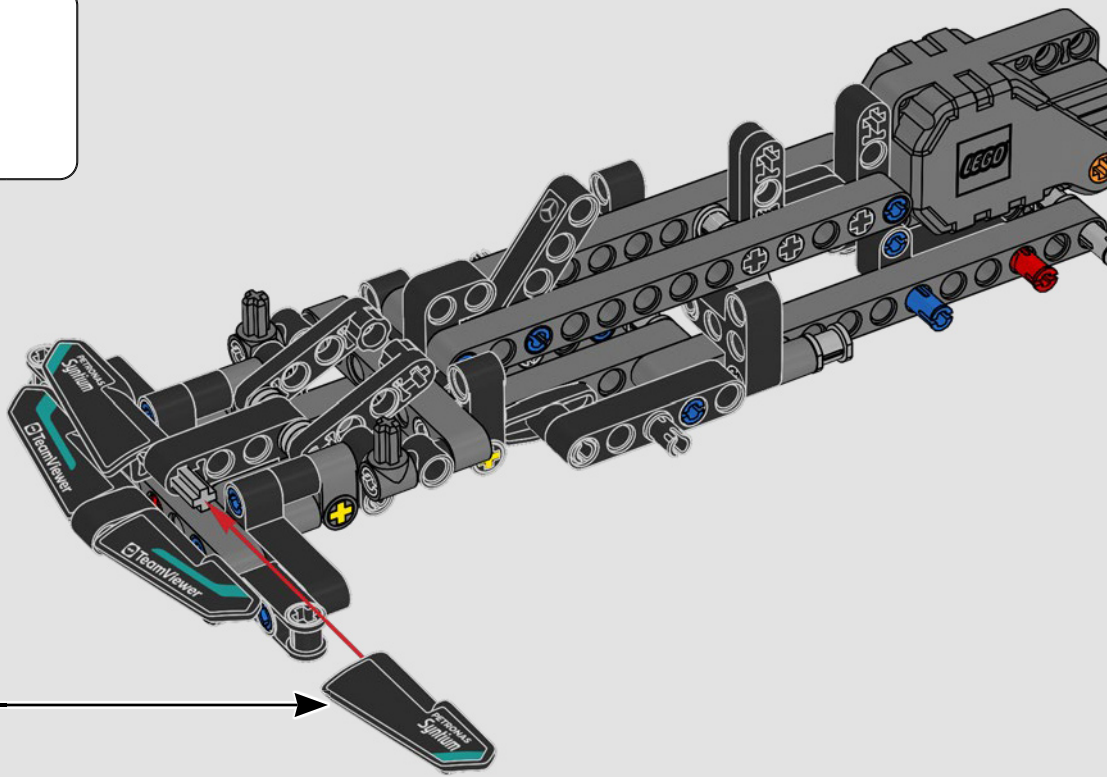

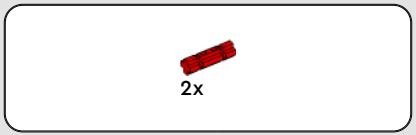

45

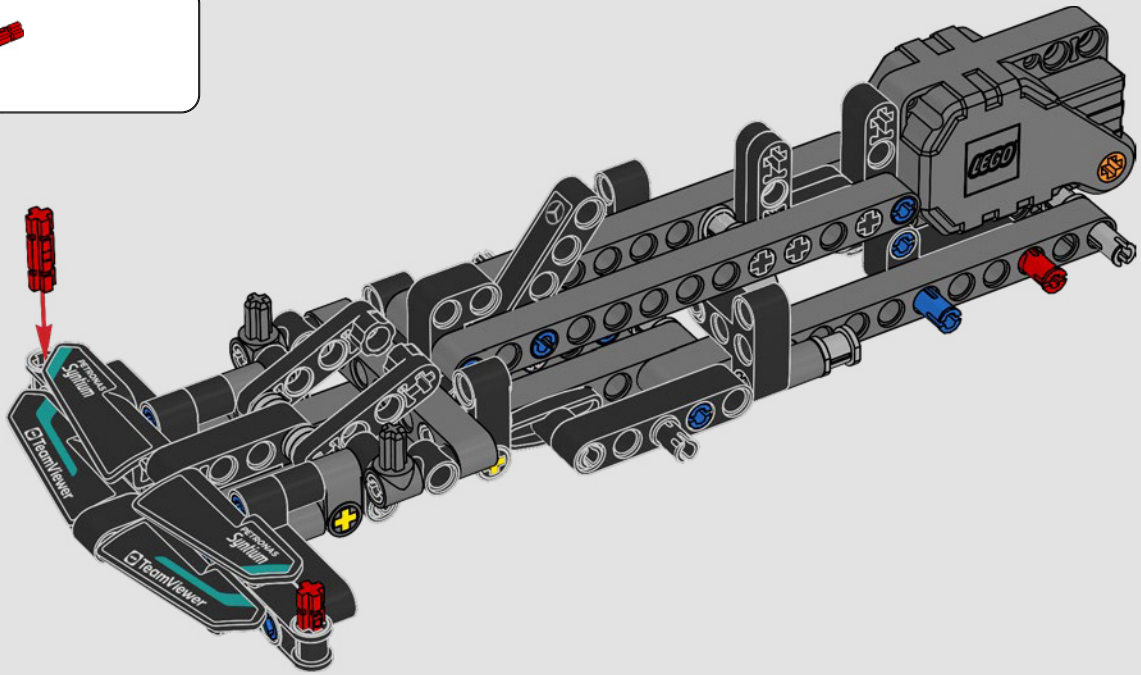

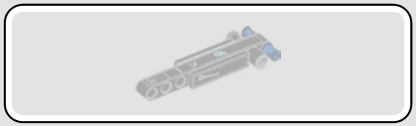

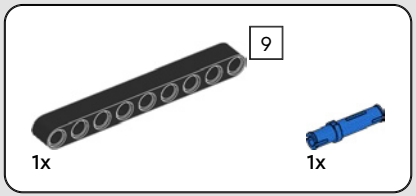

46

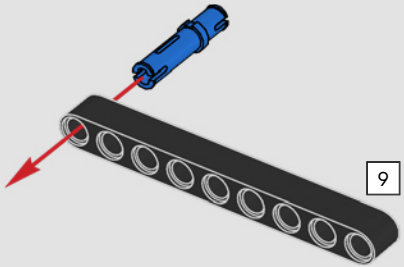

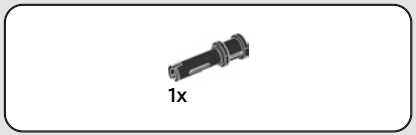

47

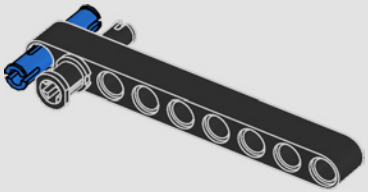

48

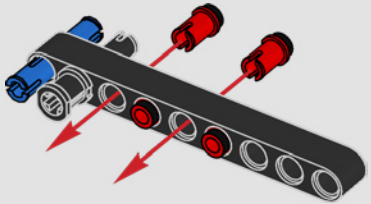

49

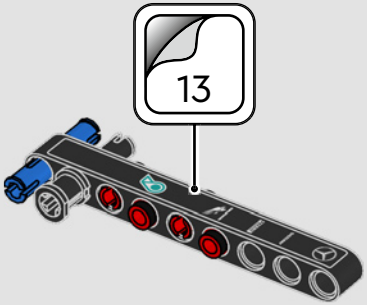

50

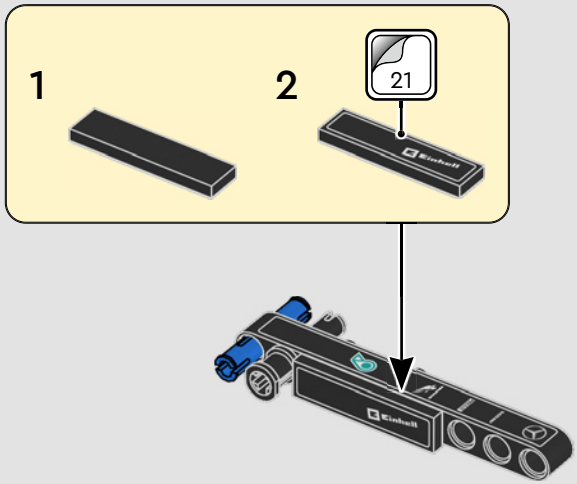

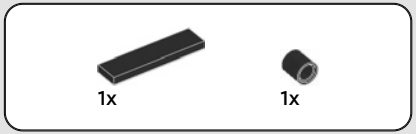

51

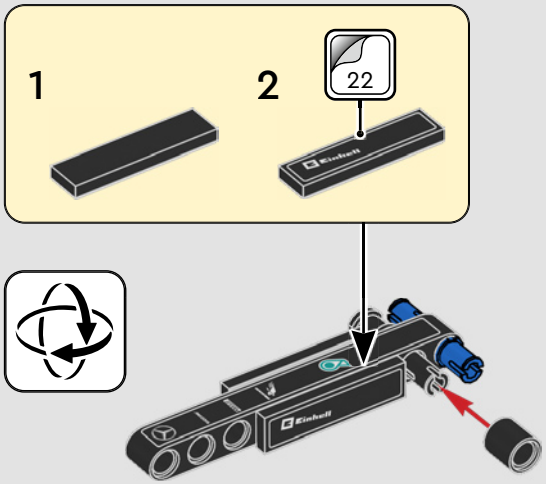

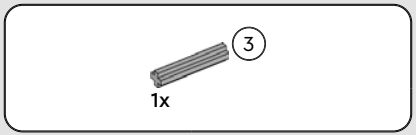

52

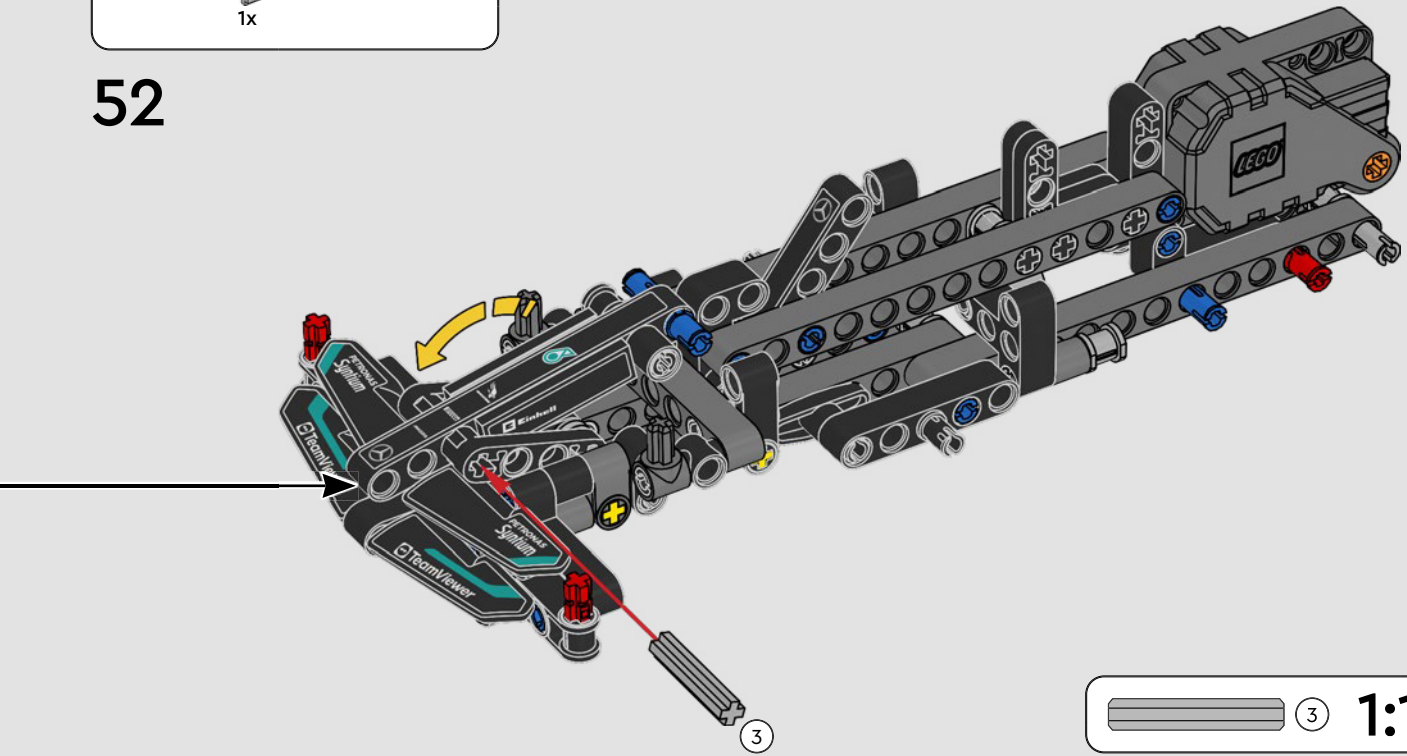

1x

53

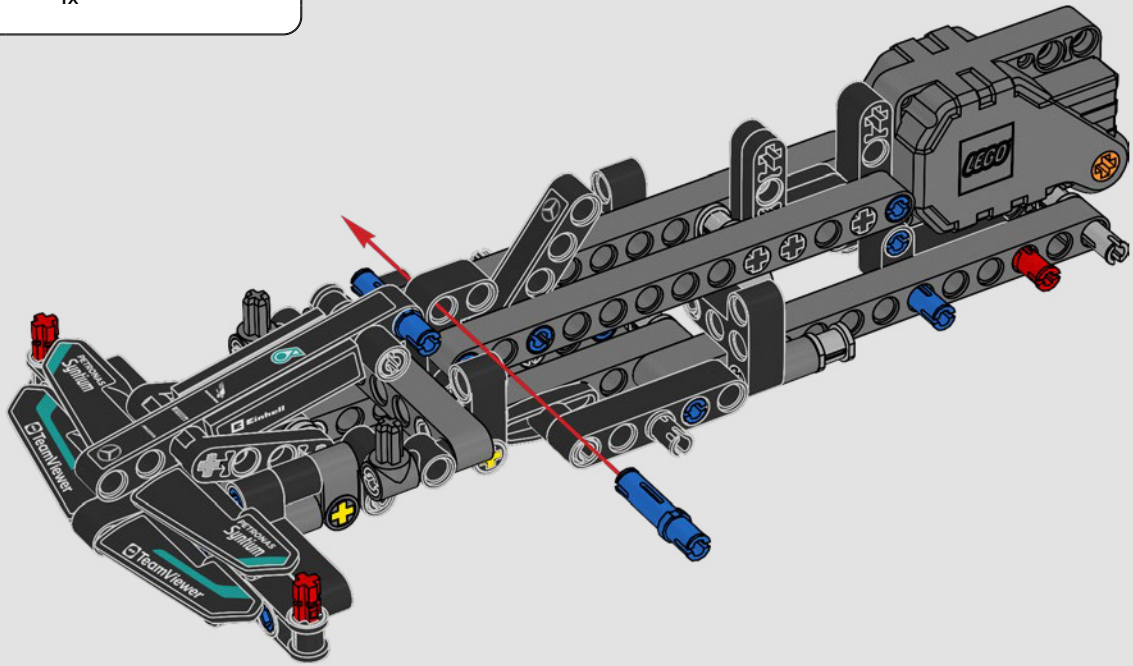

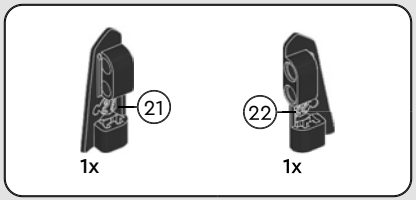
21
1x
22
1x

54

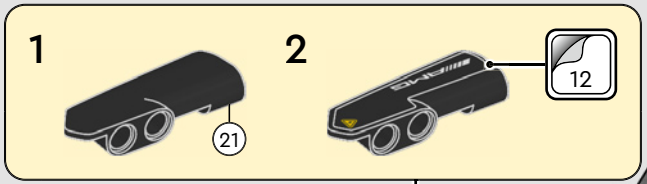
1
21
2
12

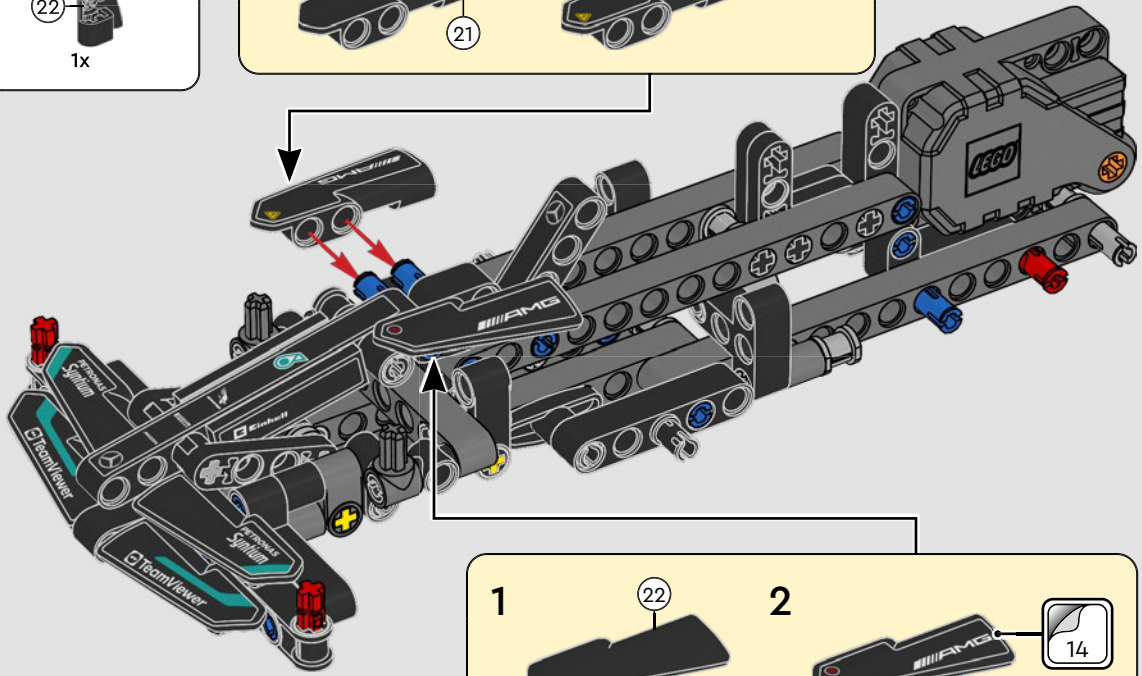
AMG
LEGO
Einhell
TeamViewer
TeamViewer

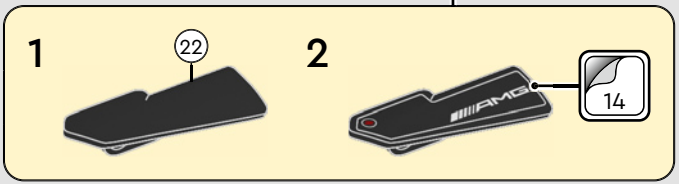
1
22
2
AMG
14

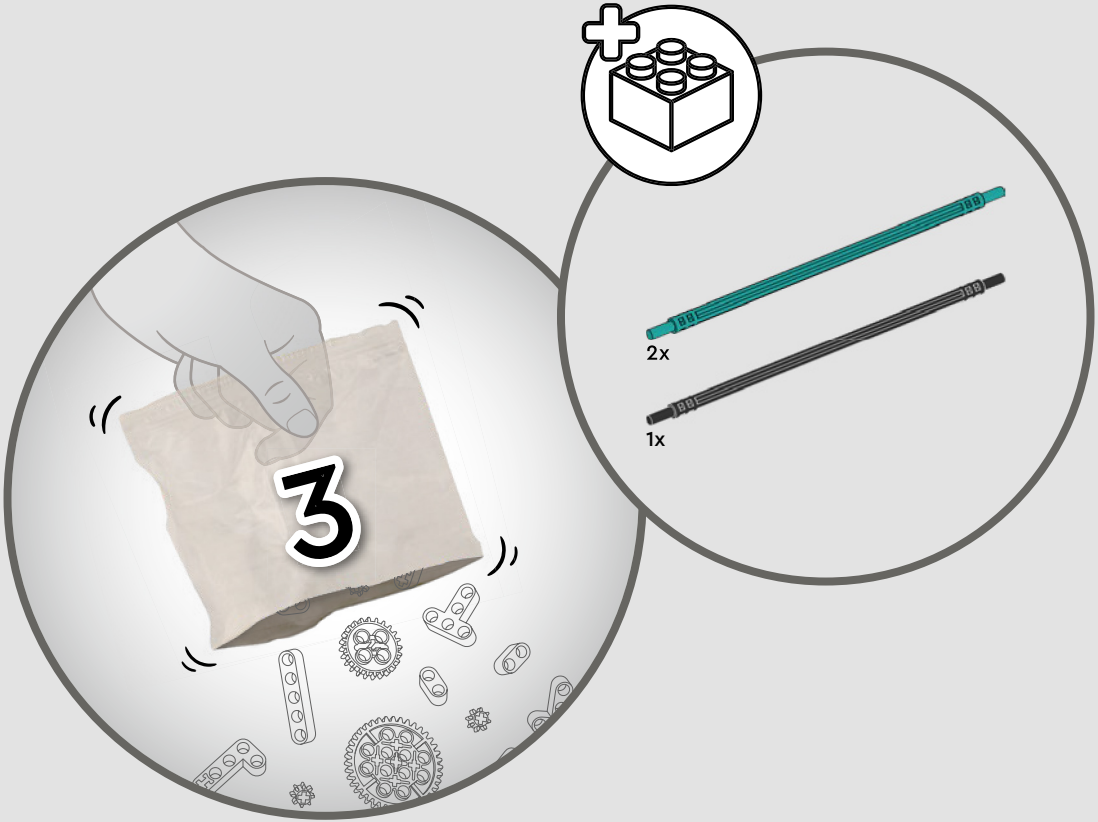
3
2x
1x

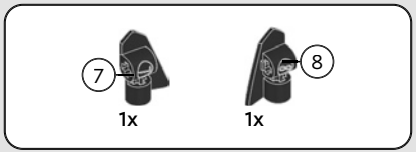

55

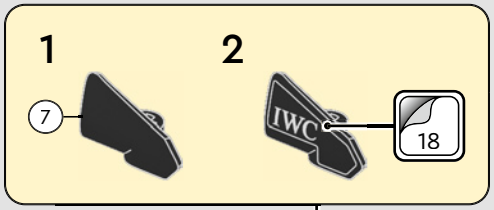

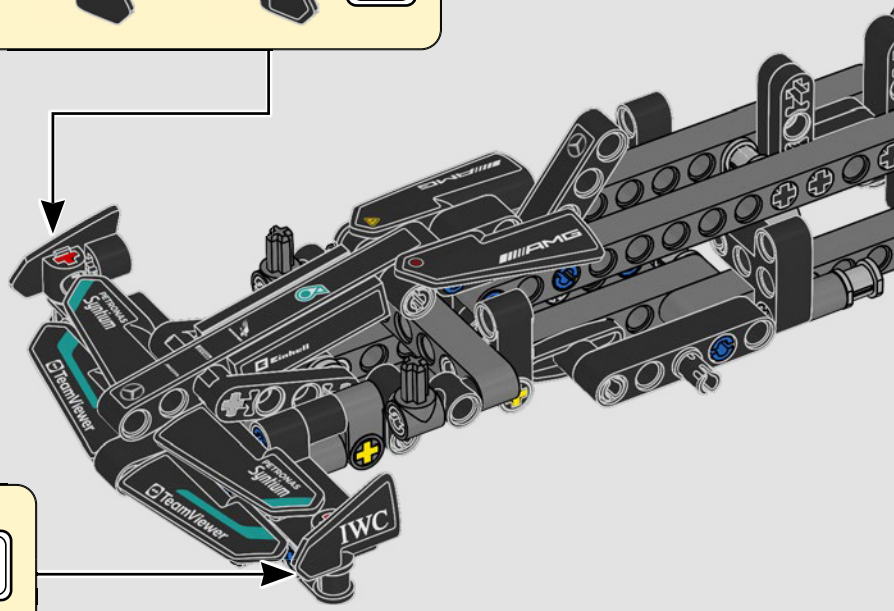

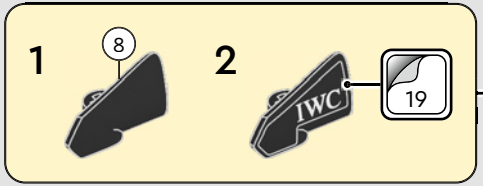

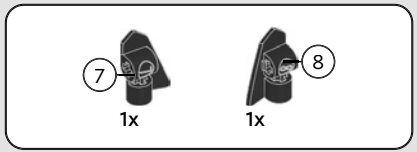

56

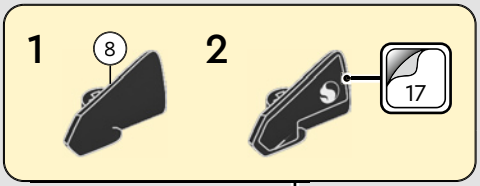

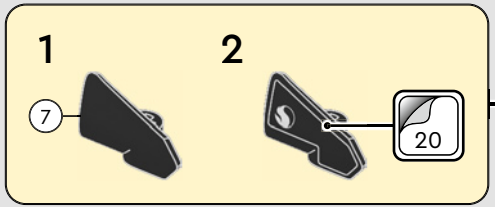

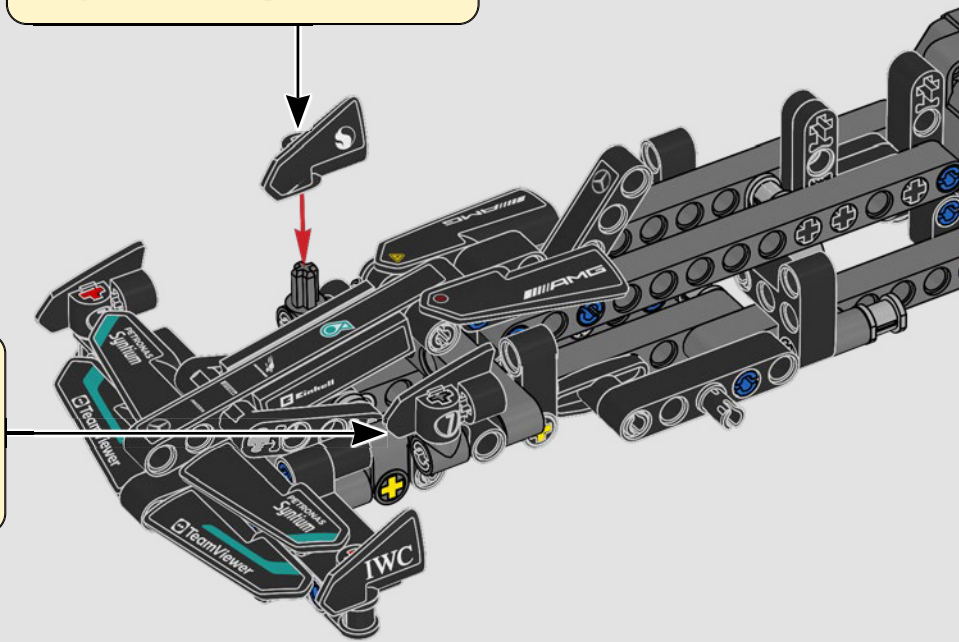

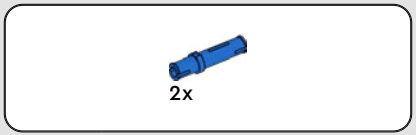

57

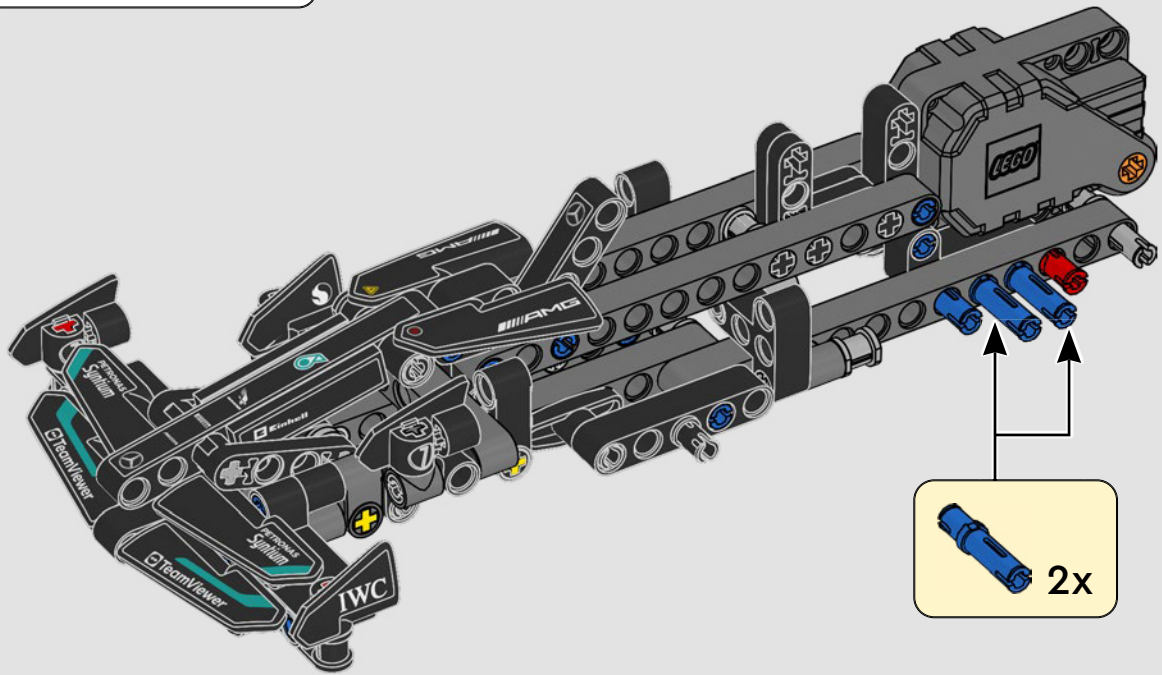

1x

58

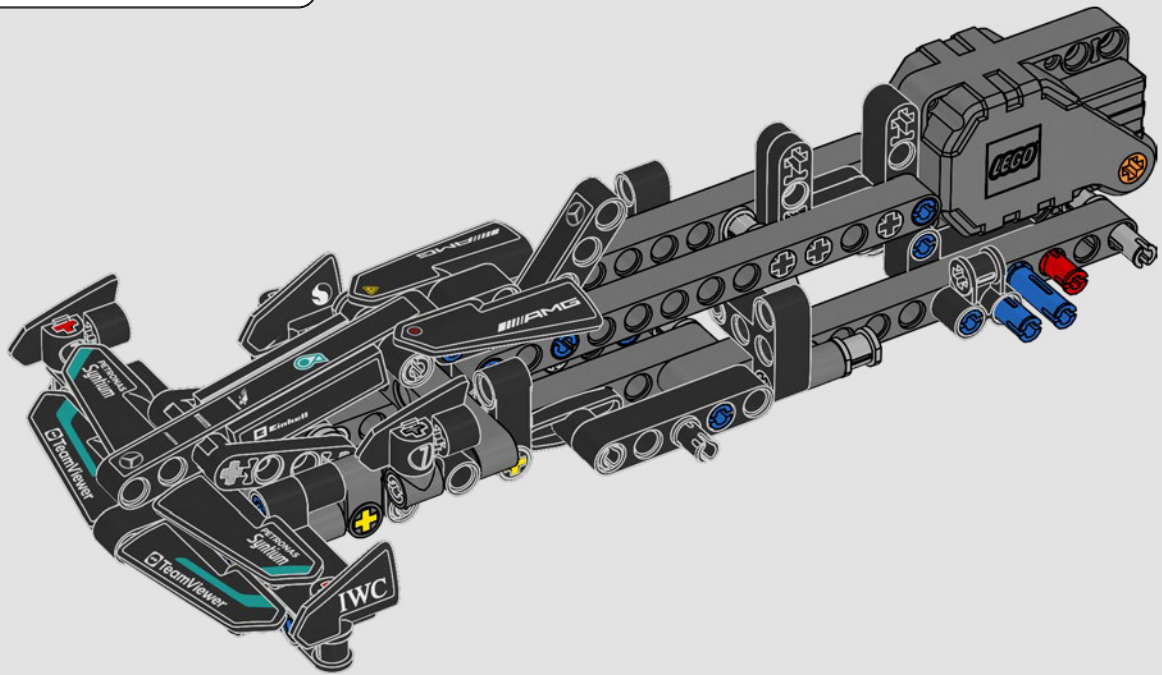
LEGO
AMG
Petronas Syntium
TeamViewer
Petronas Syntium
TeamViewer
IWC

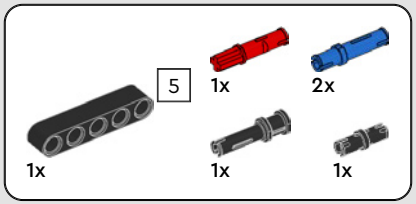

59

1

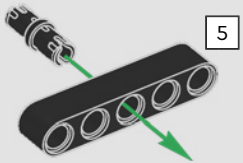

2

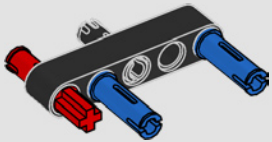

3

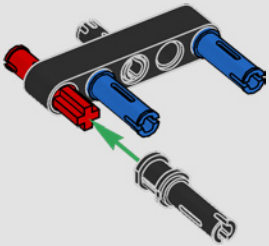

4

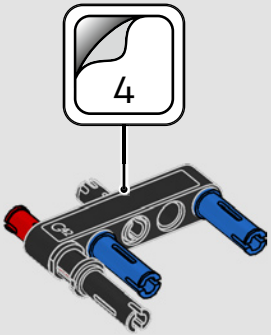

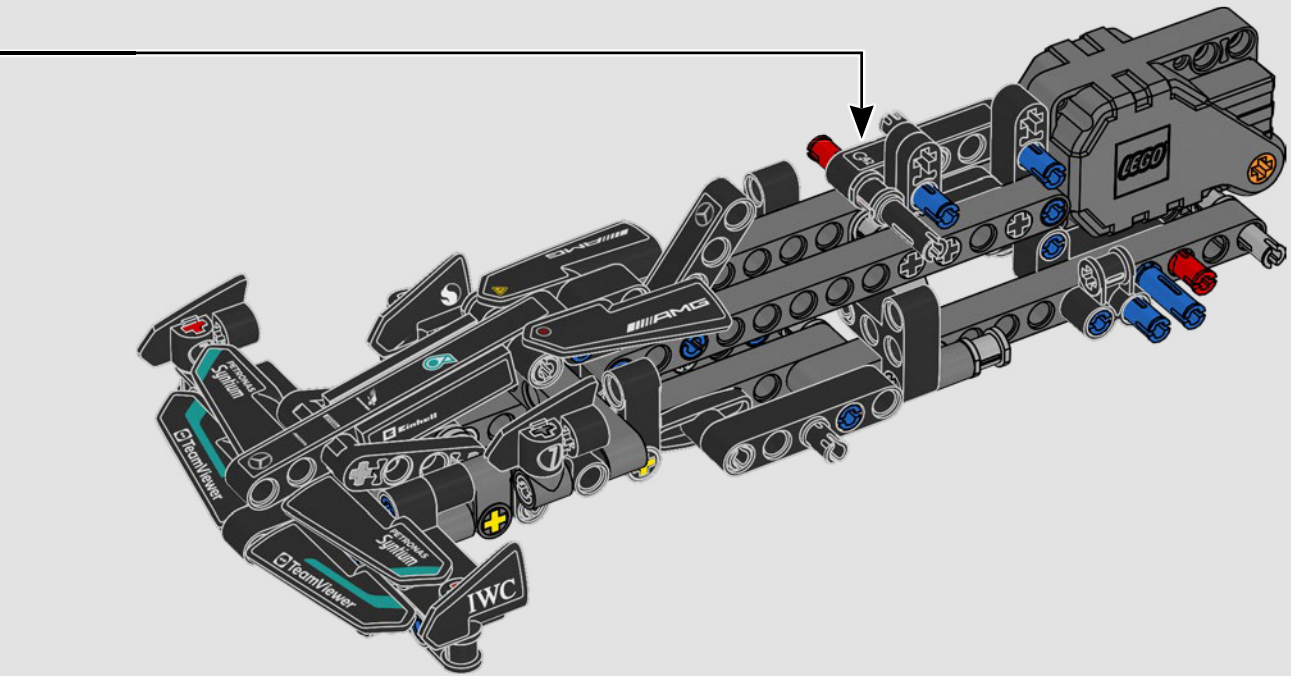
LEGO
AMG
TeamViewer
TeamViewer
IWC

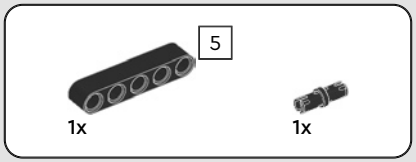

60

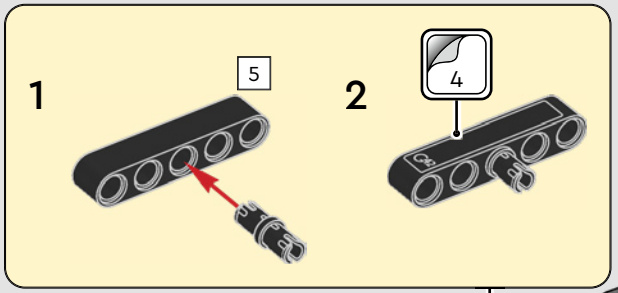

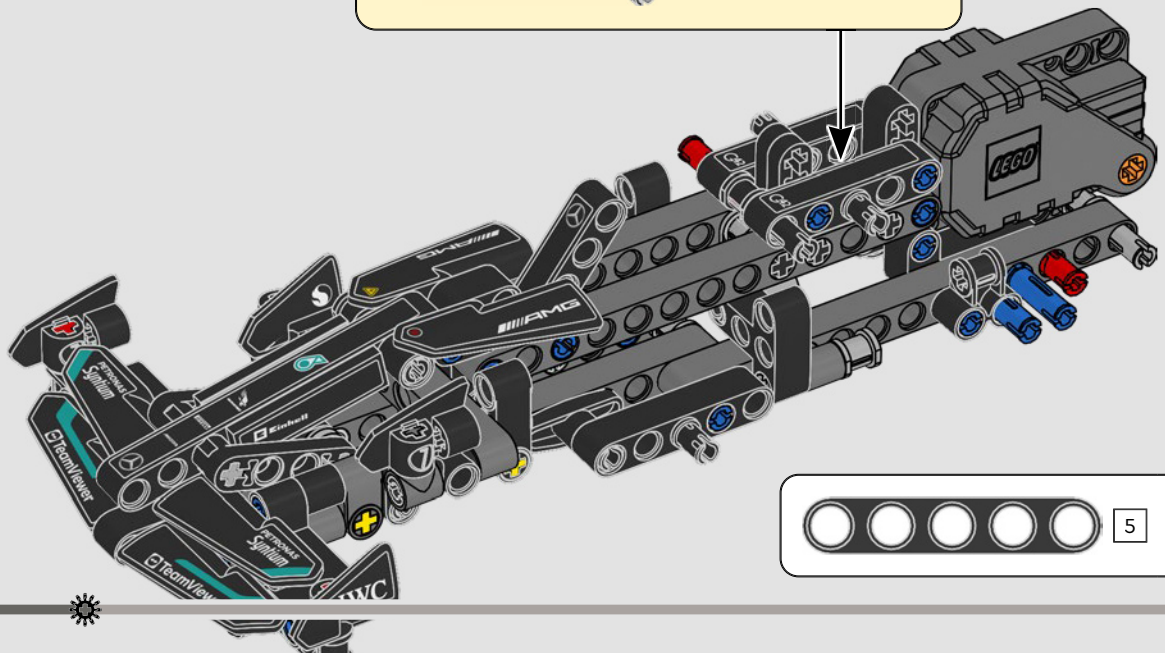

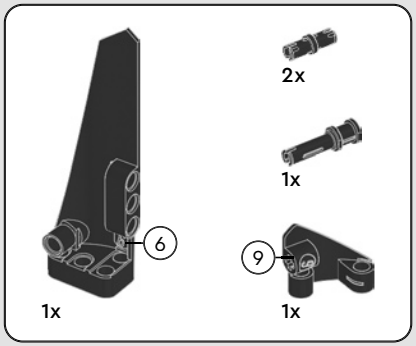
2x
1x
6
9
1x
1x

61

1

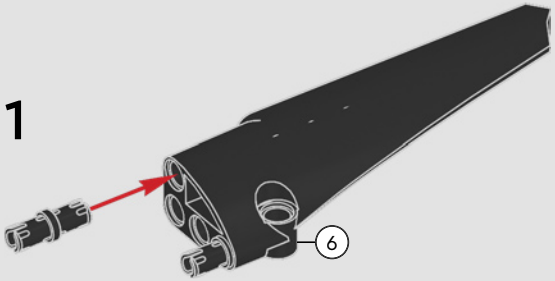
6

2

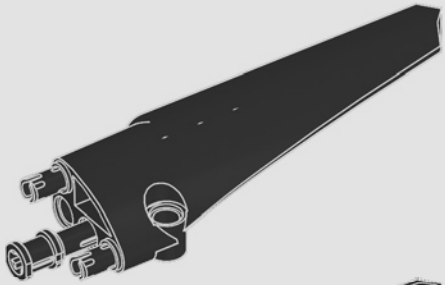

3

AMD
TeamViewer
PETRONAS
7

4

AMD
TeamViewer
PETRONAS
9

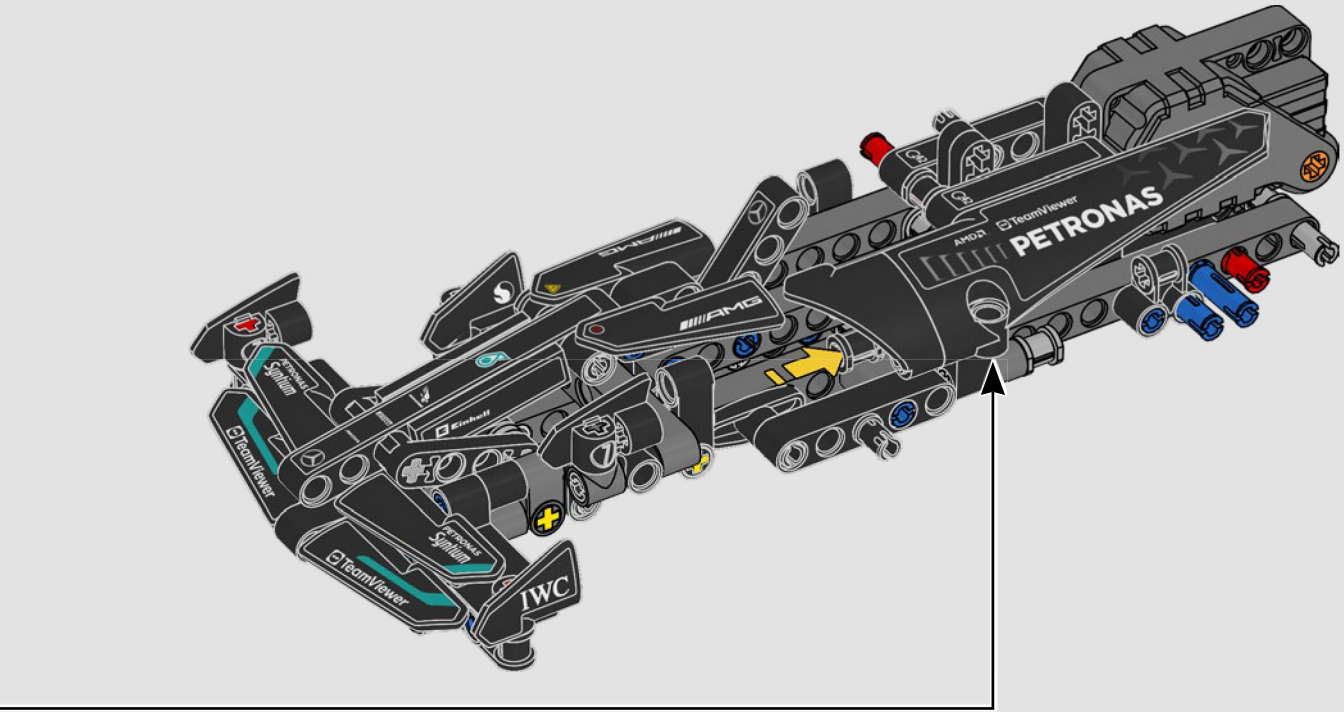
PETRONAS
TeamViewer
AMG
Einhell
IWC

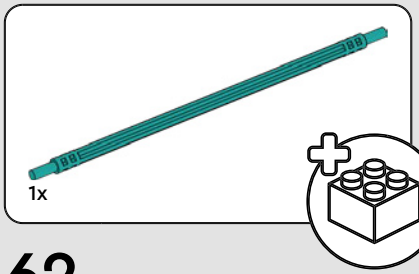

62

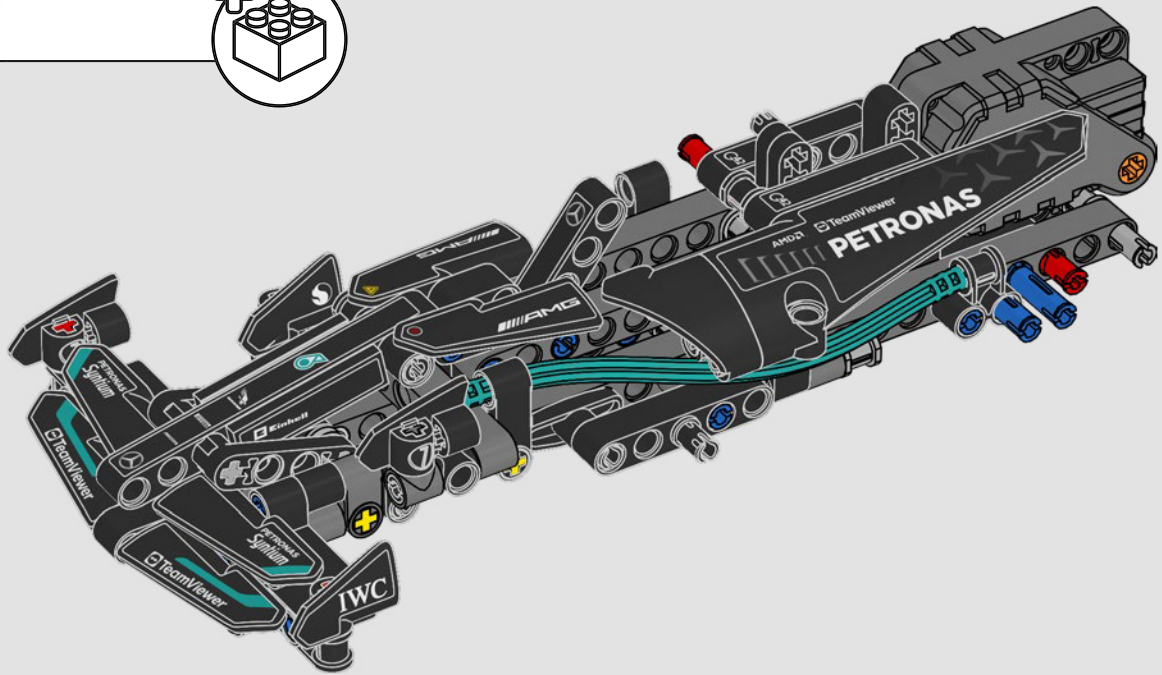

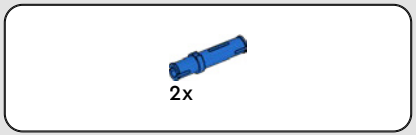

63

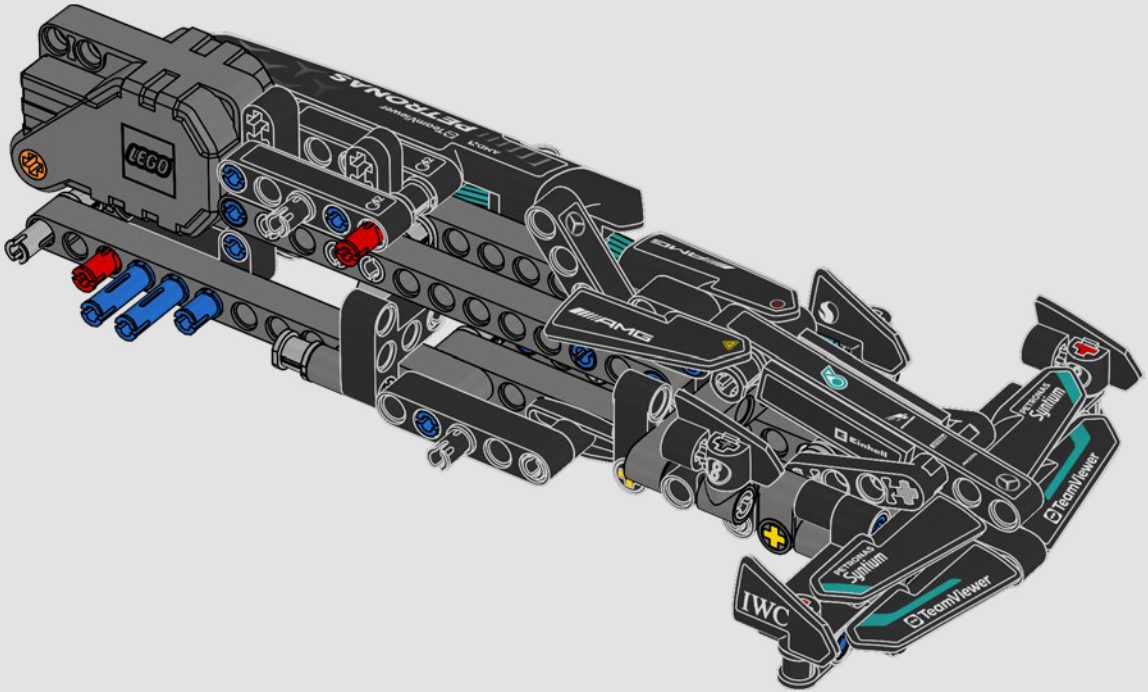

1x

64

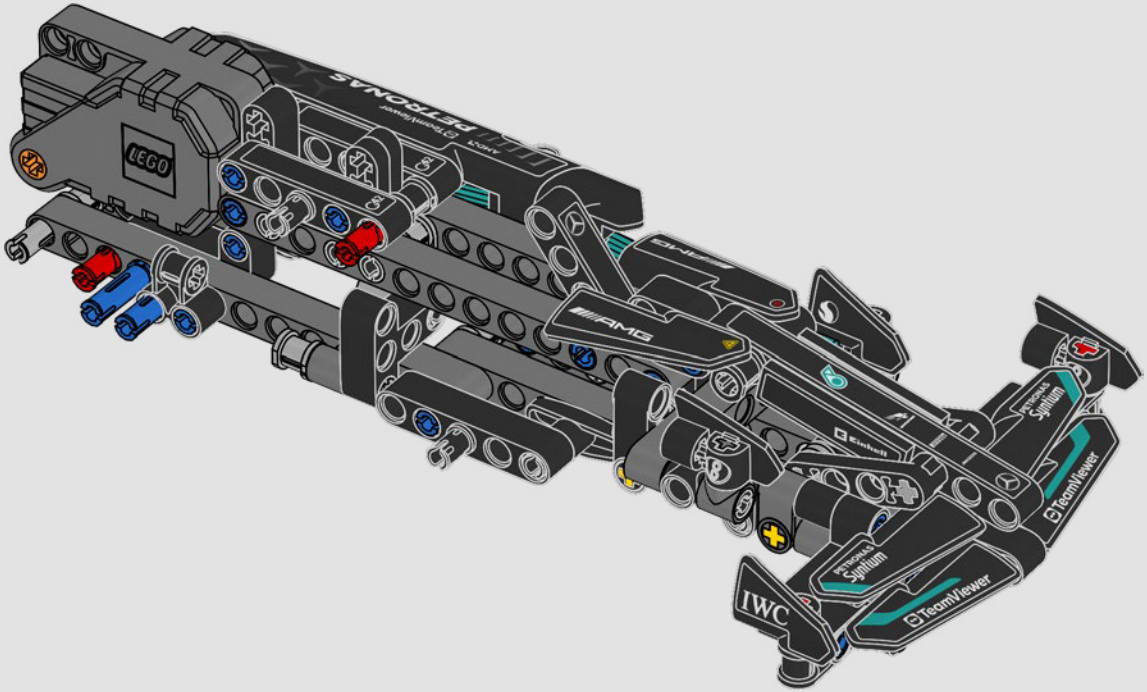

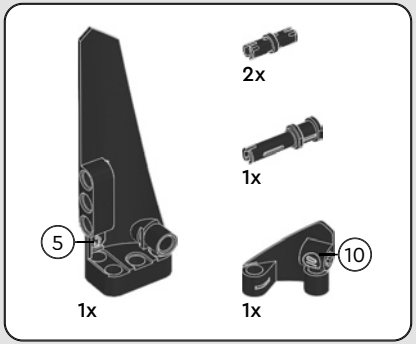
2x
1x
5
10
1x
1x

65

1

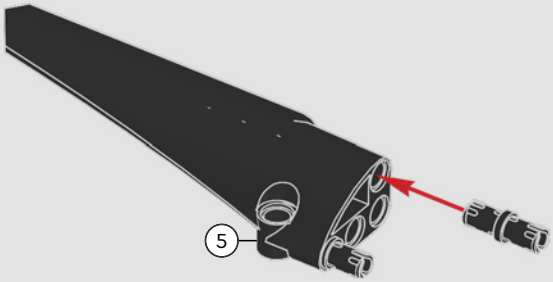
5

2

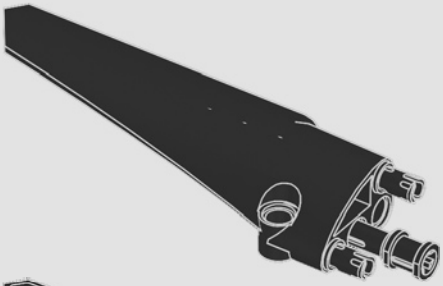

3

PETRONAS
TeamViewer
AMD
3

4

PETRONAS
TeamViewer
AMD
10

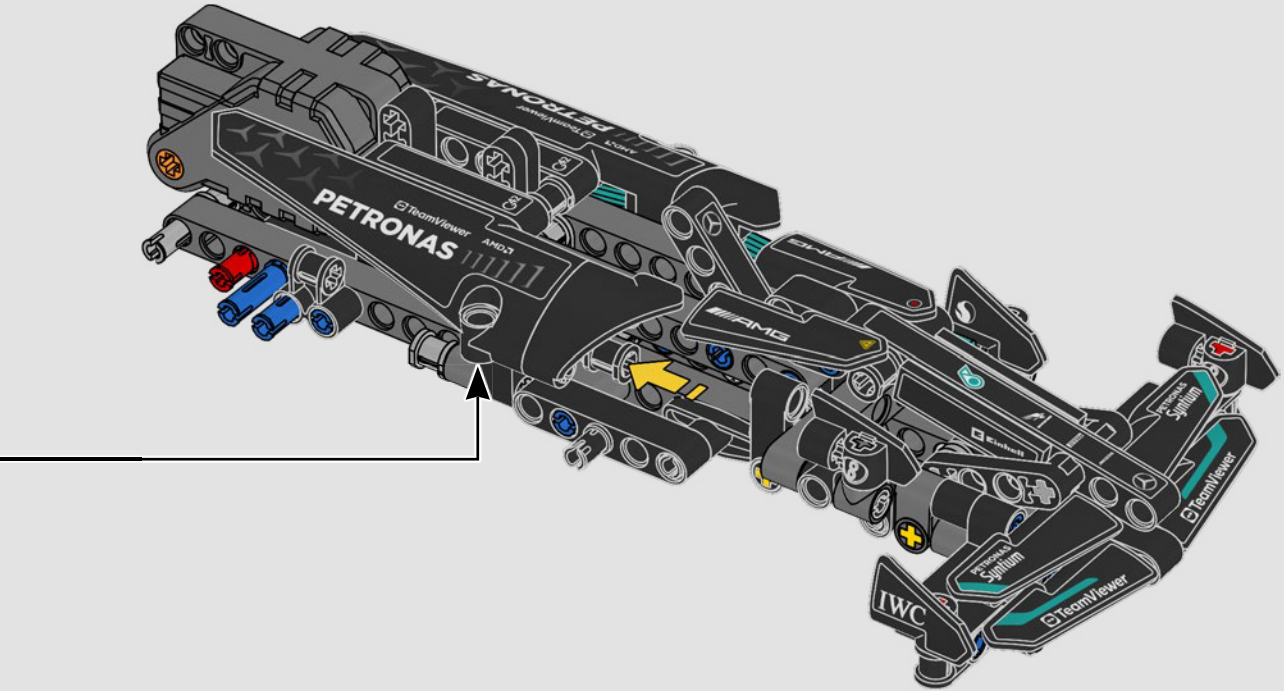
PETRONAS
TeamViewer
AMD
AMG
Einhell
IWC

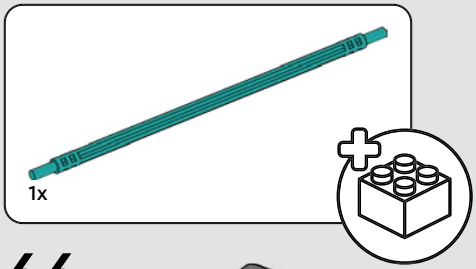

66

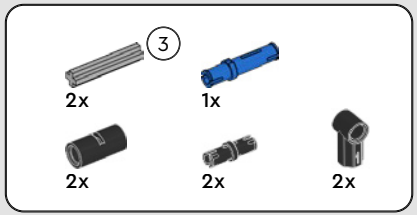

67

1

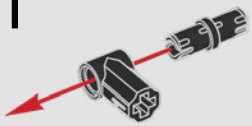

2

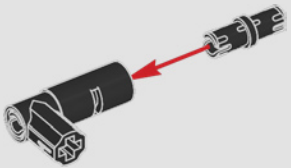

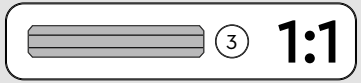

3

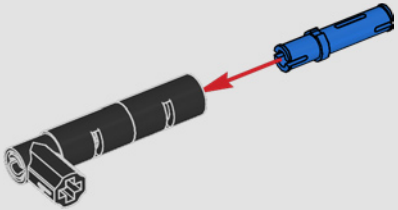

4

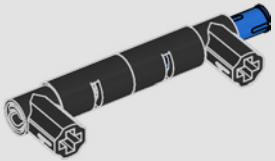

5

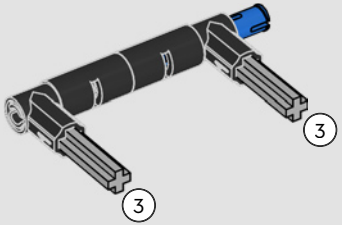

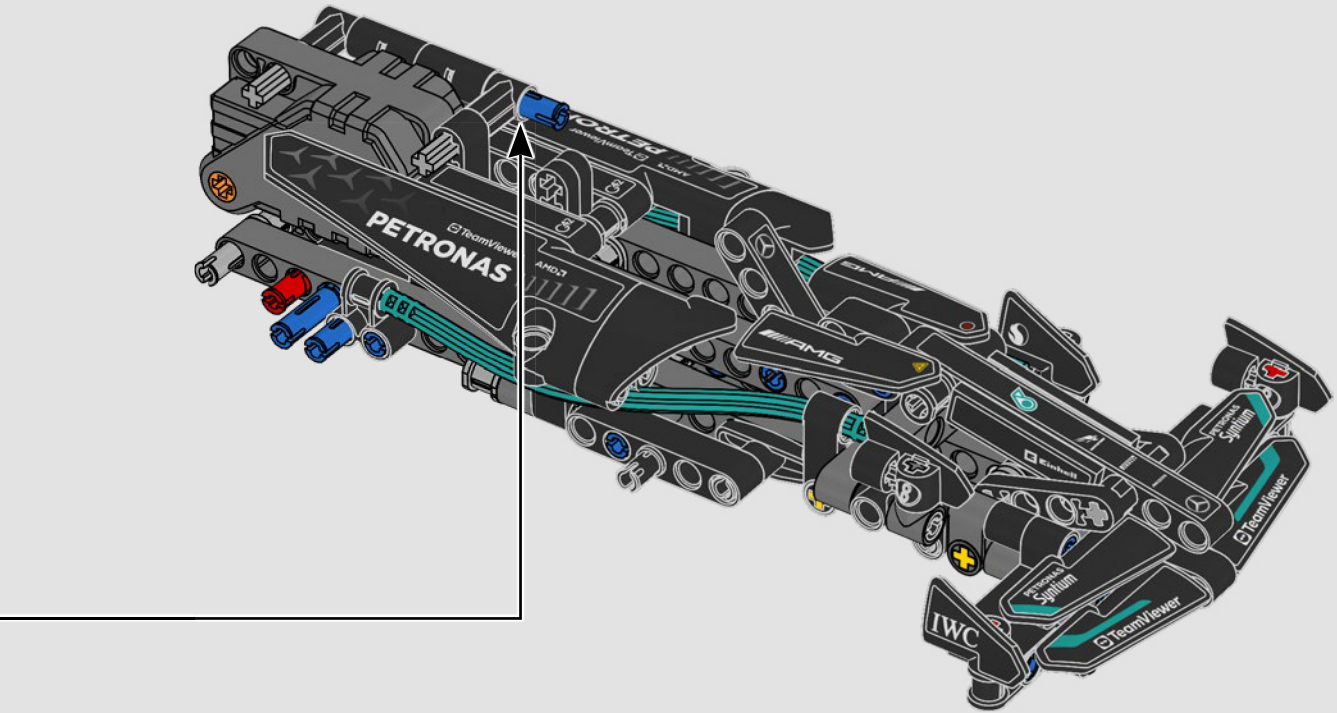
PETRONAS
TeamViewer
AMD
IWC

68

1

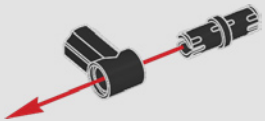

2

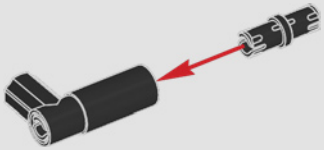

3

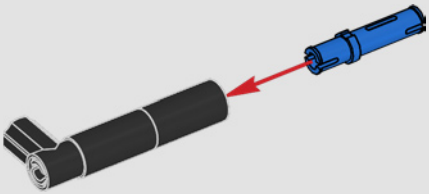

4

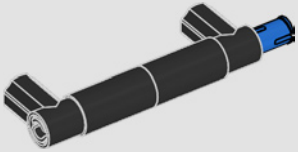

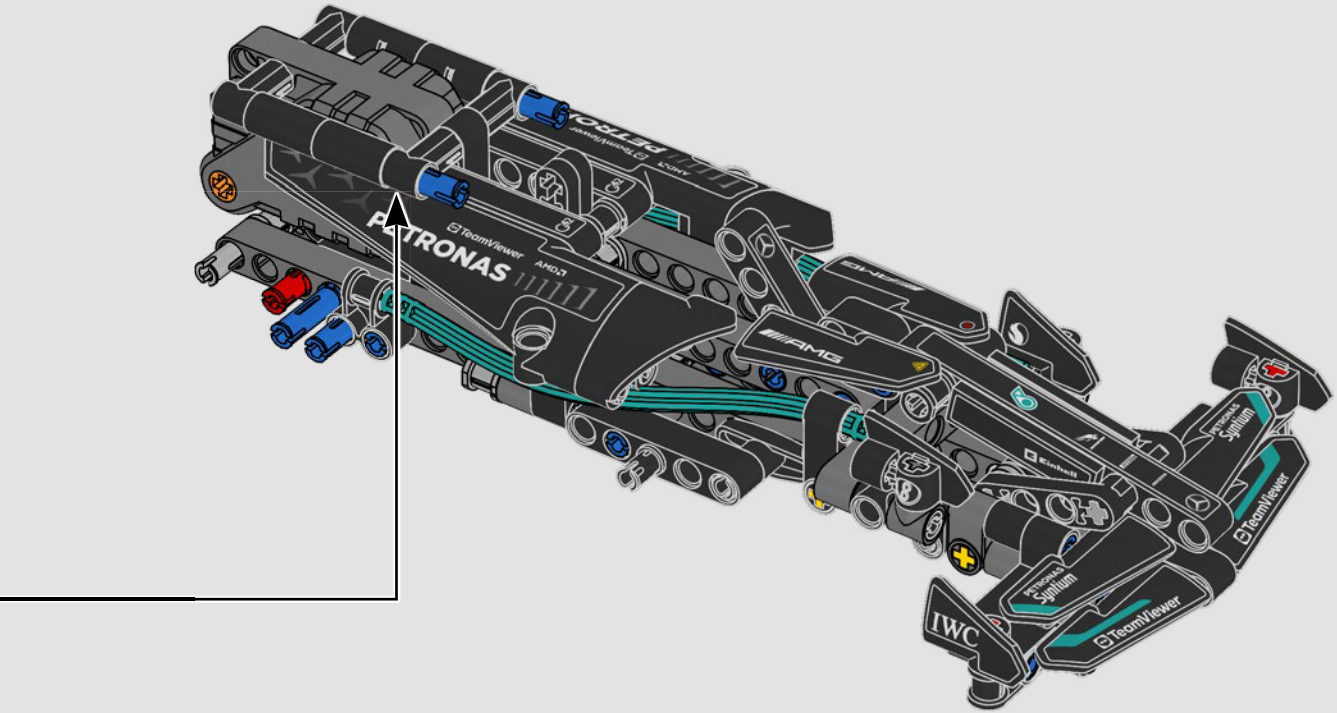
PETRONAS
TeamViewer
AMD
AMG
IWC
Sightium

5

1x

69

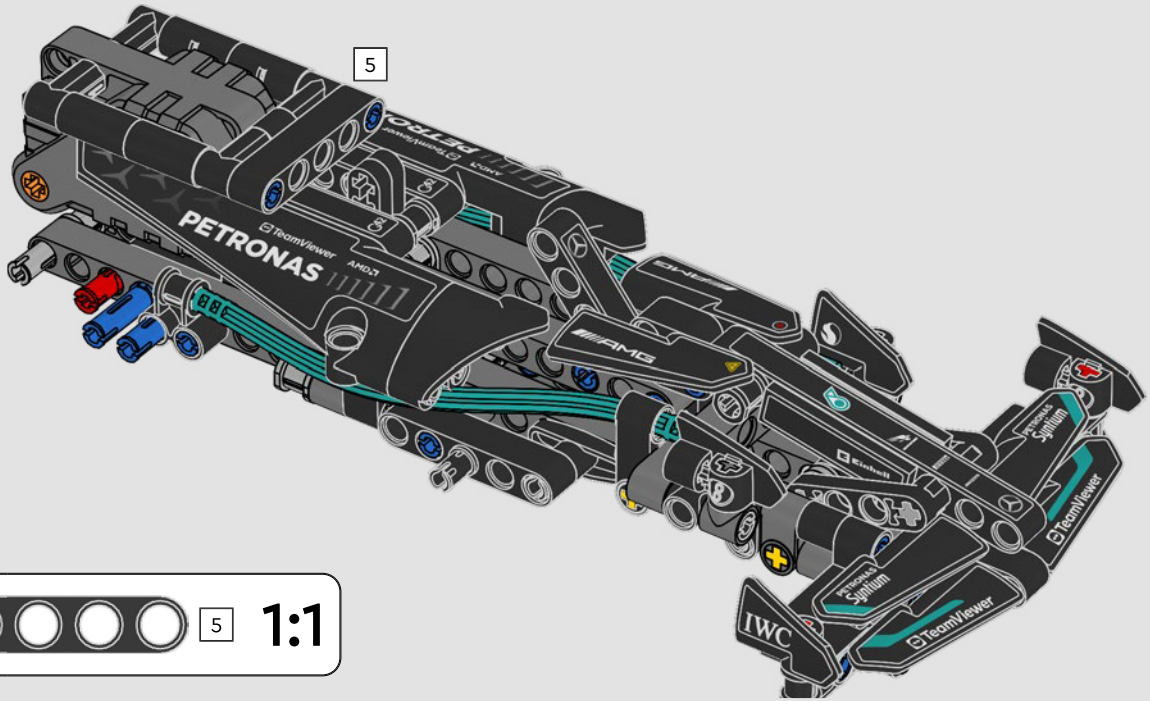

5 1:1

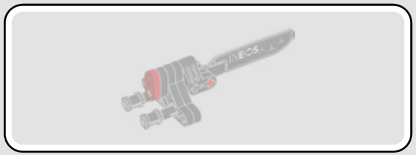

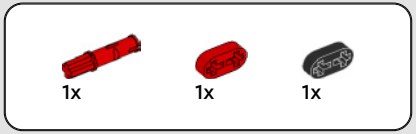

70

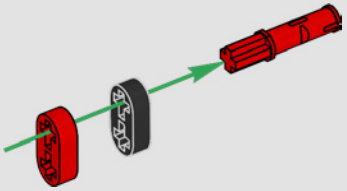

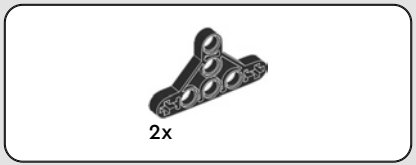

71

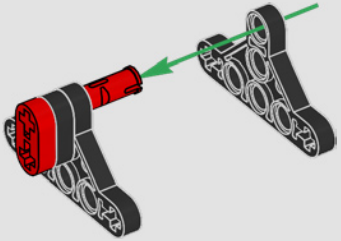

72

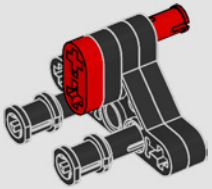

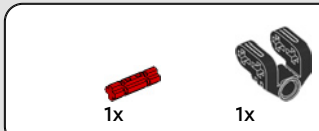

73

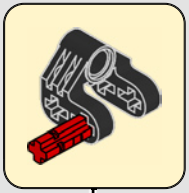

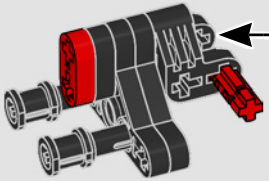

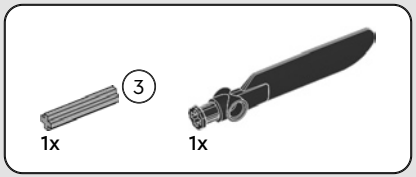

74

1

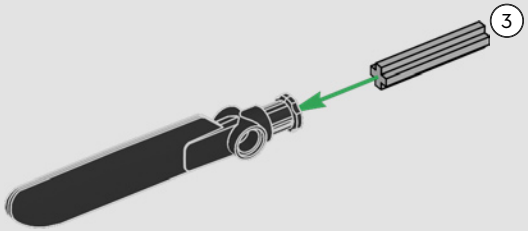

2

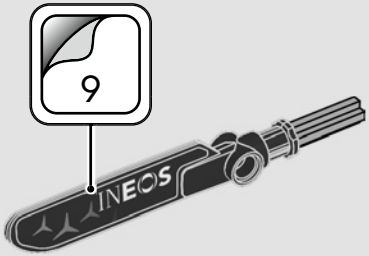

3

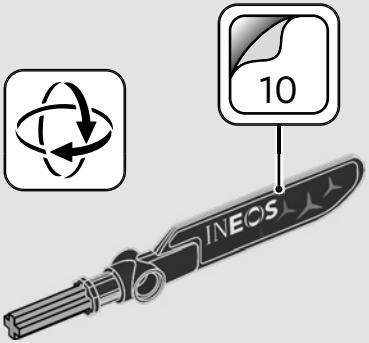

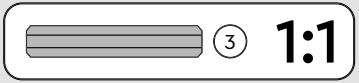

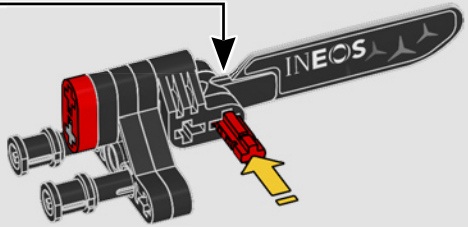

75

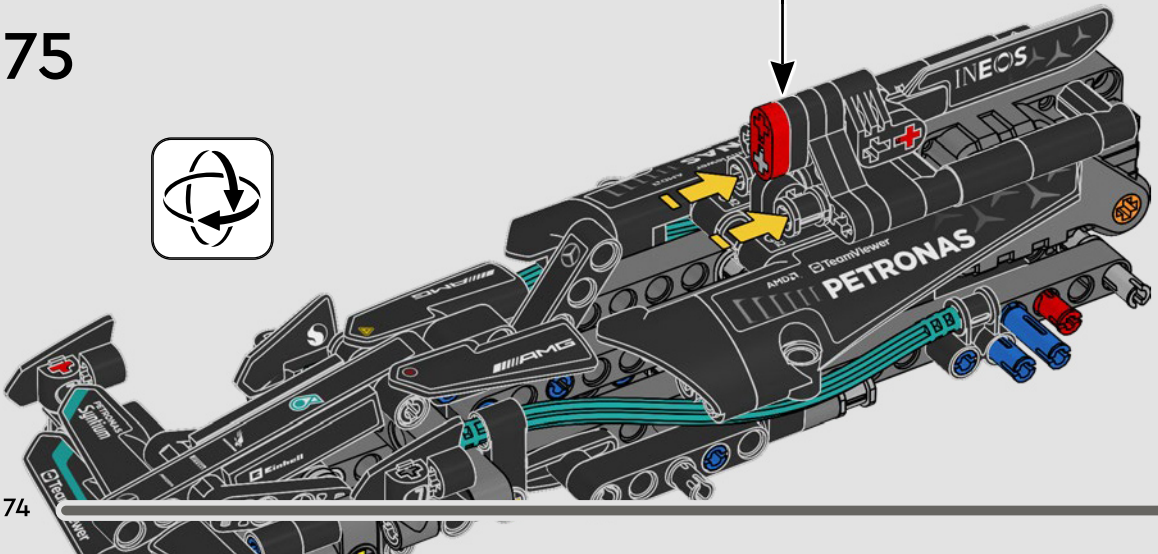

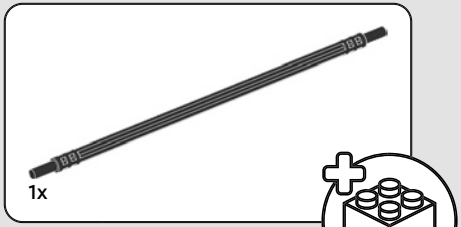
1x

76

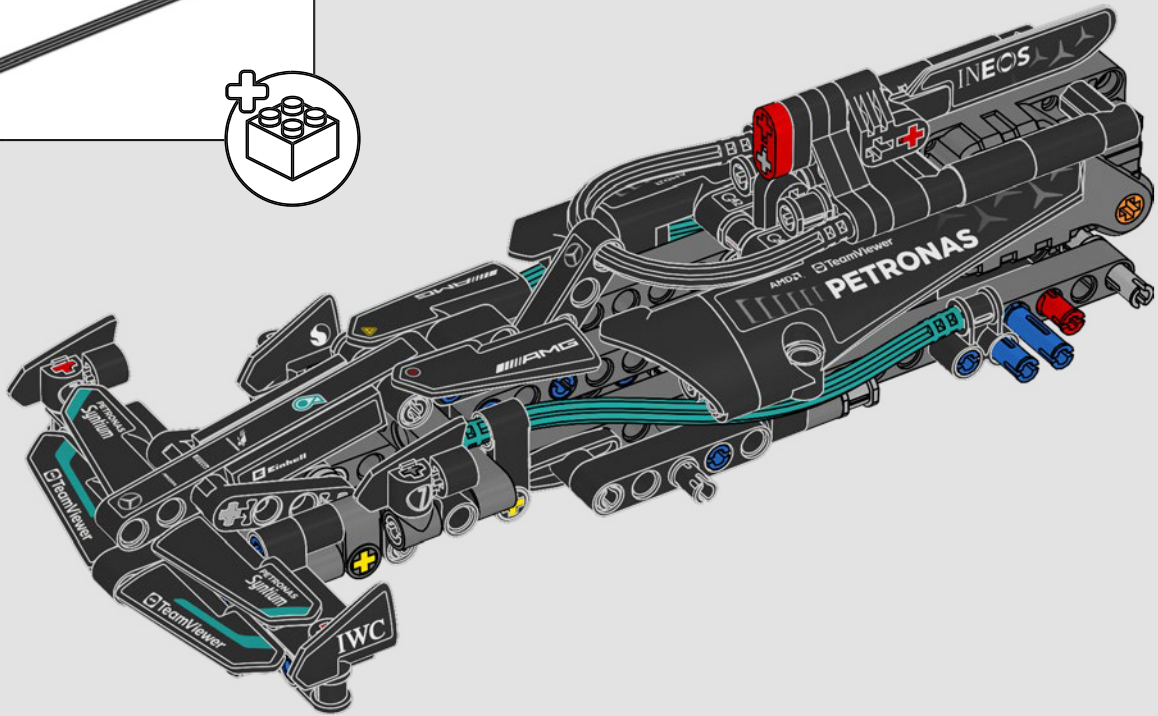
INEOS
PETRONAS
TeamViewer
AMG
Einhell
PETRONAS Syntium
TeamViewer
IWC

4
4x

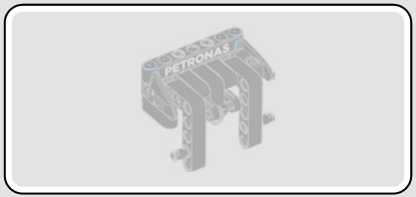

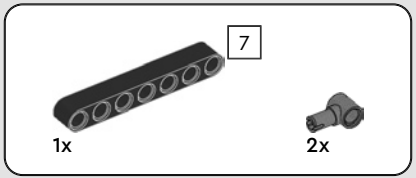

77

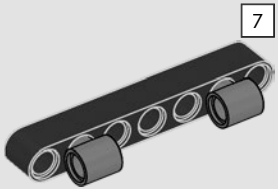

78

79

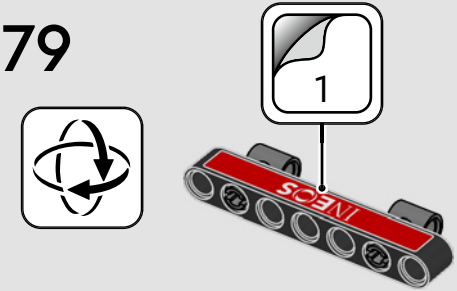

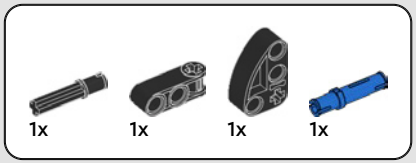

80

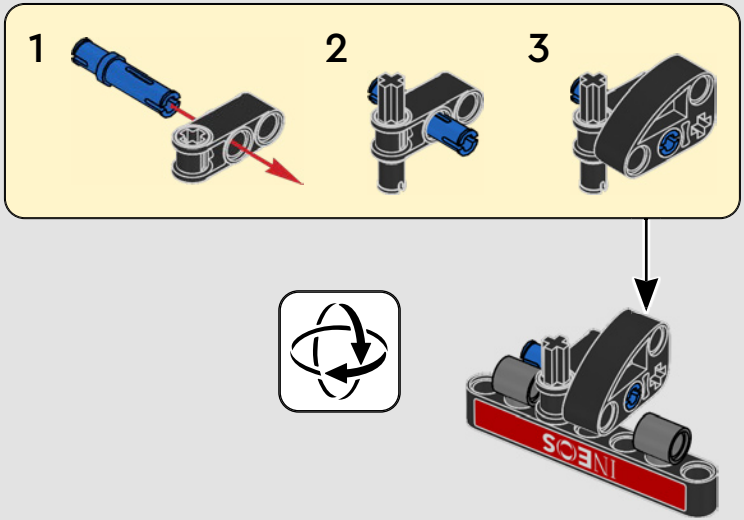

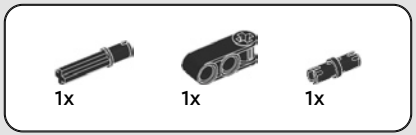

81

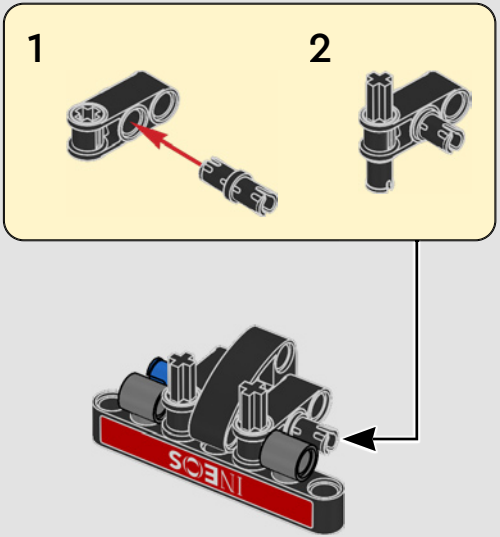

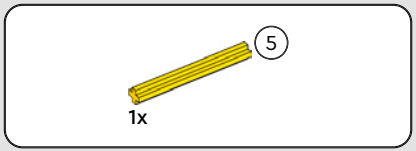

82

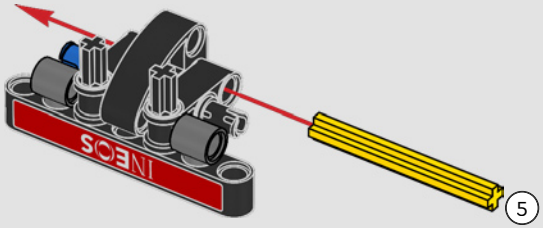

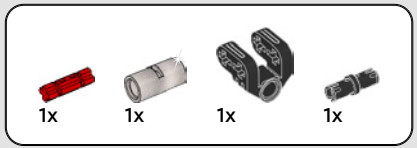

83

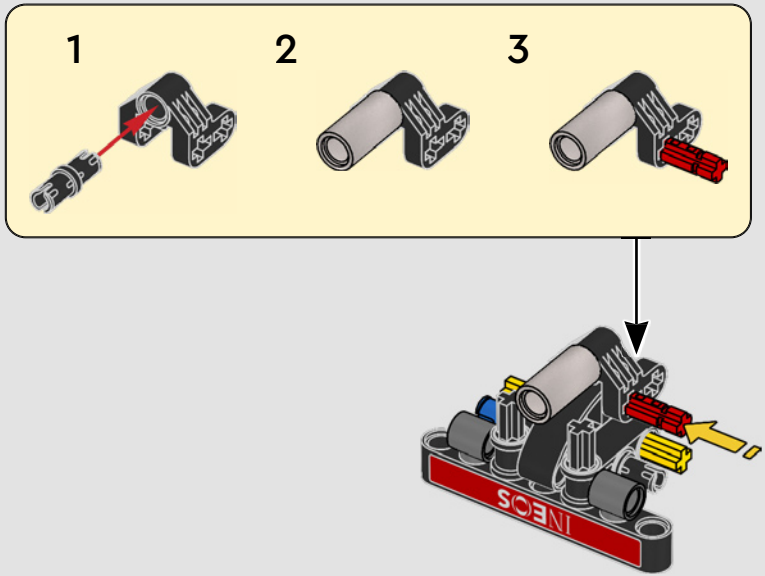

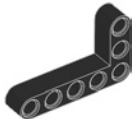

2x

84

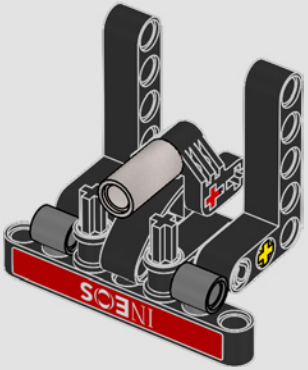

2x

85

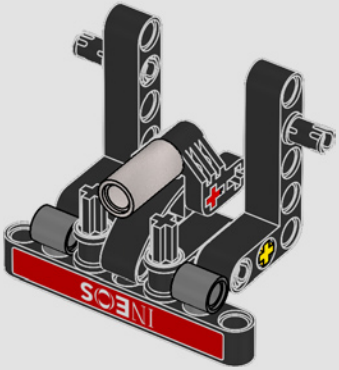

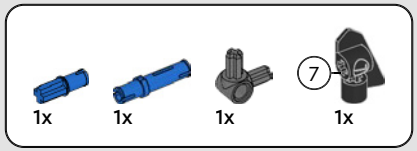

86

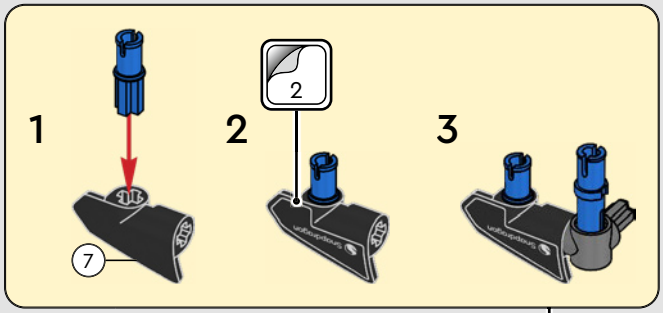

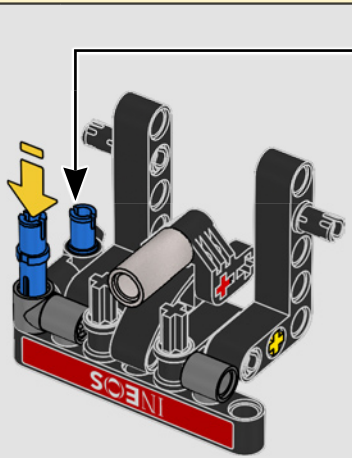

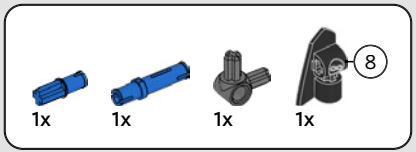

87

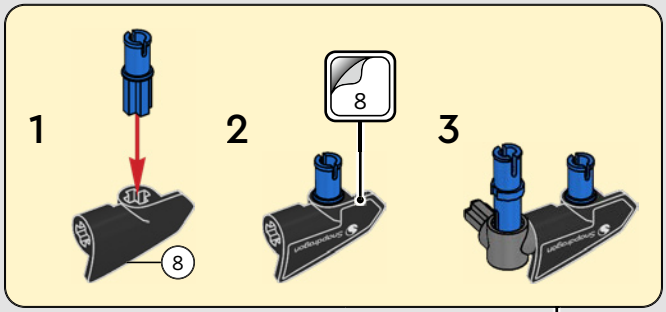

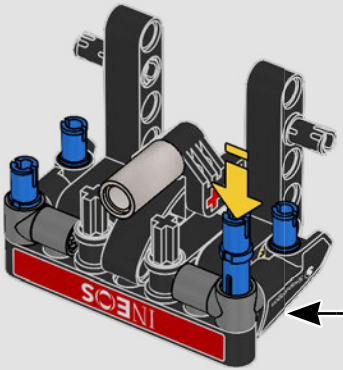

2x

88

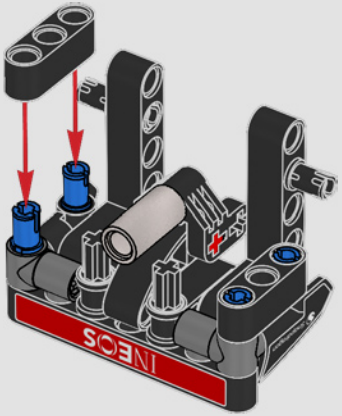

89

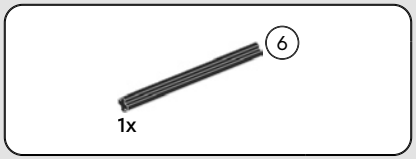

90

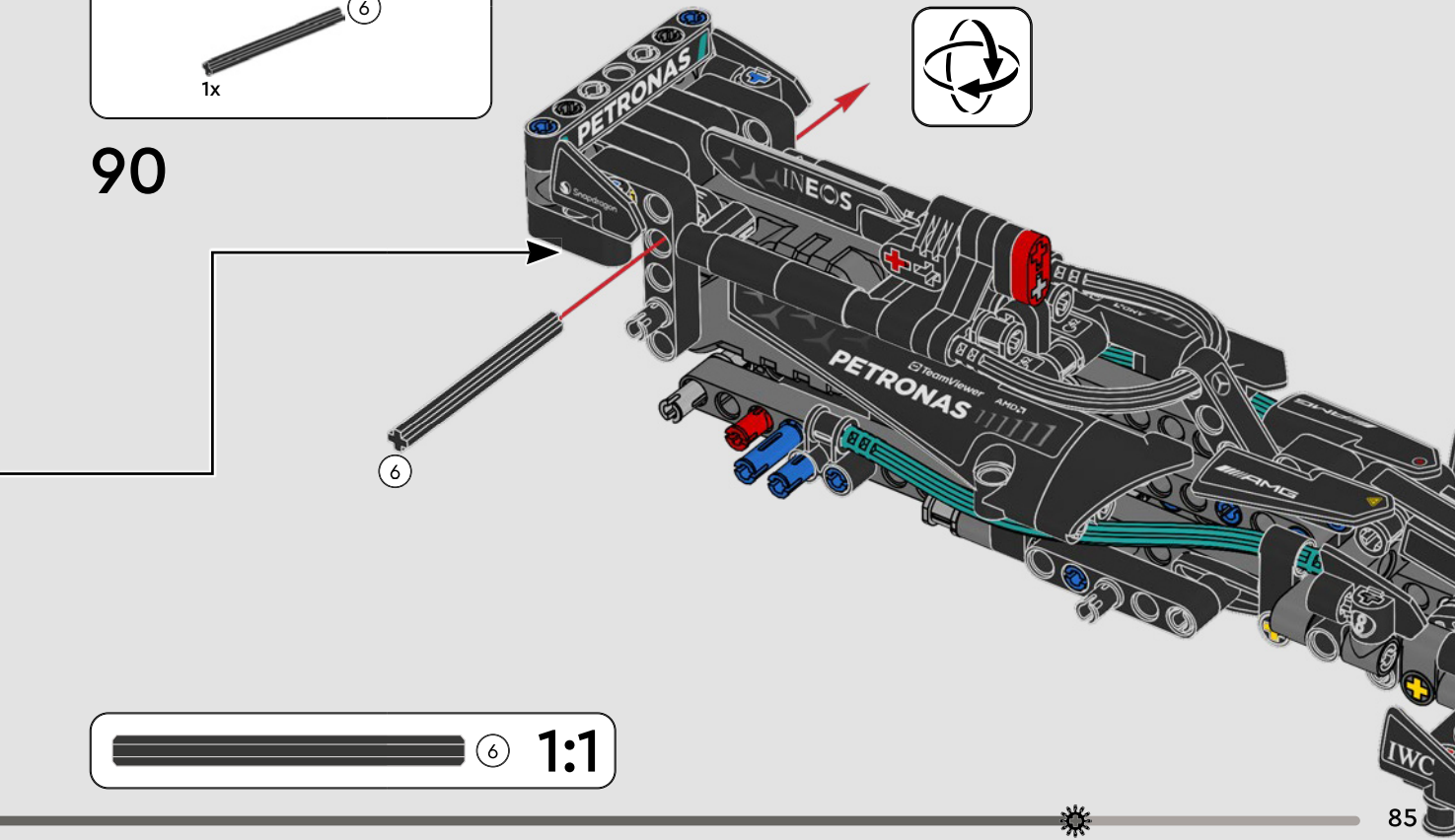

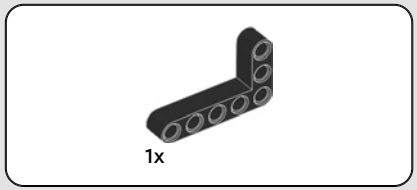

91

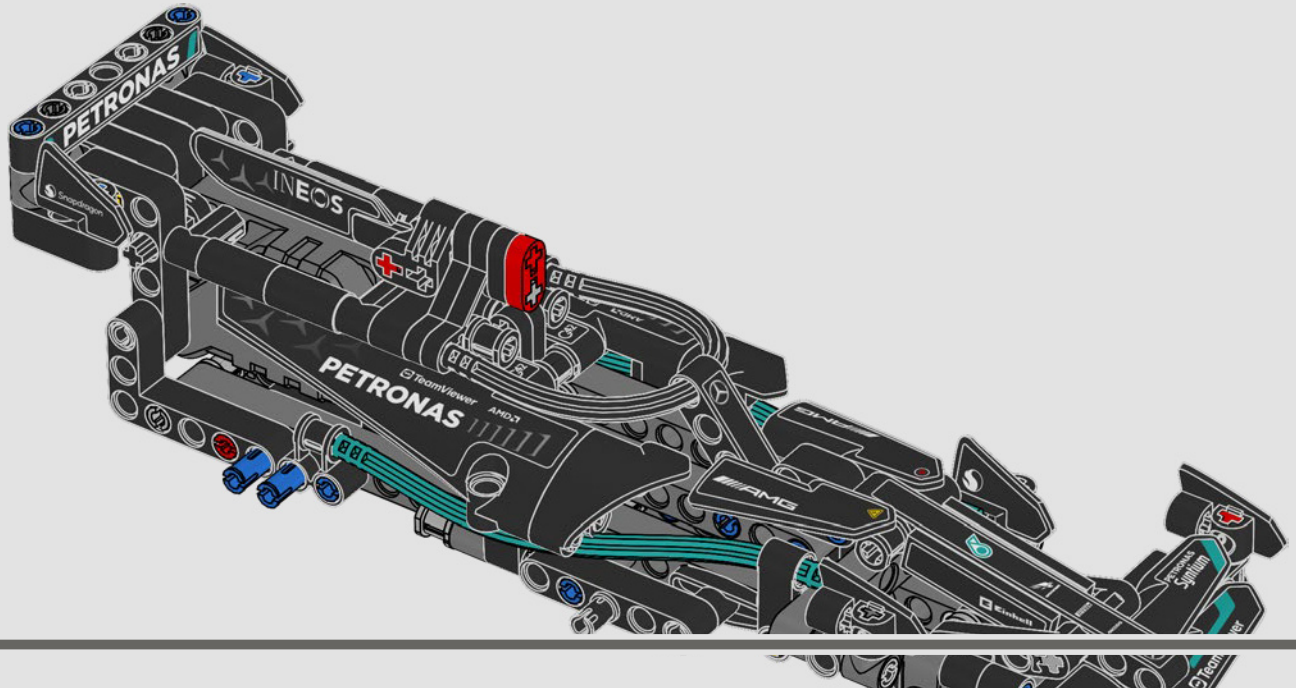

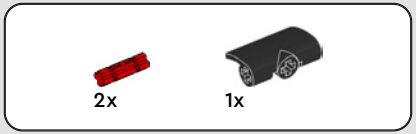

92

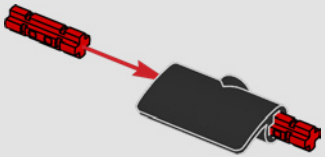

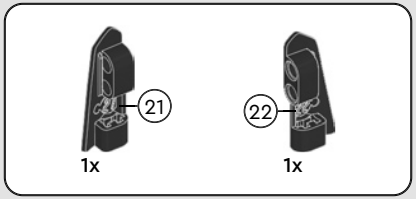

93

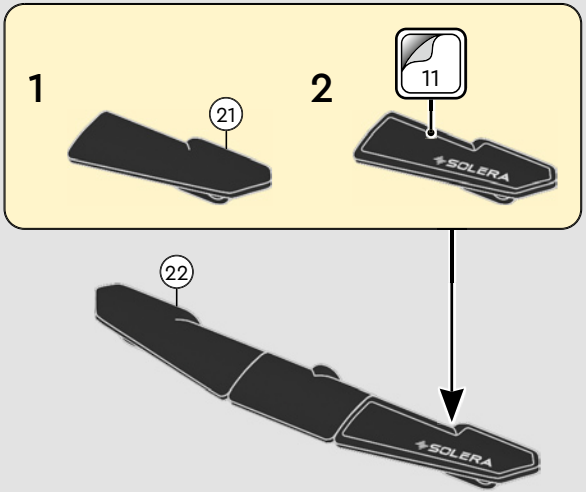

94

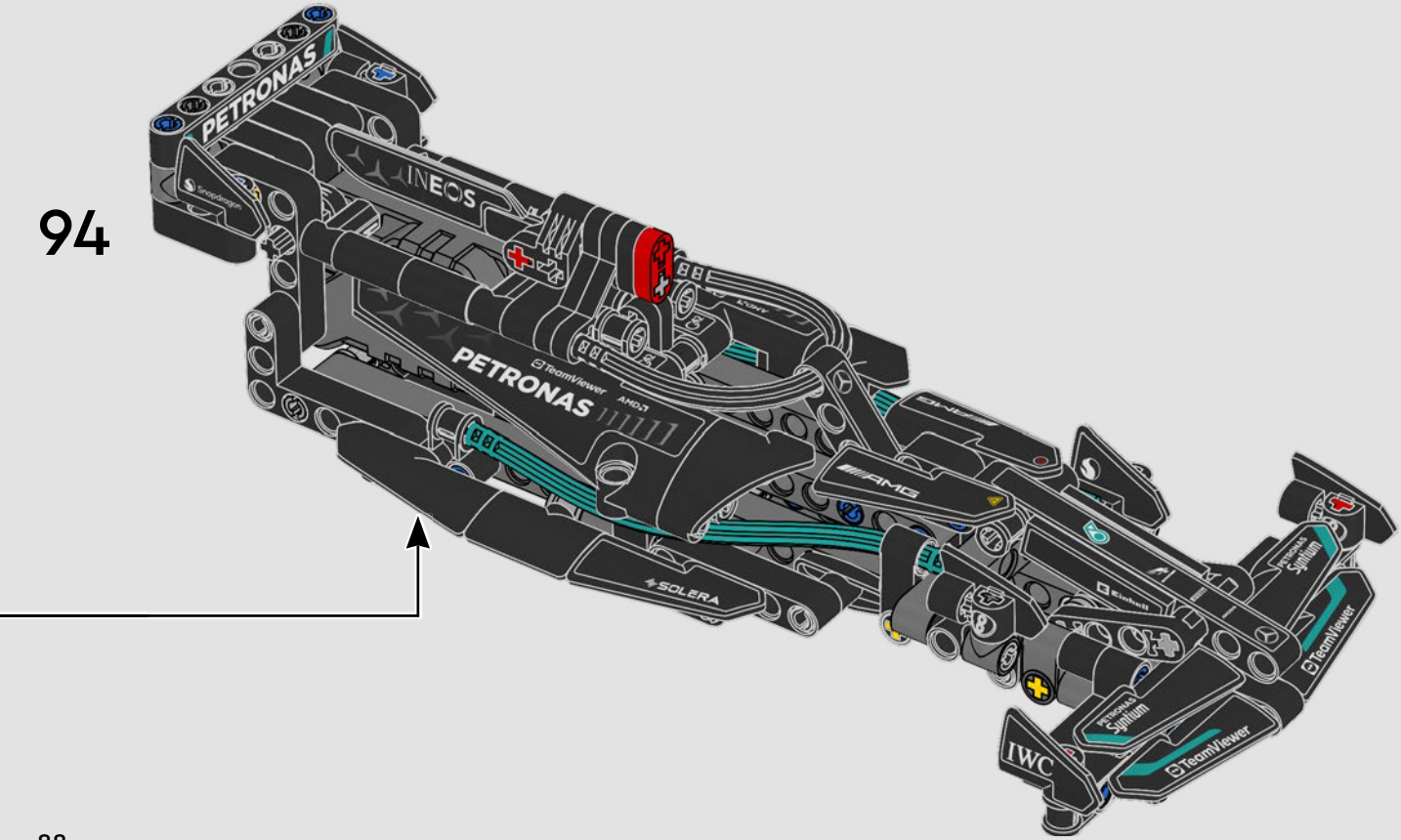
PETRONAS
INEOS
PETRONAS
TeamViewer
AMD
AMG
SOLERA
Shell
Synthium
TeamViewer
IWC

1x

95

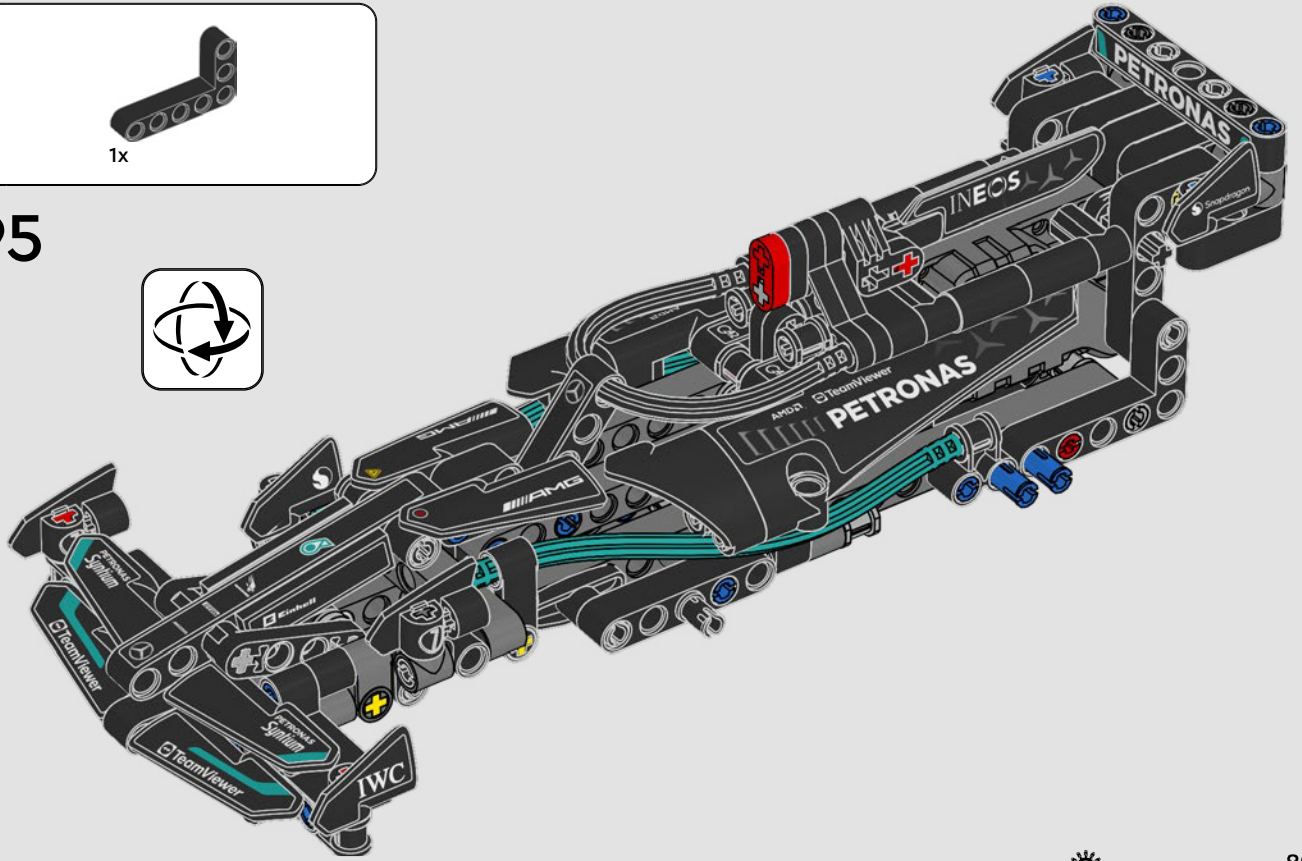
PETRONAS
INEOS
Snapdragon
AMD
TeamViewer
PETRONAS
AMG
Shell
TeamViewer
Shell
TeamViewer
IWC

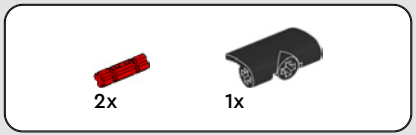

96

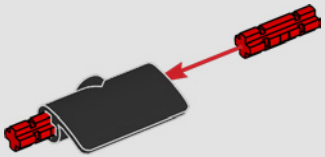

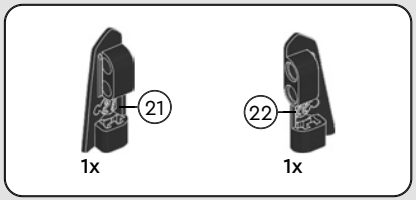

97

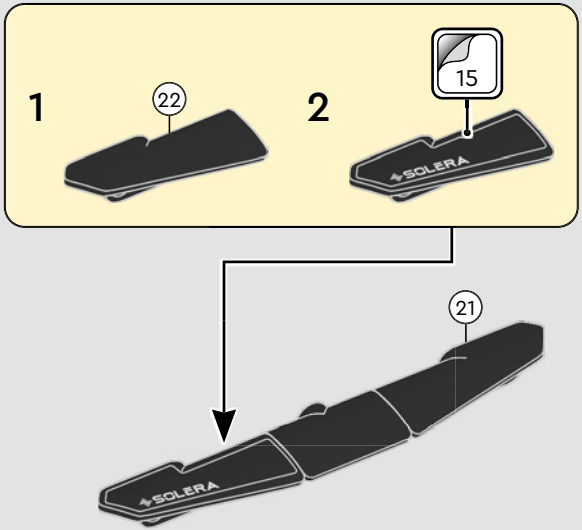

98

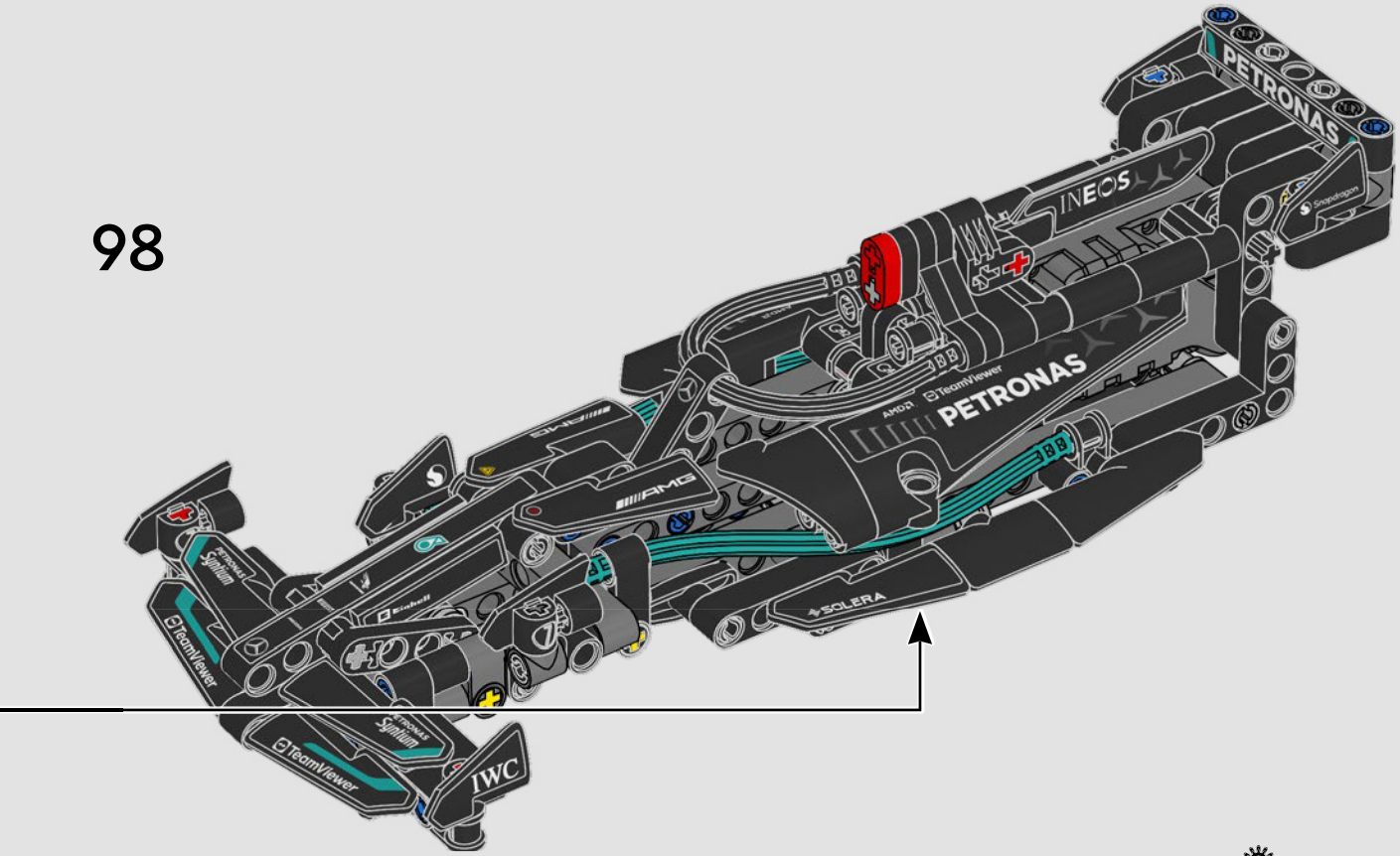
PETRONAS
INEOS
Snapdragon
AMD
TeamViewer
PETRONAS
AMG
SOLERA
Petronas Syntium
TeamViewer
Petronas Syntium
TeamViewer
IWC

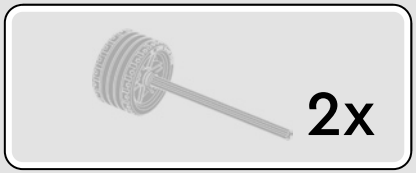

99

1

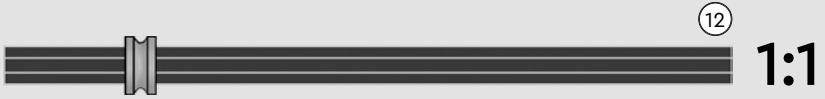

2

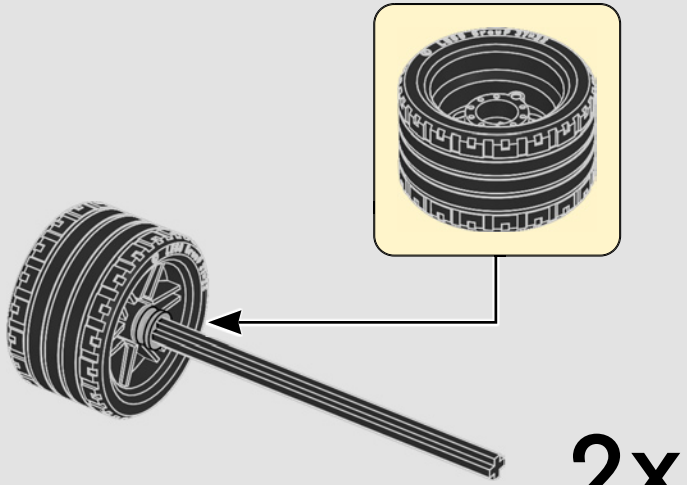

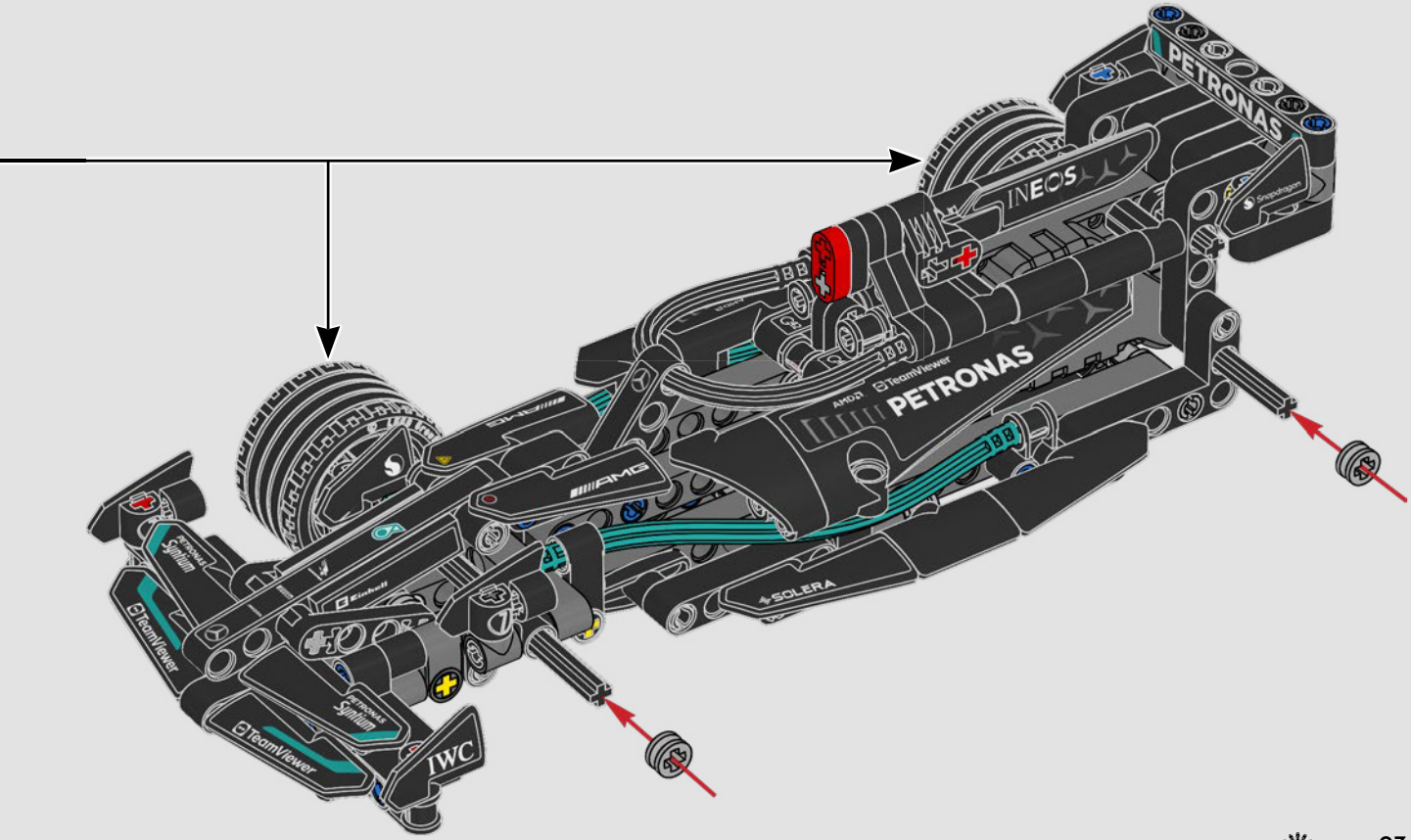
PETRONAS
INEOS
TeamViewer
PETRONAS
AMD
AMG
SOLERA
TeamViewer
TeamViewer
IWC

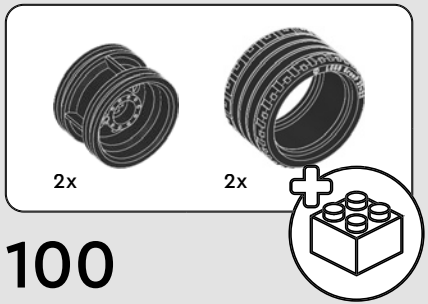

100

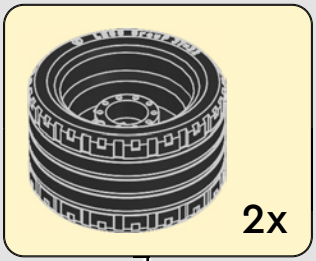

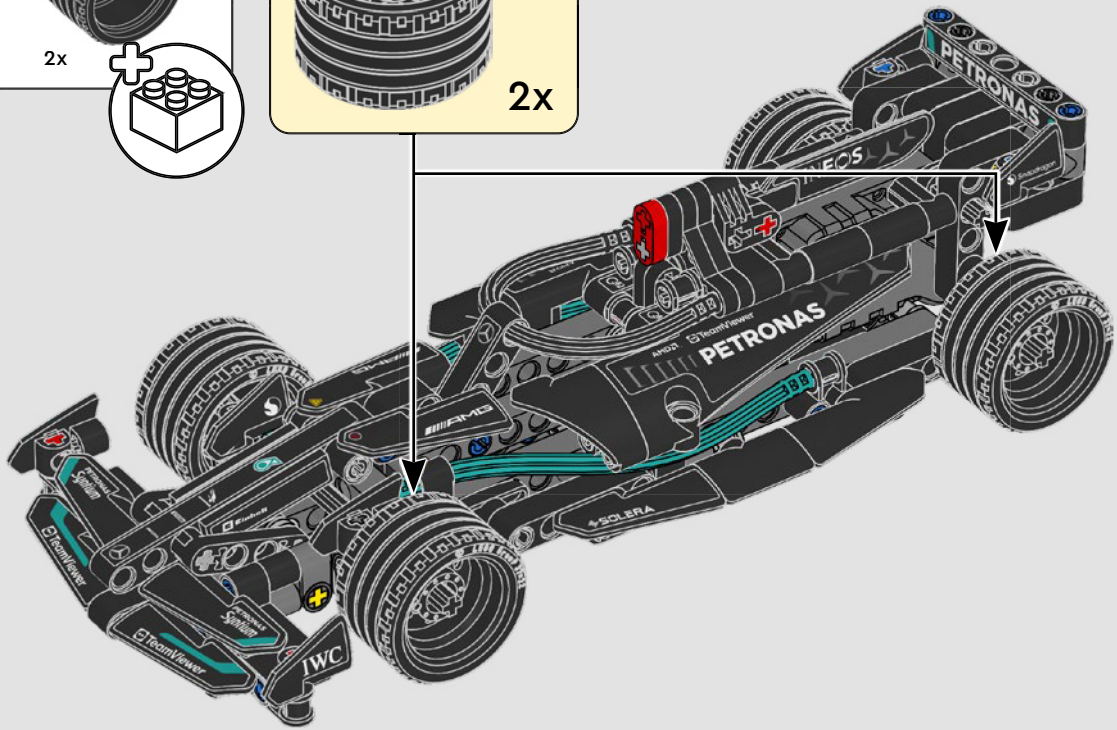

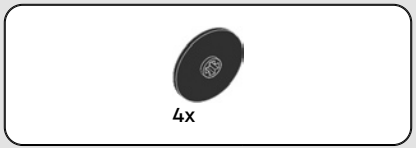

101

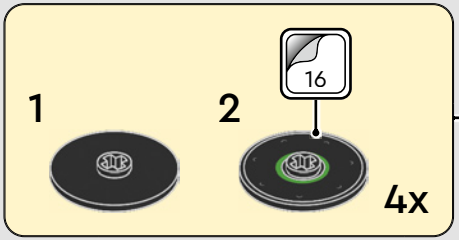

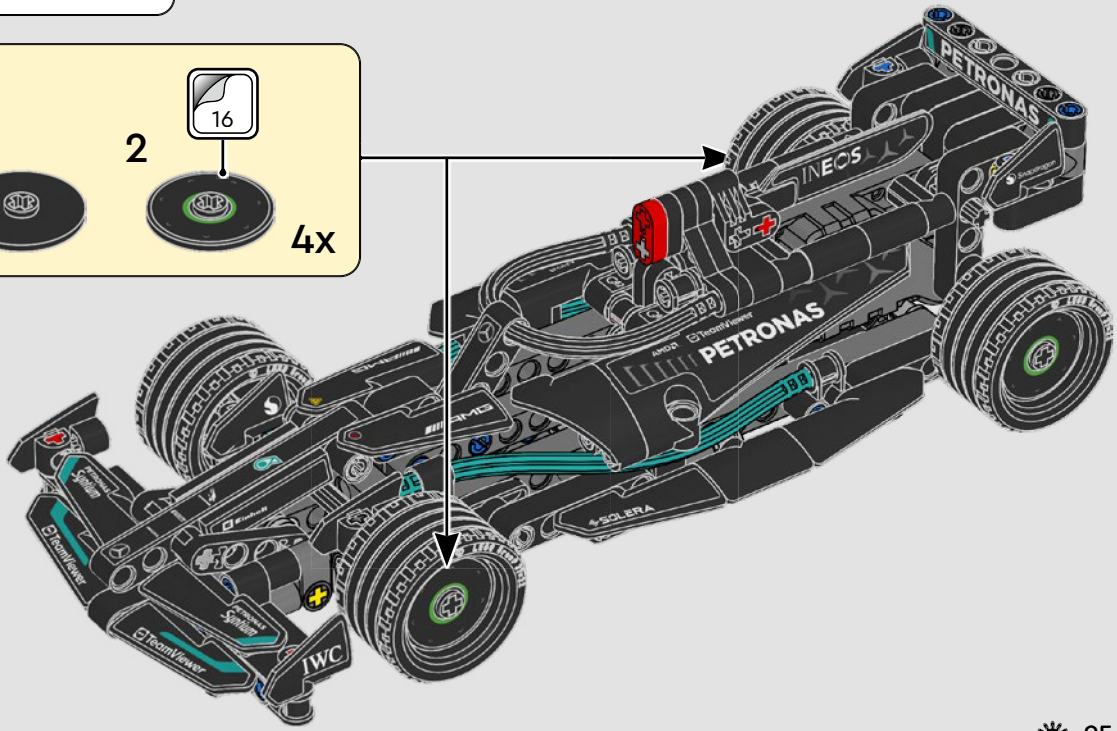

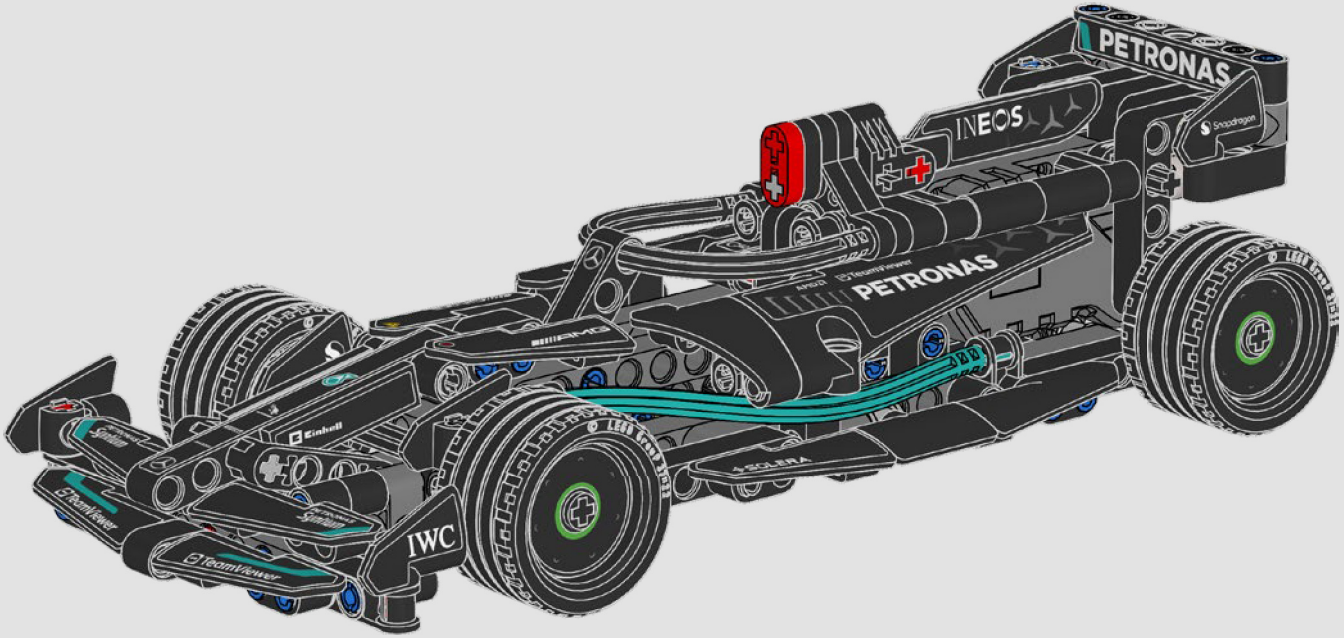
PETRONAS
INEOS
Snapdragon
PETRONAS
TeamViewer
IWC
SOLERA
Einhell

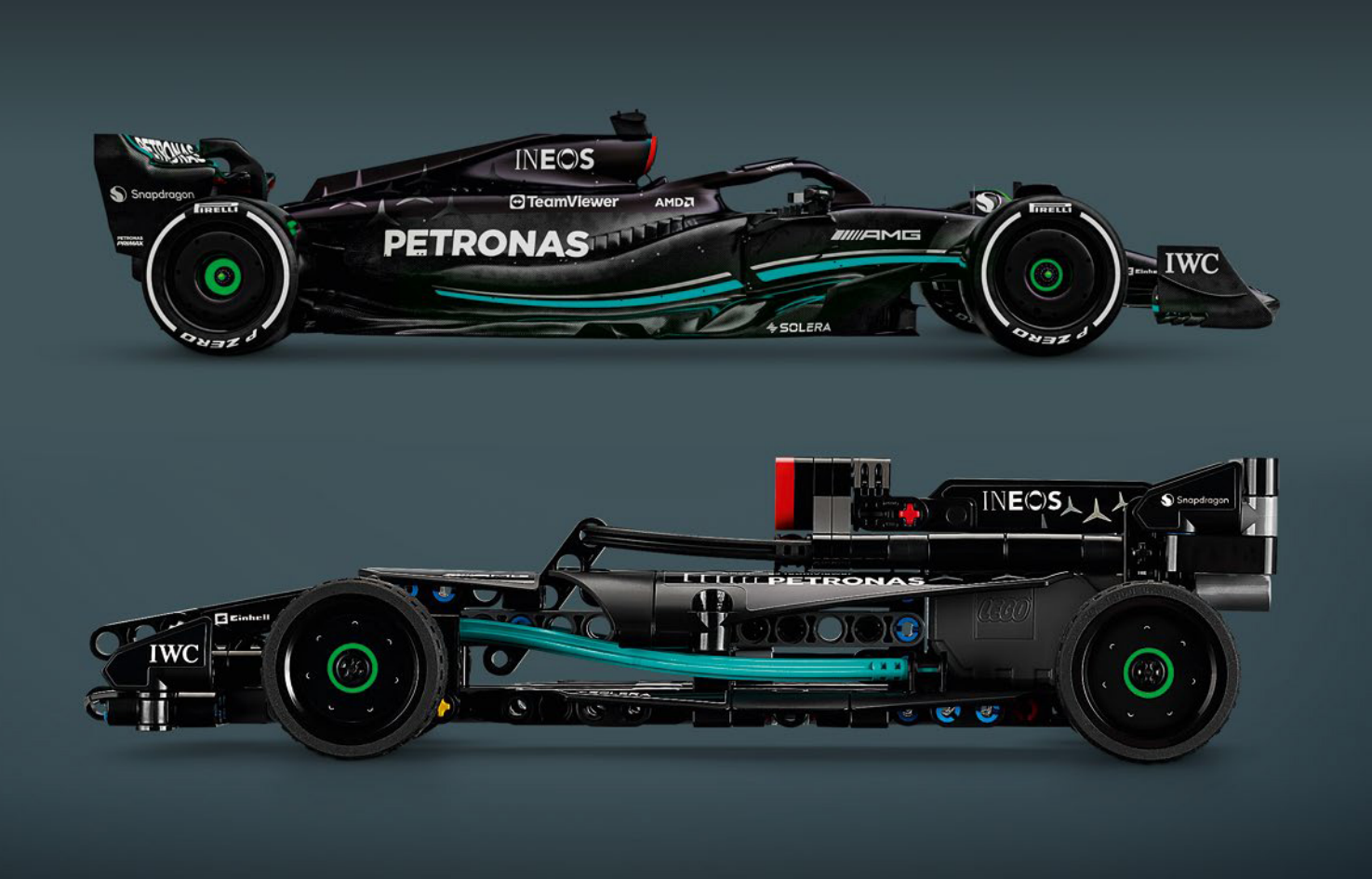
INEOS
Snapdragon
TeamViewer
AMD
PETRONAS
AMG
IWC
PIRELLI
P ZERO
SOLERA
Einhell
LEGO

LEGO TECHNIC

42171
MERCEDES-AMG F1 W14 E PERFORMANCE

42165
MERCEDES-AMG F1 W14 PULL-BACK

1x
6245499

3x
6130008
5

1x
6395635

2x
6261374

6x
6282144

4x
6005331

1x
6143751

2x
4495931
7

6x
4522937
13

6x
6271165

8x
4211815
3

5x
6321747

1x
6331441

4x
6378120

1x
6371442

8x
4142865

6x
6209519

4x
4206482

31x
6299413

3x
6366229

4x
6284699

4x
6121485

3x
6426589
7

1x
6338428

5x
6319983
22

3x
6426590
8

5x
6316923
21

24x
6279875

3x
6265091

2x
6280394

1x
6326047

4x
6173119

2x
6325521

4x
4218868

2x
6271810

6x
6273708

2x
6279021

5x
6089119

6x
6321745

2x
4552347

2x
4142822

1x
4558731
6

1x
4558774
5

1x
6426604
10

1x
6426603
9

2x
6331026

7x
6271825

2x
6331570

2x
243126

4x
4299389

4x
4499234

2x
6331437

6x
4142135
5

4x
4142823

1x
370626
6

1x
4495935
7

1x
6442361

1x
4645732
9

2x
370826
12

1x
6057525

2x
6482587

YOU COULD

WIN

Scan this QR code or go to **LEGO.COM/PRODUCTFEEDBACK** and give us your short feedback about this LEGO® set for a chance to win a cool LEGO prize.

Terms and Conditions apply*

EN: YOU COULD WIN. Terms and Conditions apply* **DE: Du könntest GEWINNEN.** Es gelten die Teilnahmebedingungen* **FR: Tu pourrais GAGNER.** Des conditions s'appliquent* **IT: Potresti VINCERE tu.** Termini e condizioni sono applicabili* **ES: Puedes GANAR.** Aplican términos y condiciones* **PT: Poderá GANHAR.** Aplicam-se termos e condições* **ZH:** 轻松获奖. 条款和条件适用* **PL: Szansa na WYGRANĄ.** Obowiązują warunki korzystania* **CS: Máte šanci VYHRÁT.** Platí všeobecné smluvní podmínky* **SK: Máte šancu VYHRAŤ.** Platia všeobecné zmluvné podmienky* **HU: TE IS NYERHETSZ.** Felhasználási feltételek érvényesek* **RO: Ai putea CÂȘTIGA.** Se aplică termeni și condiții* **BG: Можете да СПЕЧЕЛИТЕ.** Има определени правила и условия* **LV: Tu vari LAIMĒT.** Ir spēkā noteikumi un nosacījumi.* **ET: Sul on võimalus VÕITA.** Kehtivad tingimused* **LT: Jūs galite LAIMĖTI.** Taikomos sąlygos*

**LEGO.com/productfeedback-terms*

LEGO and the LEGO logo are trademarks of the/sont des marques de commerce du/son marcas registradas de LEGO Group. ©2024 The LEGO Group.
Manufactured under licence from Mercedes-Benz Grand Prix Limited.
"AMG" and "Three Pointed Star in a Ring" are trademarks of Mercedes-Benz Group AG. All other logos featured on the Licensed Product are used with the permission of their respective owners all of whom reserve their respective rights in the same.

6507098