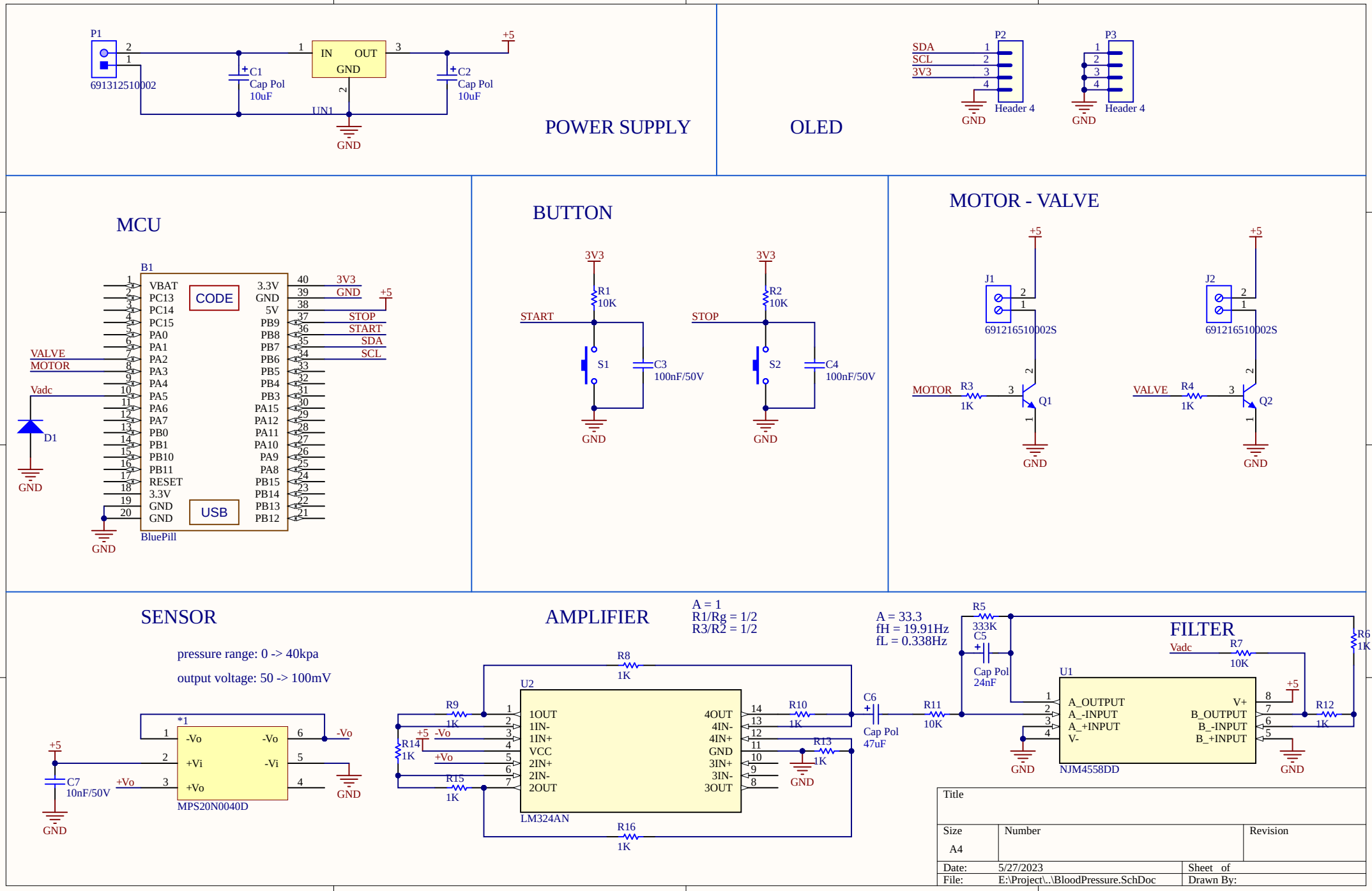
POWER SUPPLY
P1
691312510002
C1
Cap Pol
10uF
IN
OUT
GND
UN1
C2
Cap Pol
10uF
+5
GND
OLED
P2
SDA
SCL
3V3
Header 4
P3
Header 4
MCU
B1
CODE
USB
BluePill
VBAT
PC13
PC14
PC15
PA0
PA1
PA2
PA3
PA4
PA5
PA6
PA7
PB0
PB1
PB10
PB11
RESET
3.3V
GND
GND
3.3V
GND
5V
PB9
PB8
PB7
PB6
PB5
PB4
PB3
PA15
PA12
PA11
PA10
PA9
PA8
PB15
PB14
PB13
PB12
VALVE
MOTOR
Vadc
D1
STOP
START
SDA
SCL
BUTTON
3V3
R1
10K
START
S1
C3
100nF/50V
R2
10K
STOP
S2
C4
100nF/50V
MOTOR - VALVE
J1
691216510002S
J2
691216510002S
MOTOR
R3
1K
Q1
VALVE
R4
1K
Q2
SENSOR
pressure range: 0 -> 40kpa
output voltage: 50 -> 100mV
*1
-Vo
+Vi
+Vo
-Vi
MPS20N0040D
C7
10nF/50V
AMPLIFIER
A = 1
R1/Rg = 1/2
R3/R2 = 1/2
U2
1OUT
1IN-
1IN+
VCC
2IN+
2IN-
2OUT
4OUT
4IN-
4IN+
GND
3IN+
3IN-
3OUT
LM324AN
R8
1K
R9
1K
R10
1K
R11
10K
R12
1K
R13
1K
R14
1K
R15
1K
R16
1K
C6
Cap Pol
47uF
A = 33.3
fH = 19.91Hz
fL = 0.338Hz
R5
333K
C5
Cap Pol
24nF
FILTER
Vadc
R7
10K
R6
1K
U1
A_OUTPUT
A_-INPUT
A_+INPUT
V-
V+
B_OUTPUT
B_-INPUT
B_+INPUT
NJM4558DD
Title
Size
A4
Number
Revision
Date:
5/27/2023
Sheet of
File:
E:\Project\..\BloodPressure.SchDoc
Drawn By: