ECO	Description	Date	Approved

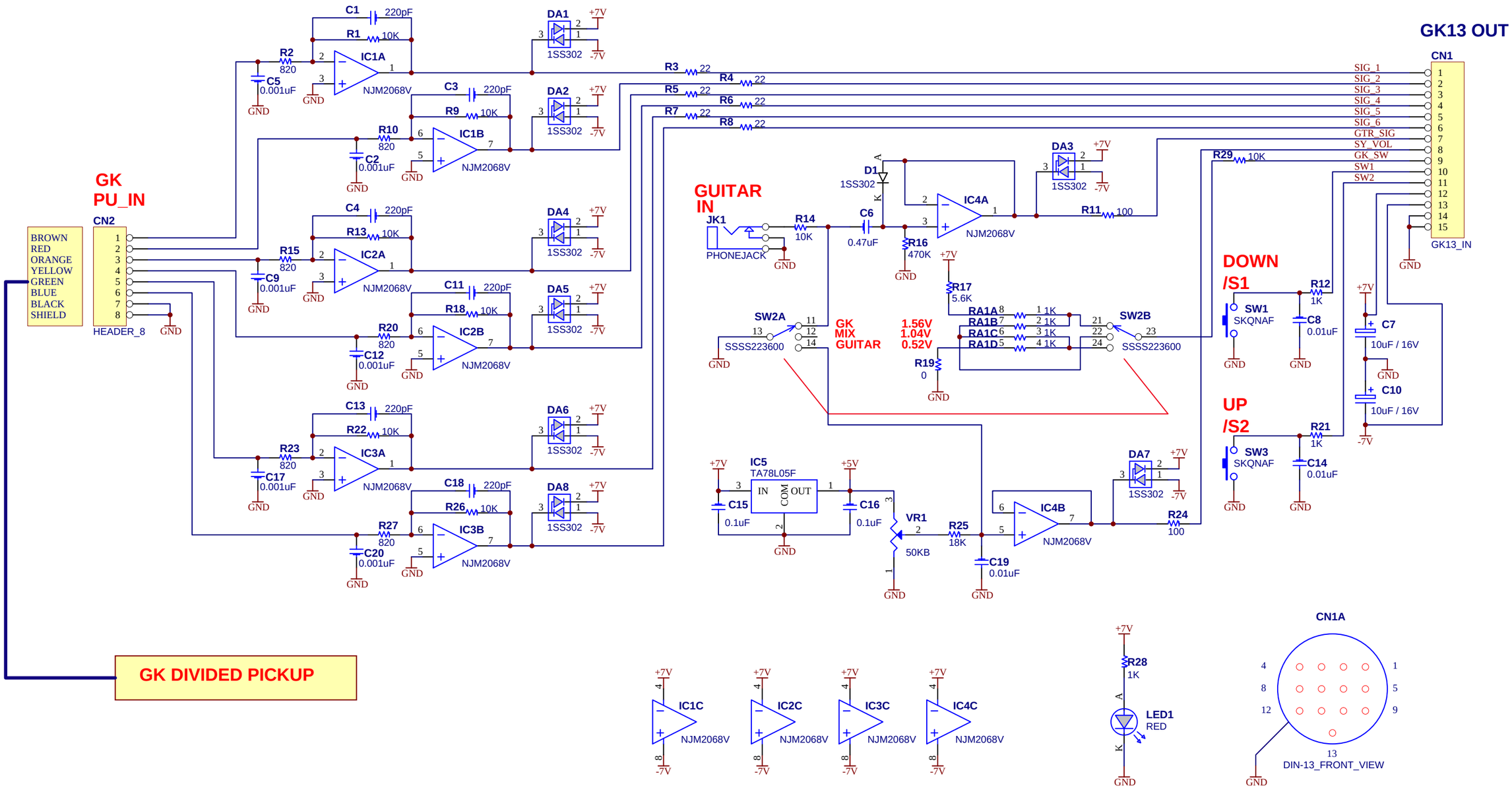

Checked:	Date:	GK-3	
Engr:	Date:	Size: B Drawing Number:	Revision: A
		Time: 12:47:58	Sheet 1 of 1
File: Z:\Design\RM_MagicBox_110615.Ddb - Documents\GK-3.sch			