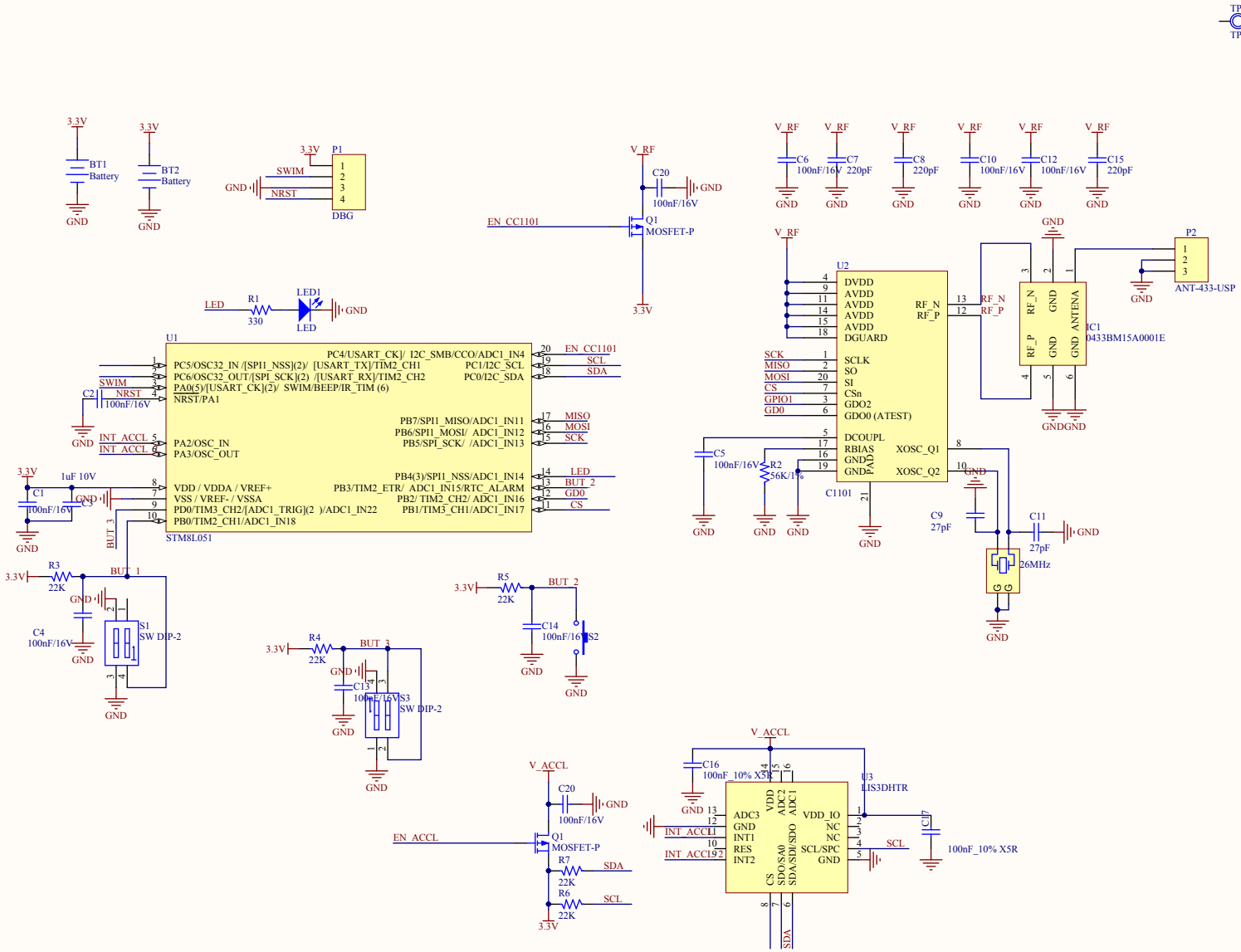

Title		
Size A3	Number	Revision
Date: 16/01/2016	Sheet of	
File: D:\IKY\..\Remote_CC1101_3_BUTTOM.SchDoc	Drawn By:	

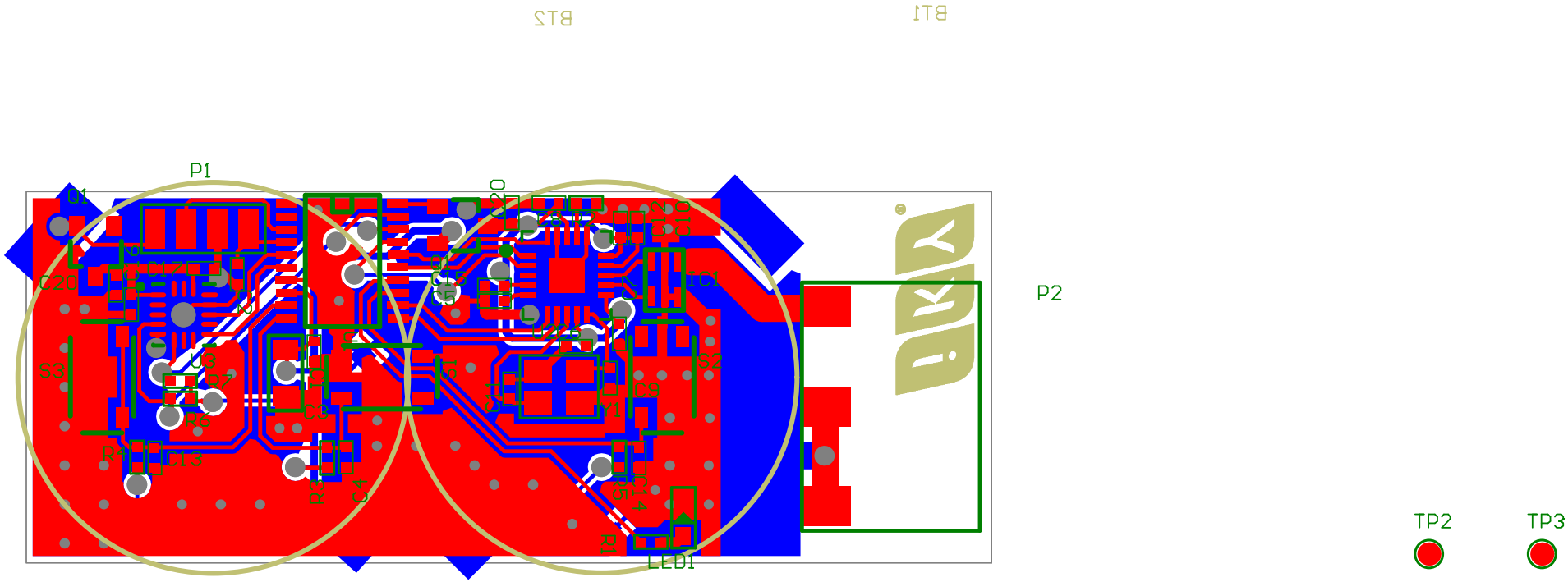
BT2
BT1
P1
P2
TP2
TP3
LED1
IC1
S2
S3
C20
C9
R7
R6
R4
C13
Y1