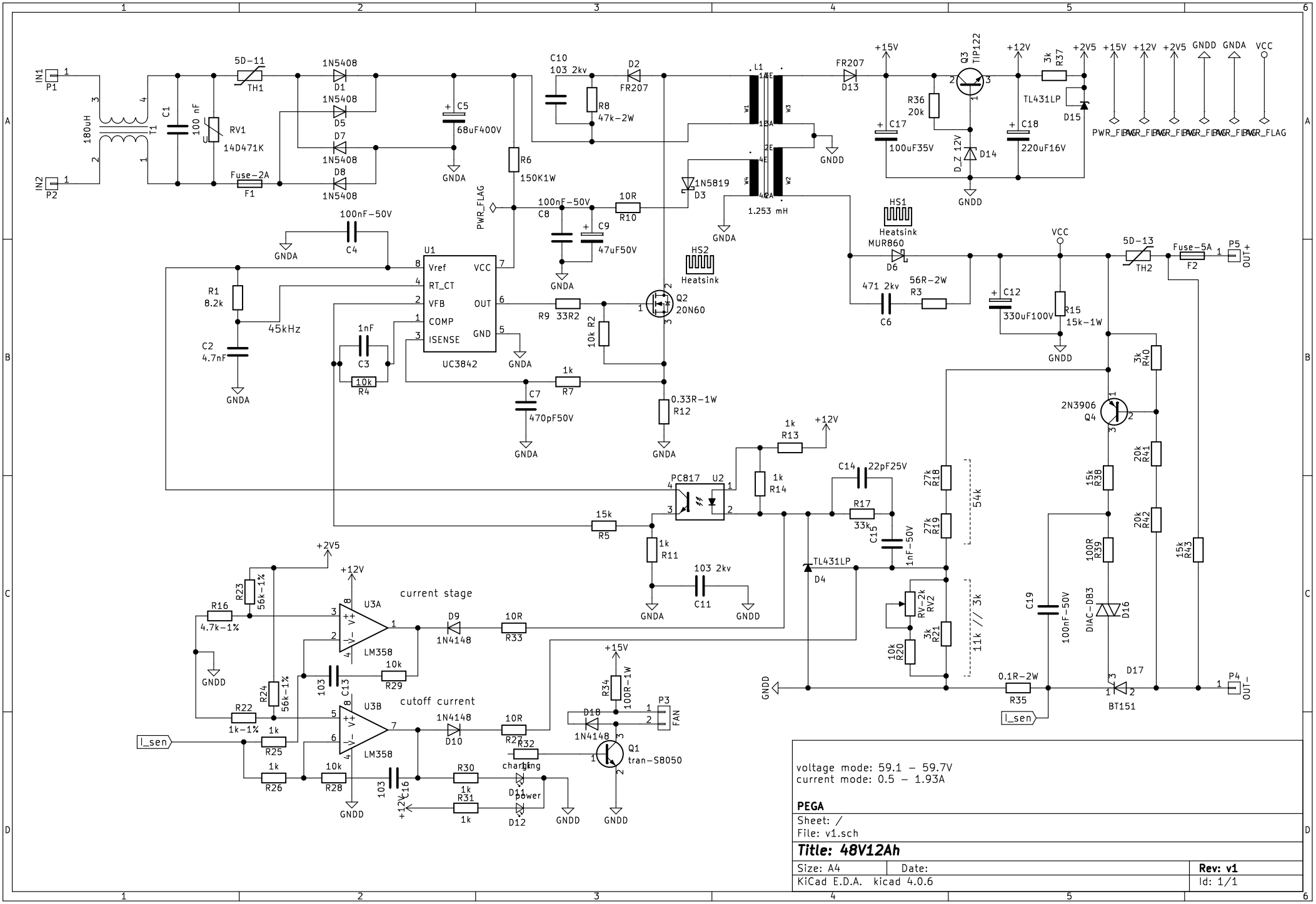
IN1
P1
IN2
P2
180uH
T1
C1
100 nF
RV1
14D471K
5D-11
TH1
Fuse-2A
F1
1N5408
D1
D5
D7
D8
C5
68uF400V
GNDA
R6
150K1W
PWR_FLAG
C10
103 2kv
R8
47k-2W
D2
FR207
C8
100nF-50V
R10
10R
C9
47uF50V
1N5819
D3
HS2
Heatsink
Q2
20N60
R9
33R2
R2
10k
R12
0.33R-1W
U1
UC3842
Vref
RT_CT
VFB
COMP
ISENSE
VCC
OUT
GND
C4
R1
8.2k
45kHz
C2
4.7nF
C3
1nF
R4
10k
C7
470pF50V
R7
1k
L1
W1
W2
W3
W4
1.253 mH
GNDD
FR207
D13
+15V
C17
100uF35V
R36
20k
D_Z 12V
D14
Q3
TIP122
+12V
C18
220uF16V
3k
R37
TL431LP
D15
+2V5
PWR_FLAG
HS1
Heatsink
MUR860
D6
471 2kv
C6
56R-2W
R3
C12
330uF100V
R15
15k-1W
VCC
5D-13
TH2
Fuse-5A
F2
P5
OUT+
R13
1k
R14
1k
PC817
U2
R5
15k
R11
1k
C11
103 2kv
C14
22pF25V
R17
33k
C15
1nF-50V
TL431LP
D4
27k
R18
27k
R19
54k
RV-2k
RV2
3k
R21
10k
R20
11k // 3k
C19
100nF-50V
0.1R-2W
R35
l_sen
2N3906
Q4
3k
R40
20k
R41
15k
R38
20k
R42
100R
R39
DIAC-DB3
D16
15k
R43
D17
BT151
P4
OUT-
current stage
U3A
LM358
R16
4.7k-1%
R23
56k-1%
R24
56k-1%
D9
1N4148
10R
R33
10k
R29
103
C13
cutoff current
U3B
LM358
R22
1k-1%
R25
1k
D10
1N4148
10R
R27
R32
charging
power
D11
D12
R26
1k
R28
10k
R30
1k
R31
1k
103
C16
+12V
R34
100R-1W
D18
1N4148
P3
FAN
Q1
tran-S8050
l_sen
voltage mode: 59.1 – 59.7V
current mode: 0.5 – 1.93A
PEGA
Sheet: /
File: v1.sch
Title: 48V12Ah
Size: A4
Date:
Rev: v1
KiCad E.D.A. kicad 4.0.6
Id: 1/1