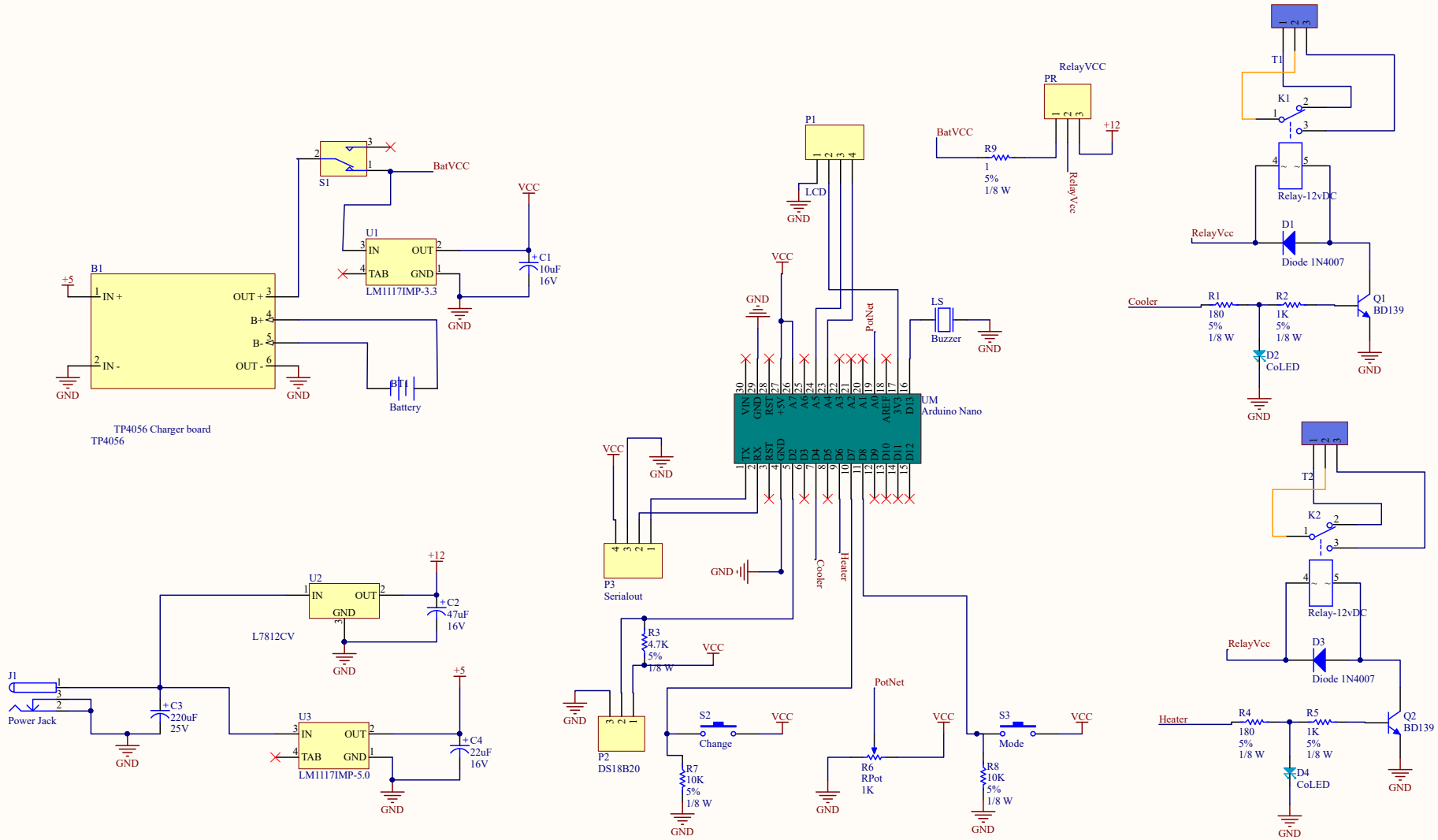

Title		
Size Legal	Number	Revision
Date: 1/27/2022	Sheet of	
File: E:\Projects\..\chematic.SchDoc	Drawn By:	