MCU

File: mcu.kicad_sch

RF

File: rf.kicad_sch

GPS

File: gps.kicad_sch

IO_CONN

File: io_conn.kicad_sch

OCP

File: ocp.kicad_sch

Antenna Deployment

File: antenna_deploy.kicad_sch

Primer Parcial
Introducción a la Ingeniería Satelital
Sanie Peralta, Alejandro Campo

Sheet: /
File: pcb_comms_board.kicad_sch

Title: PC1: APRS & GPS

Size: A4	Date: 2026-04-01	**Rev: 1.0**
KiCad E.D.A. 9.0.7		Id: 1/7

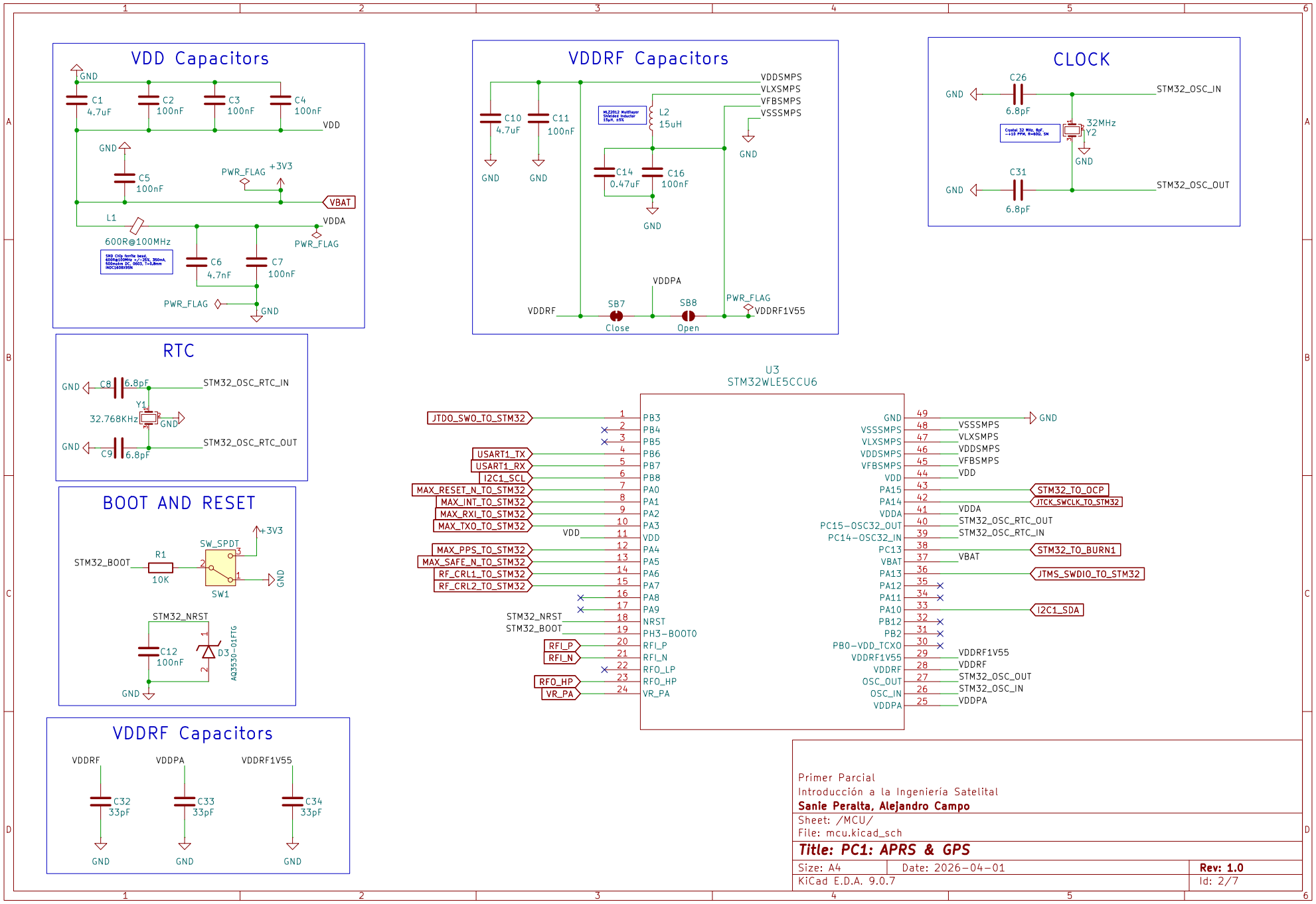

Primer Parcial
Introducción a la Ingeniería Satelital
Sanie Peralta, Alejandro Campo
Sheet: /MCU/
File: mcu.kicad_sch

Title: PC1: APRS & GPS

Size: A4	Date: 2026-04-01	**Rev: 1.0**
KiCad E.D.A. 9.0.7		Id: 2/7

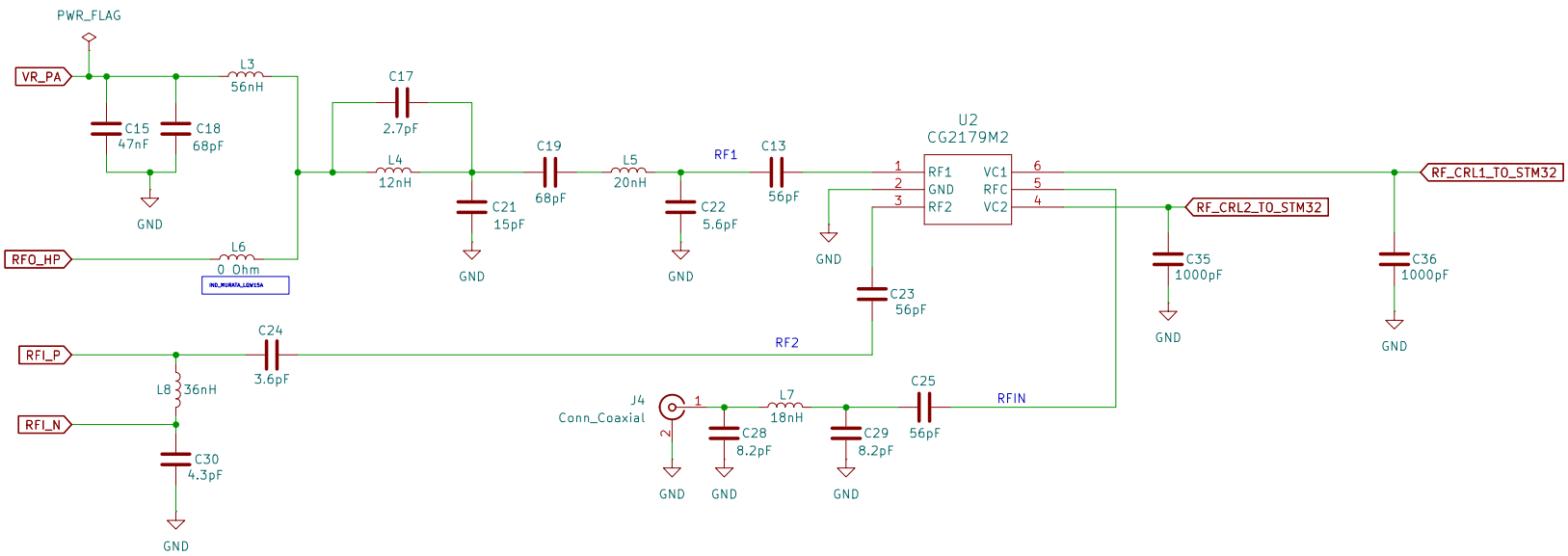

Primer Parcial
Introducción a la Ingeniería Satelital
Sanie Peralta, Alejandro Campo

Sheet: /RF/
File: rf.kicad_sch

Title: PC1: APRS & GPS

Size: A4	Date: 2026-04-01	**Rev: 1.0**
KiCad E.D.A. 9.0.7		Id: 3/7

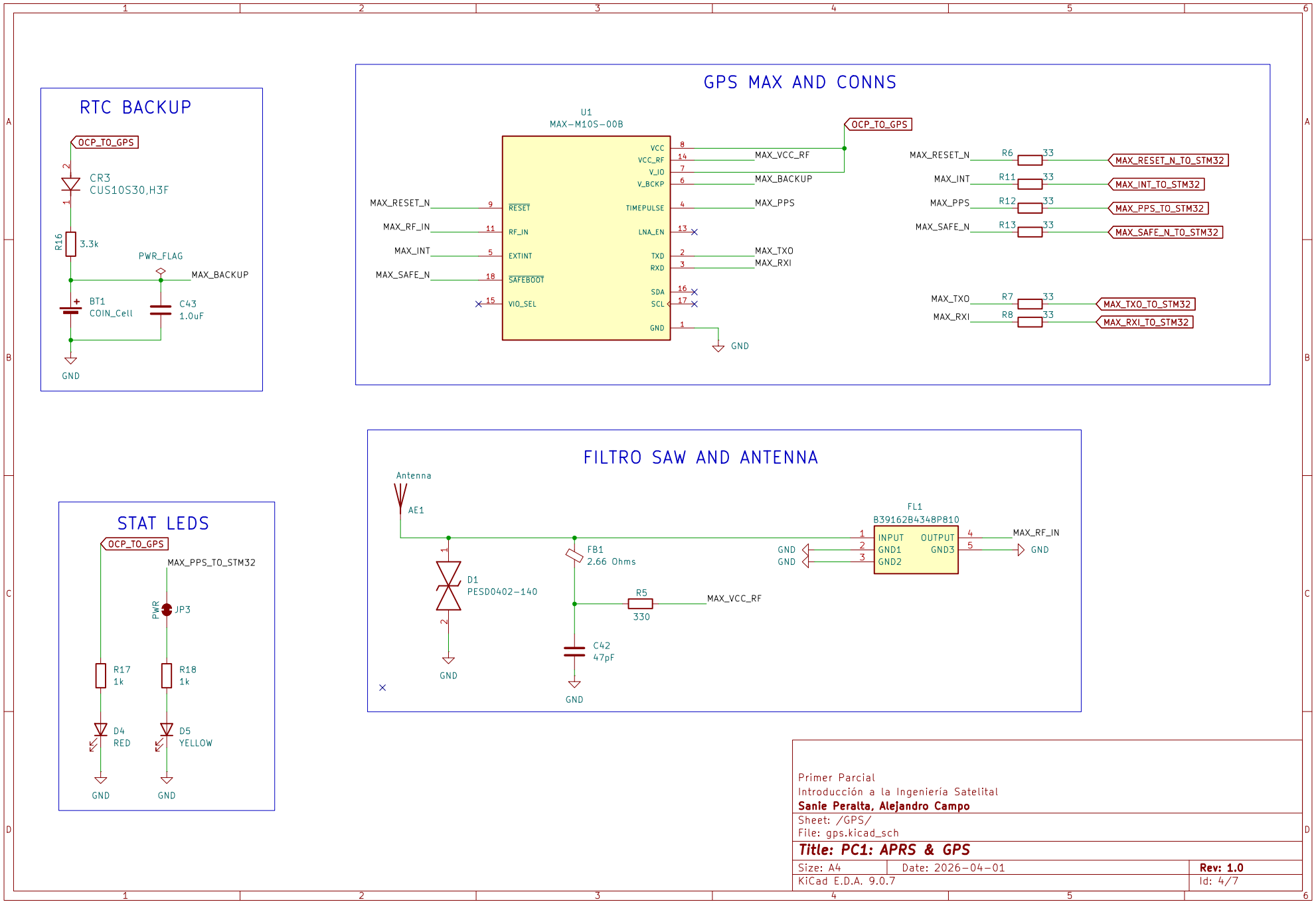
RTC BACKUP
OCP_TO_GPS
CR3
CUS10S30,H3F
R16
3.3k
PWR_FLAG
MAX_BACKUP
BT1
COIN_Cell
C43
1.0uF
GND
GPS MAX AND CONNS
U1
MAX-M10S-00B
VCC
VCC_RF
V_IO
V_BCKP
RESET
RF_IN
EXTINT
SAFEBOOT
VIO_SEL
TIMEPULSE
LNA_EN
TXD
RXD
SDA
SCL
GND
MAX_RESET_N
MAX_RF_IN
MAX_INT
MAX_SAFE_N
MAX_VCC_RF
MAX_BACKUP
MAX_PPS
MAX_TXO
MAX_RXI
R6
R11
R12
R13
R7
R8
33
MAX_RESET_N_TO_STM32
MAX_INT_TO_STM32
MAX_PPS_TO_STM32
MAX_SAFE_N_TO_STM32
MAX_TXO_TO_STM32
MAX_RXI_TO_STM32
FILTRO SAW AND ANTENNA
Antenna
AE1
FL1
B39162B4348P810
INPUT
GND1
GND2
OUTPUT
GND3
MAX_RF_IN
D1
PESD0402-140
FB1
2.66 Ohms
R5
330
C42
47pF
STAT LEDS
MAX_PPS_TO_STM32
PWR
JP3
R17
1k
R18
1k
D4
RED
D5
YELLOW
Primer Parcial
Introducción a la Ingeniería Satelital
Sanie Peralta, Alejandro Campo
Sheet: /GPS/
File: gps.kicad_sch
Title: PC1: APRS & GPS
Size: A4
Date: 2026-04-01
Rev: 1.0
KiCad E.D.A. 9.0.7
Id: 4/7

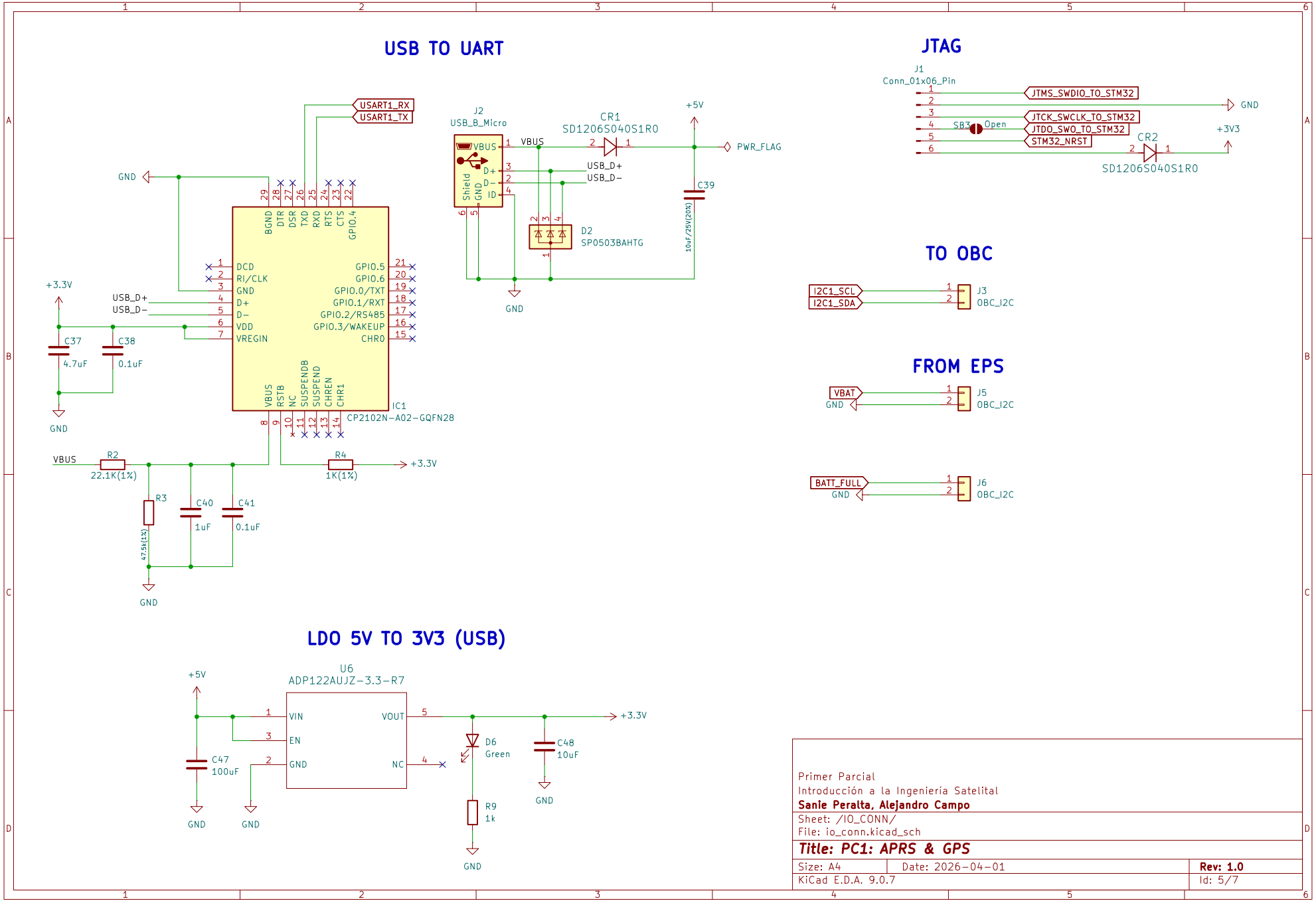
USB TO UART
USART1_RX
USART1_TX
GND
+3.3V
USB_D+
USB_D−
C37
4.7uF
C38
0.1uF
IC1
CP2102N−A02−GQFN28
DCD
RI/CLK
GND
D+
D−
VDD
VREGIN
GPIO.5
GPIO.6
GPIO.0/TXT
GPIO.1/RXT
GPIO.2/RS485
GPIO.3/WAKEUP
CHR0
BGND
DTR
DSR
TXD
RXD
RTS
CTS
GPIO.4
VBUS
RSTB
NC
SUSPENDB
SUSPEND
CHREN
CHR1
VBUS
R2
22.1K(1%)
R3
47.5k(1%)
C40
1uF
C41
0.1uF
R4
1K(1%)
+3.3V
J2
USB_B_Micro
VBUS
D+
D−
ID
Shield
GND
CR1
SD1206S040S1R0
+5V
PWR_FLAG
C39
10uF/25V(20%)
D2
SP0503BAHTG
JTAG
J1
Conn_01x06_Pin
JTMS_SWDIO_TO_STM32
JTCK_SWCLK_TO_STM32
JTDO_SWO_TO_STM32
STM32_NRST
SB3
Open
CR2
SD1206S040S1R0
+3V3
TO OBC
I2C1_SCL
I2C1_SDA
J3
OBC_I2C
FROM EPS
VBAT
J5
OBC_I2C
BATT_FULL
J6
OBC_I2C
LDO 5V TO 3V3 (USB)
U6
ADP122AUJZ−3.3−R7
VIN
EN
GND
VOUT
NC
C47
100uF
D6
Green
R9
1k
C48
10uF
Primer Parcial
Introducción a la Ingeniería Satelital
Sanie Peralta, Alejandro Campo
Sheet: /IO_CONN/
File: io_conn.kicad_sch
Title: PC1: APRS & GPS
Size: A4
Date: 2026−04−01
Rev: 1.0
KiCad E.D.A. 9.0.7
Id: 5/7

OCP

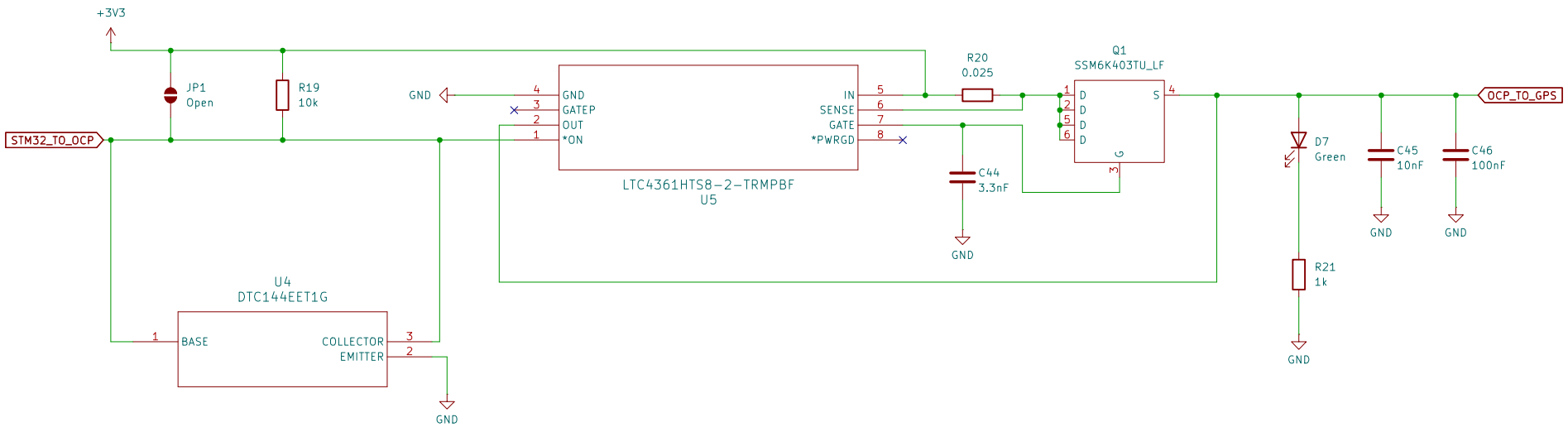

Primer Parcial
Introducción a la Ingeniería Satelital
Sanie Peralta, Alejandro Campo

Sheet: /OCP/
File: ocp.kicad_sch

Title: PC1: APRS & GPS

Size: A4	Date: 2026-04-01	**Rev: 1.0**
KiCad E.D.A. 9.0.7		Id: 6/7

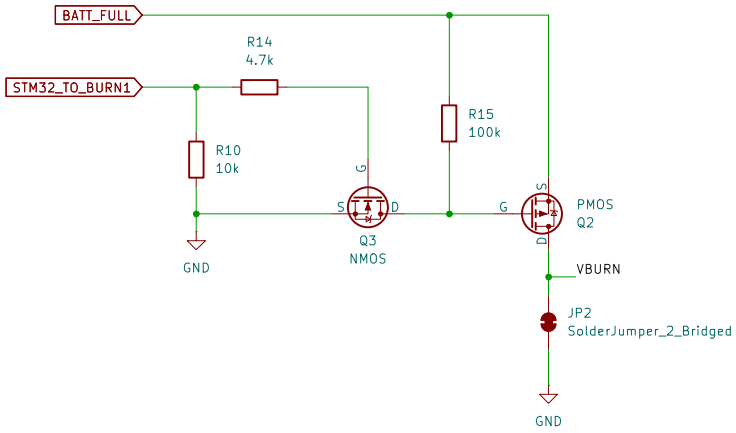

Primer Parcial
Introducción a la Ingeniería Satelital
Sanie Peralta, Alejandro Campo

Sheet: /Antenna Deployment/
File: antenna_deploy.kicad_sch

Title: PC1: APRS & GPS

Size: A4	Date: 2026-04-01	**Rev: 1.0**
KiCad E.D.A. 9.0.7		Id: 7/7