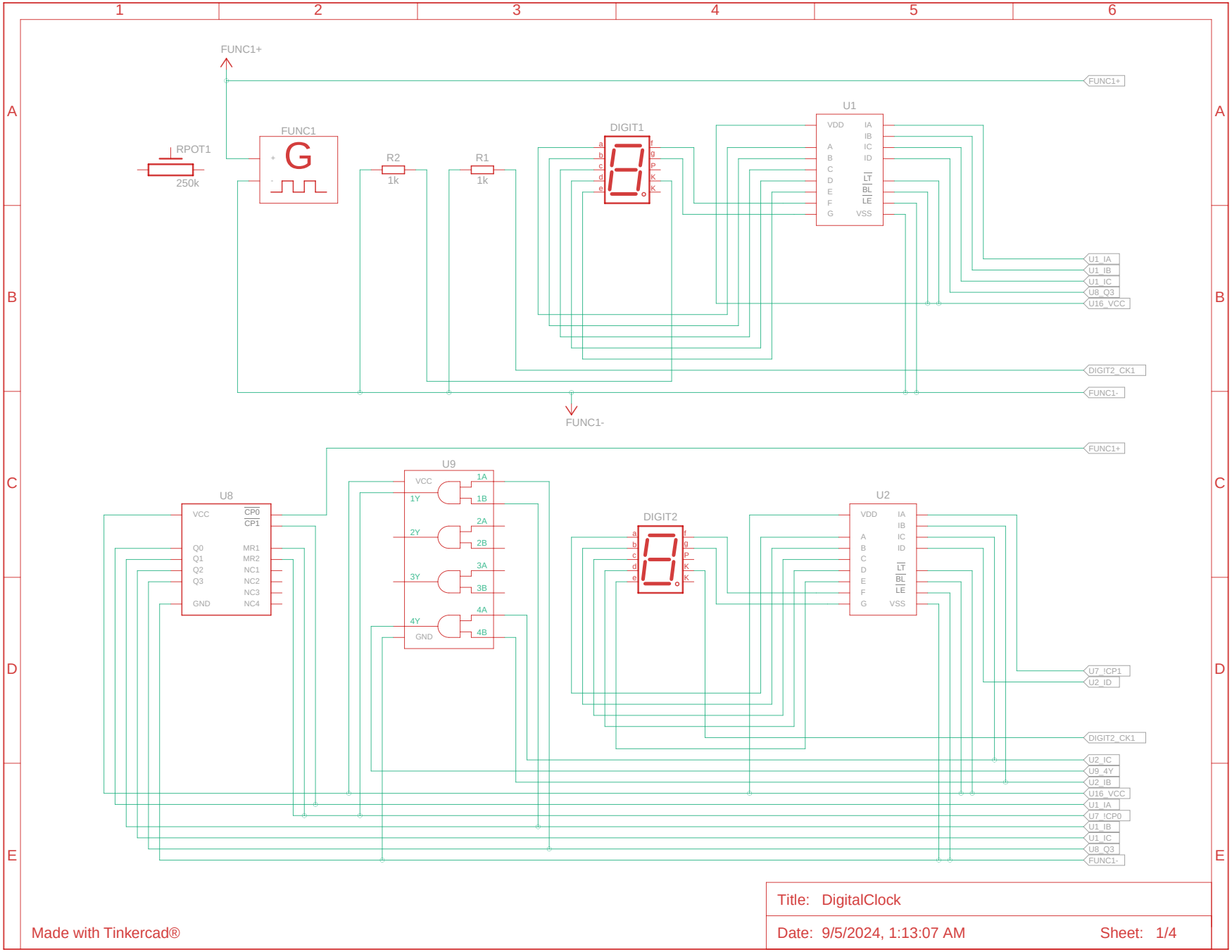

Made with Tinkercad®

Title: DigitalClock

Date: 9/5/2024, 1:13:07 AM

Sheet: 1/4

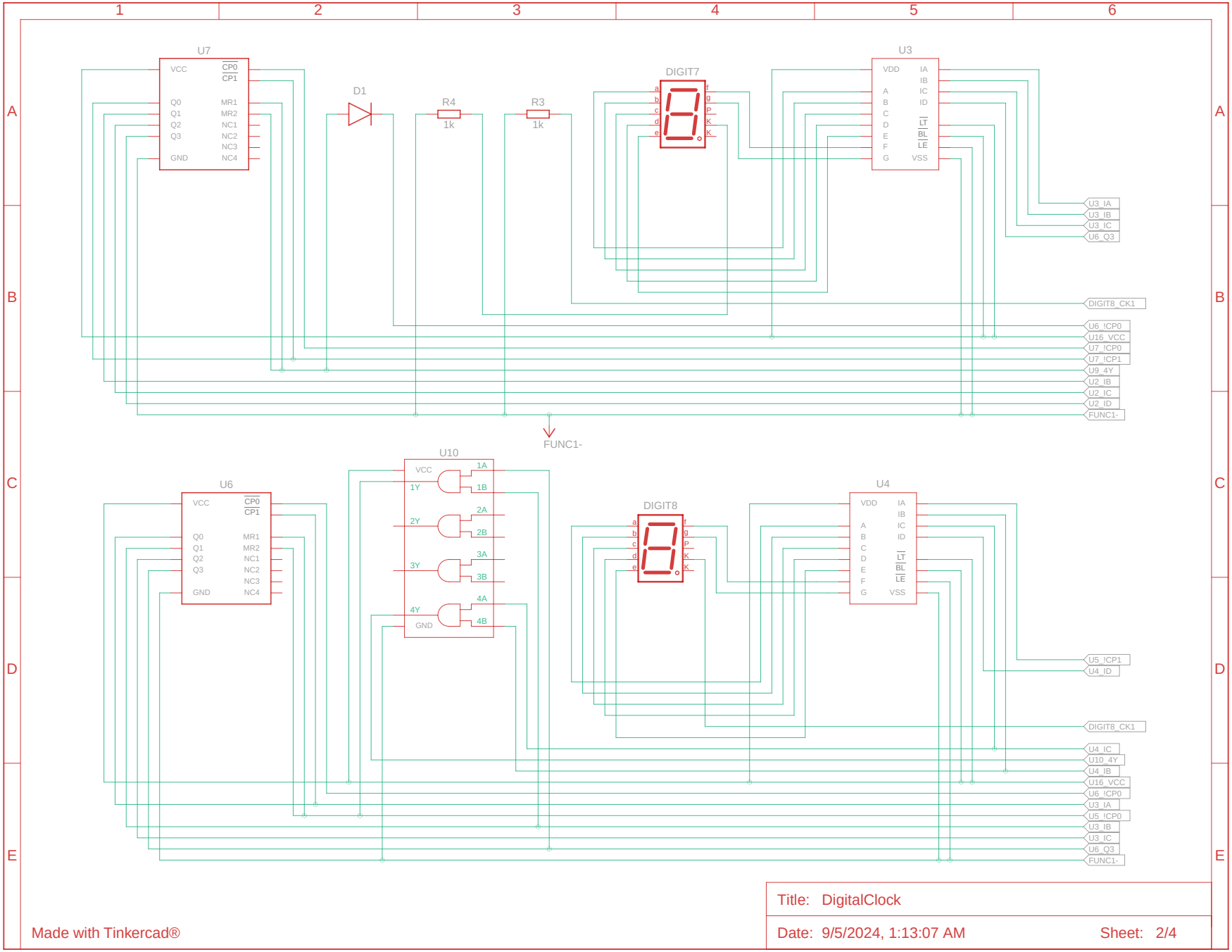

Made with Tinkercad®

Title: DigitalClock

Date: 9/5/2024, 1:13:07 AM

Sheet: 2/4

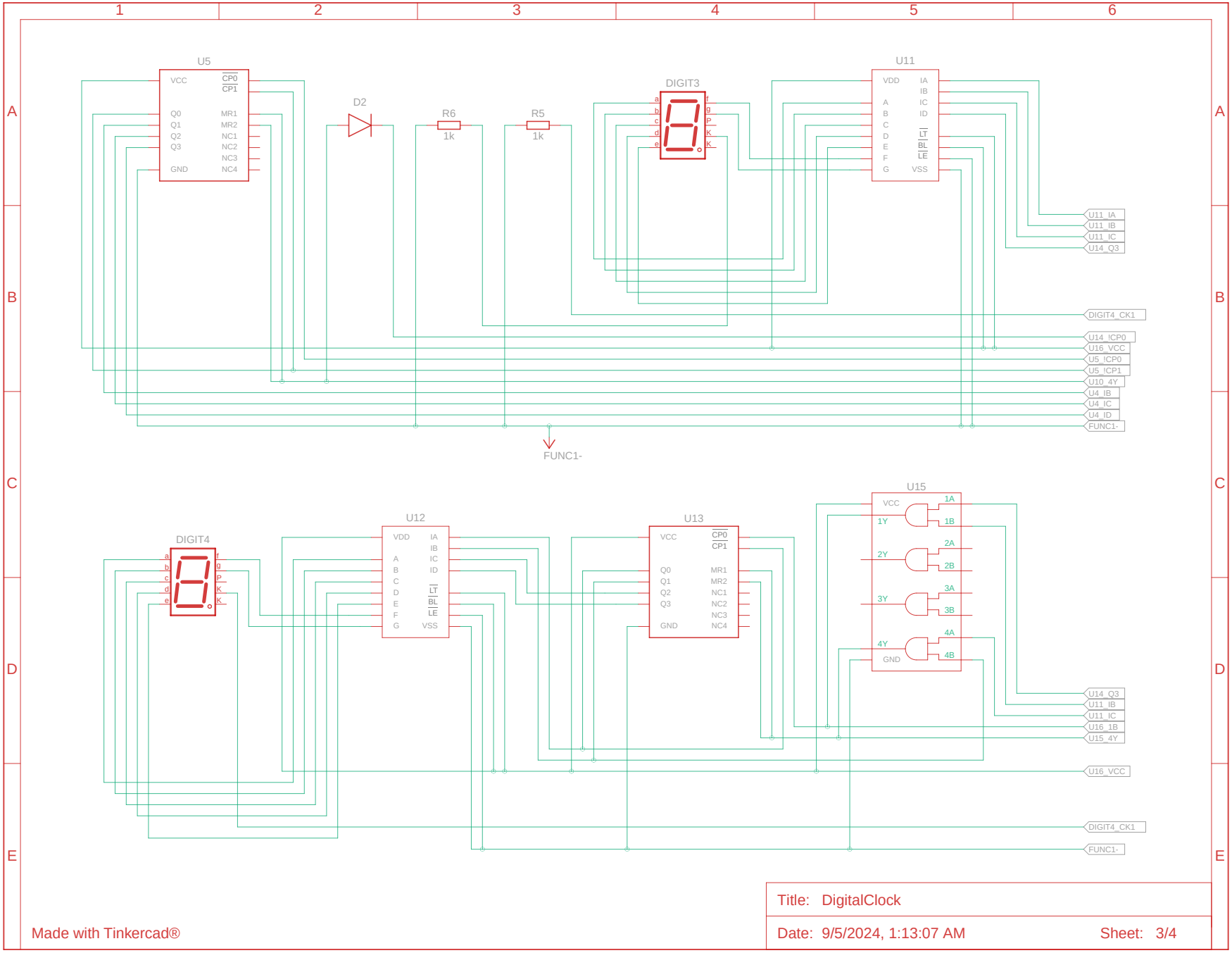

Made with Tinkercad®

Title: DigitalClock

Date: 9/5/2024, 1:13:07 AM

Sheet: 3/4

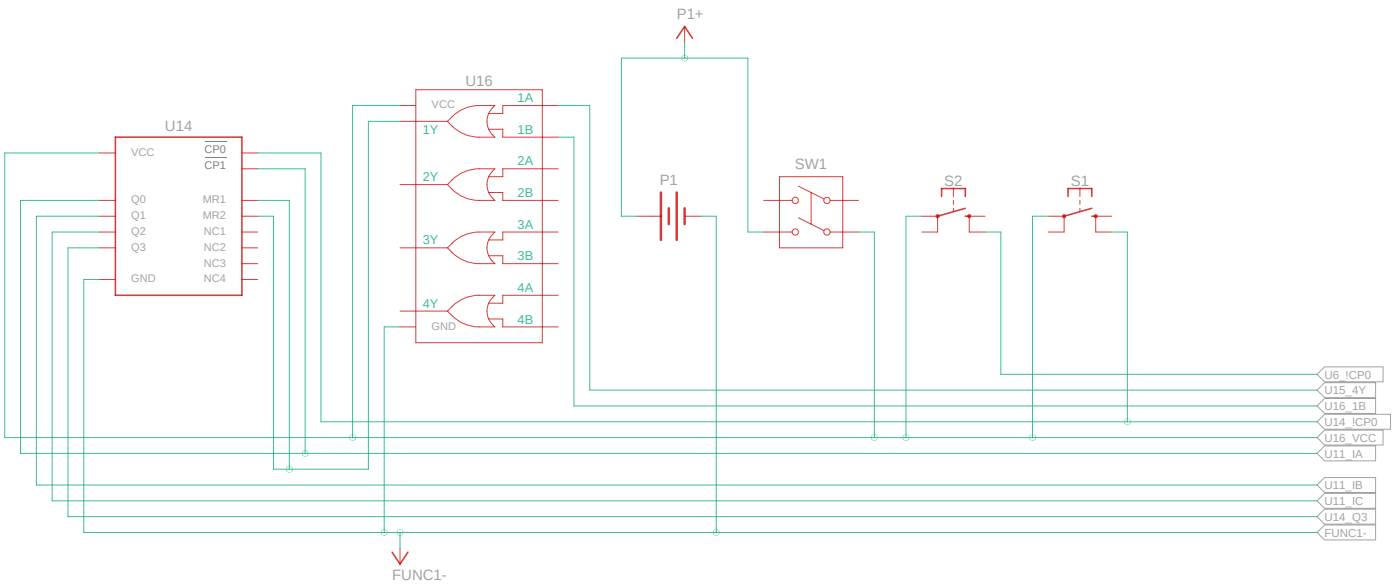

Made with Tinkercad®

Title: DigitalClock

Date: 9/5/2024, 1:13:07 AM

Sheet: 4/4