Unit - II
2.4 Mesh Analysis Problems

Dr.Santhosh.T.K.

Syllabus

UNIT – II **14 Periods**

DC Circuit Analysis: Voltage source and current sources, ideal and practical, Kirchhoff's laws and applications to network solutions using mesh analysis, - Simplifications of networks using series- parallel, Star/Delta transformation, DC circuits-Current-voltage relations of electric network by mathematical equations to analyse the network (Superposition theorem, Thevenin's theorem, Maximum Power Transfer theorem), Transient analysis of R-L, R-C and R-L-C Circuits.

AC Steady-state Analysis: AC waveform definitions - Form factor - Peak factor - study of R-L - R-C -RLC series circuit - R-L-C parallel circuit - phasor representation in polar and rectangular form - concept of impedance - admittance - active - reactive - apparent and complex power - power factor, Resonance in R-L-C circuits - 3 phase balanced AC Circuits

Steps of Mesh Analysis

1. Identify mesh (loops).
2. Assign a current to each mesh. → clockwise
3. Apply KVL around each loop to get an equation in terms of the loop currents.

   V = IR → Resistors → drop
4. **Solve the resulting system of linear equations for the mesh/loop currents.**

3. KVL Around Mesh 1

$+V_1 - I_1\,(1k) - (I_1 - I_2)\,1k = 0$

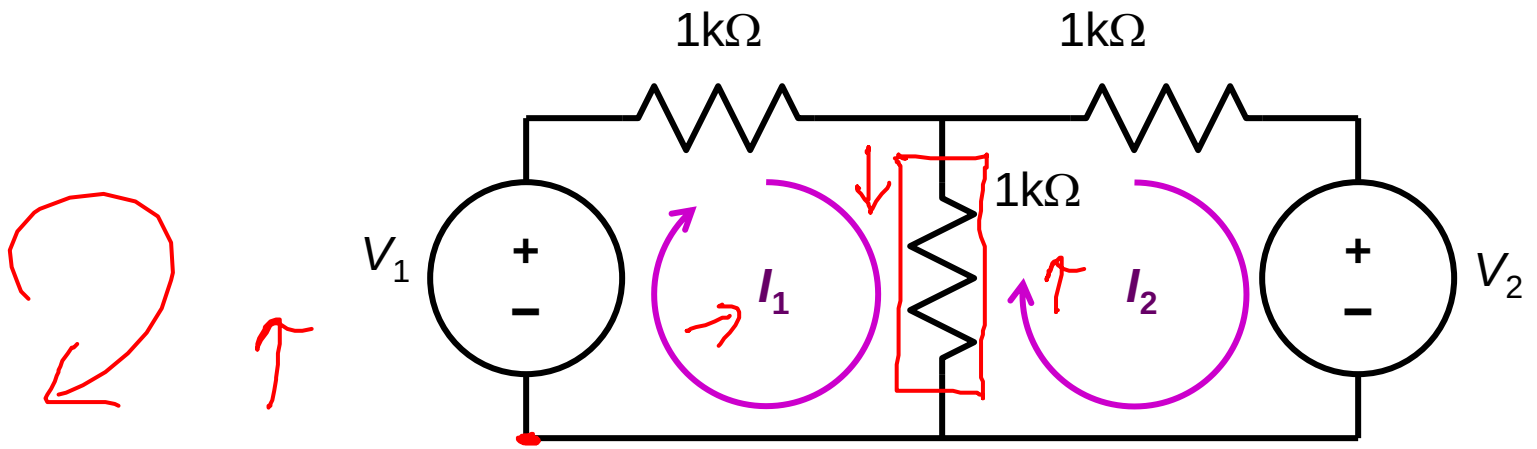

I_1 I_2

$(I_1 + I_2)$

$$+V_1 - I_1\,1k\Omega - (I_1 - I_2)\,1k\Omega = 0$$

$$I_1\,1k\Omega + (I_1 - I_2)\,1k\Omega = V_1$$

$$I_1\,2k\Omega - I_2\,1k\Omega = V_1$$

3. KVL Around Mesh 2

$V = I\,R$

$-I_2(1k) - V_2 - 1k(I_2 - I_1) = 0$

$V_1 = 7V$

$V_2 = 4V$

I_1 & I_2

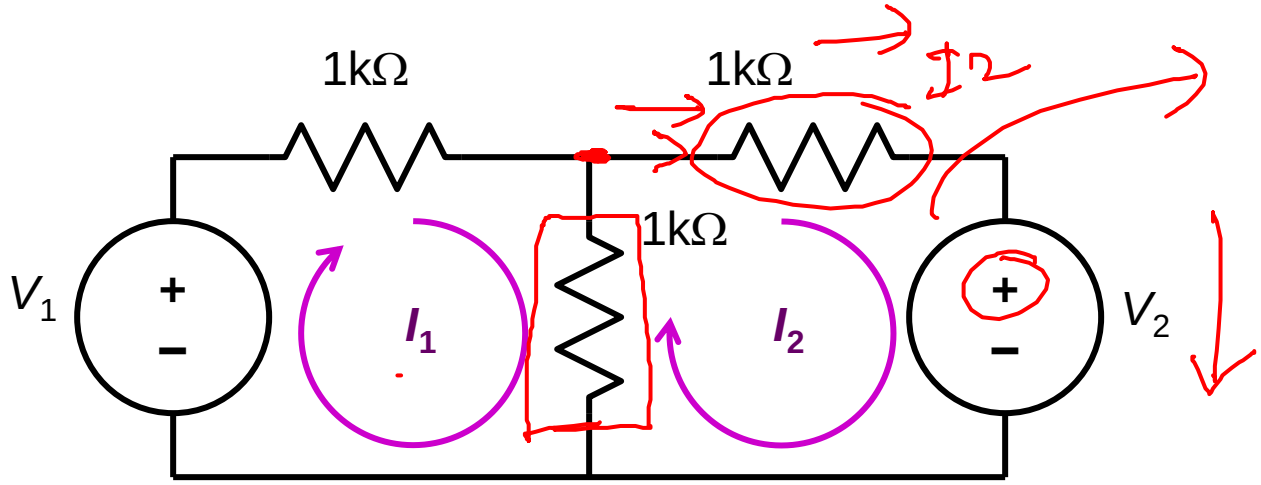

$$-(I_2 - I_1)\,1k\Omega - I_2\,1k\Omega - V_2 = 0$$

$$(I_2 - I_1)\,1k\Omega + I_2\,1k\Omega = -V_2$$

$$-I_1\,1k\Omega + I_2\,2k\Omega = -V_2 \quad (2)$$

$$I_1(2k) - I_2(1k) = V_1 \quad (1)$$

4. Solving the Equations

Let: $V_1 = 7V$ and $V_2 = 4V$

Results:

$$I_1 = 3.33 \text{ mA}$$

$$I_2 = -0.33 \text{ mA}$$

Finally

$$V_{out} = (I_1 - I_2)\ 1k\Omega = 3.66V$$

Matrix Notation

- The two equations can be combined into a single matrix/vector equation

$I_2 - I_1$

$I_1 - I_2$

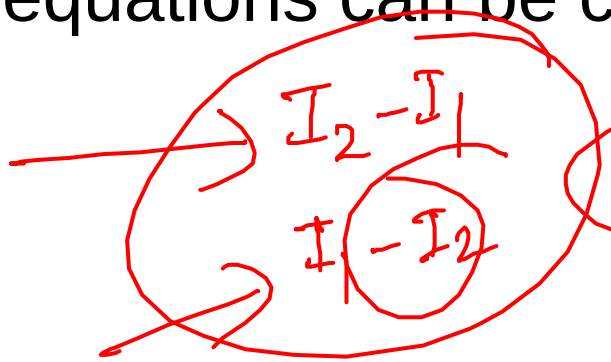

$I_1\ 2\text{k}\Omega - I_2\ 1\text{k}\Omega = V_1$

$-I_1\ 1\text{k}\Omega + I_2\ 2\text{k}\Omega = -V_2$

Resistance matrix

+ve

$$\begin{bmatrix} 1\text{k}\Omega + 1\text{k}\Omega & -1\text{k}\Omega \\ -1\text{k}\Omega & 1\text{k}\Omega + 1\text{k}\Omega \end{bmatrix} \begin{bmatrix} I_1 \\ I_2 \end{bmatrix} = \begin{bmatrix} V_1 \\ -V_2 \end{bmatrix}$$

-ve R I = V

Inspection Method

a_{11} → Sum of resistances in mesh 1

a_{22} → Sum of resistances in mesh 2.

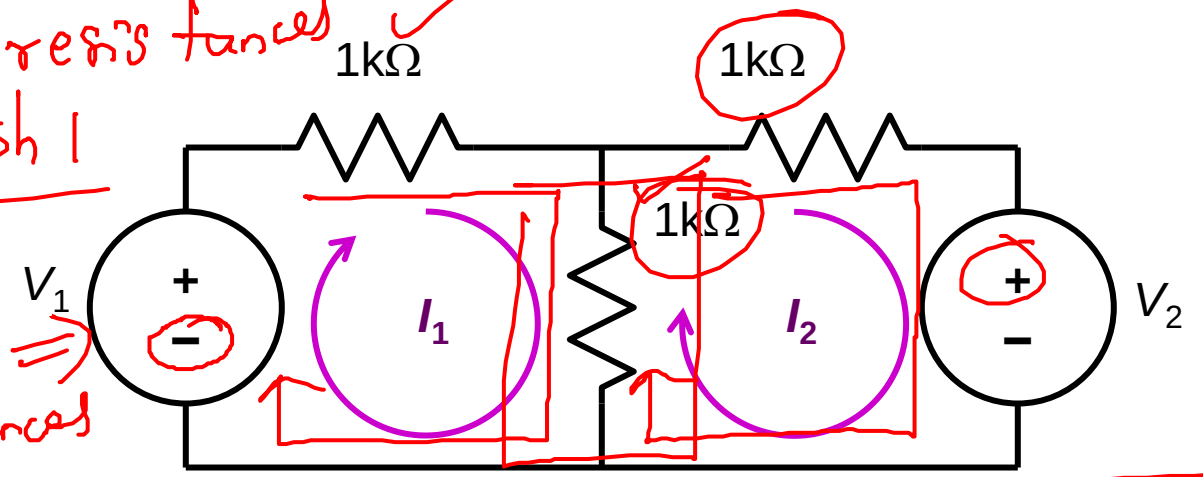

a_{12} → $-1k$ = a_{21}

$$\begin{bmatrix} 1\text{k}\Omega + 1\text{k}\Omega & -1\text{k}\Omega \\ -1\text{k}\Omega & 1\text{k}\Omega + 1\text{k}\Omega \end{bmatrix} \begin{bmatrix} I_1 \\ I_2 \end{bmatrix} = \begin{bmatrix} +V_1 \\ -V_2 \end{bmatrix}$$

(a_{11}, a_{12}, a_{21}, a_{22})

Practice Problem

Determine the power dissipation in the 4Ω resistor of the given network.

① 3 mesh

② I_1, I_2, I_3

③ KVL → Inspection.

$$\begin{bmatrix} 8 & -3 & 0 \\ -3 & 9 & -4 \\ 0 & -4 & 10 \end{bmatrix} \begin{bmatrix} I_1 \\ I_2 \\ I_3 \end{bmatrix} = \begin{bmatrix} +60 \\ 0 \\ -20 \end{bmatrix}$$

R I V

$a_{11} = 5+3 = 8$

$a_{22} = 3+4+2 = 9$

$a_{23} = a_{32} =$

$a_{33} = 6+4 = 10$

$a_{12} = a_{21} = -3$

$a_{13} = a_{31} = 0$

Problem

Determine the power dissipation in the 4Ω resistor of the given network.

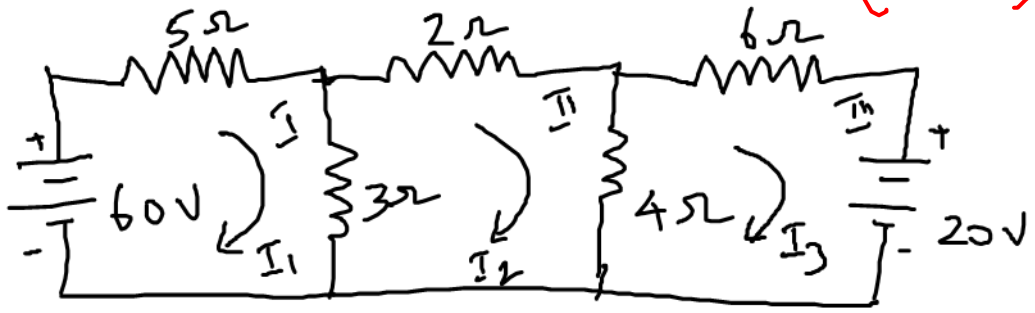

(Thrice) Mode
↓
EQN(1)
↓
3
↓

1
↓
a_{11} a_{12} a_{13} d_1
a_{21} a_{22} a_{23} d_2
a_{31} a_{32} a_{33} d_3
↓
= →

Cramer's rule
Calculator
Simultaneous eqn

$$\boxed{ax + by + cz = d}$$

Cramers

999MS

Mode
↓
Matrix
↓
Dimension (3&3)
↓
Enter Values

MAT A
↓
dim - 3
↓
a_{11} → All Values

Det(MAT A)

Cramer's rule

$$\Delta = |R| = \begin{vmatrix} a_{11} & a_{12} & a_{13} \\ a_{21} & a_{22} & a_{23} \\ a_{31} & a_{32} & a_{33} \end{vmatrix}$$

$\Delta I_1 =$

$\Delta I_2 =$

$\Delta I_3 =$

$$\Delta I_1 = \begin{vmatrix} V_1 & a_{12} & a_{13} \\ V_2 & a_{22} & a_{23} \\ V_3 & a_{32} & a_{33} \end{vmatrix}$$

$$\rightarrow I_1 = \frac{\Delta I_1}{\Delta}$$

$I_1 = 8.36\ A$

$I_2 = 2.31\ A$

$I_3 = -1.07\ A$

Problem

- Find the mesh current and determine the power supplied by each of the voltage source in the given circuit.

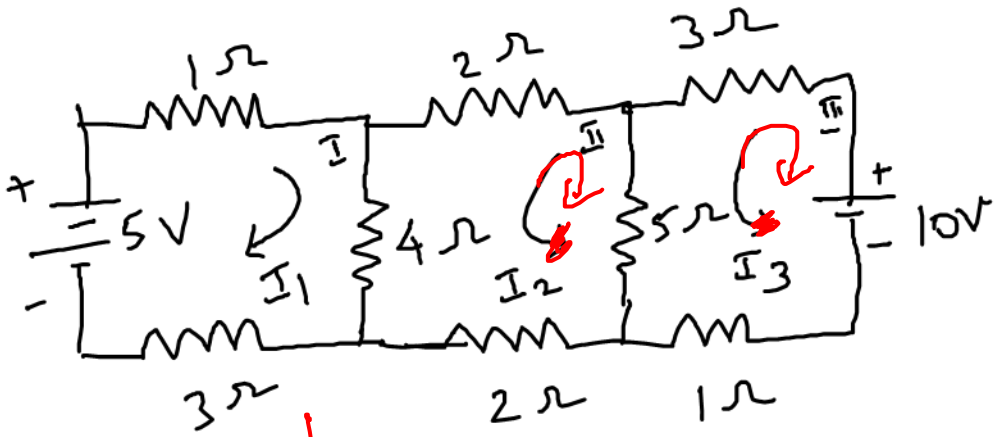

$$I_1 = 1.1\ A$$

$$I_2 = 0.97\ A$$

$$I_3 = 1.65\ A$$

$$\begin{bmatrix} 8 & -4 & 0 \\ -4 & 13 & -5 \\ 0 & -5 & 9 \end{bmatrix} \begin{bmatrix} I_1 \\ I_2 \\ I_3 \end{bmatrix} = \begin{bmatrix} +5 \\ 0 \\ -10 \end{bmatrix}$$

Problem

- Find the mesh current and determine the power supplied by each of the voltage source in the given circuit.

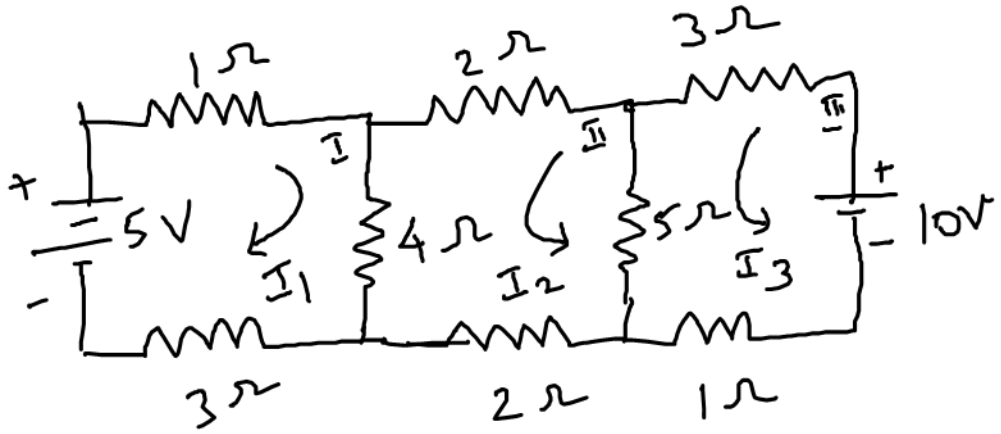

Exercise

- Find the mesh currents in the given network when the current through the branch BD is zero.

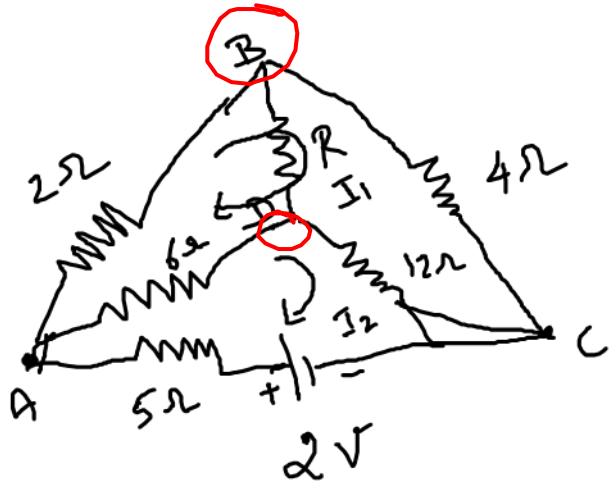

- Find the mesh currents in the given network when the current through the branch BD is zero.

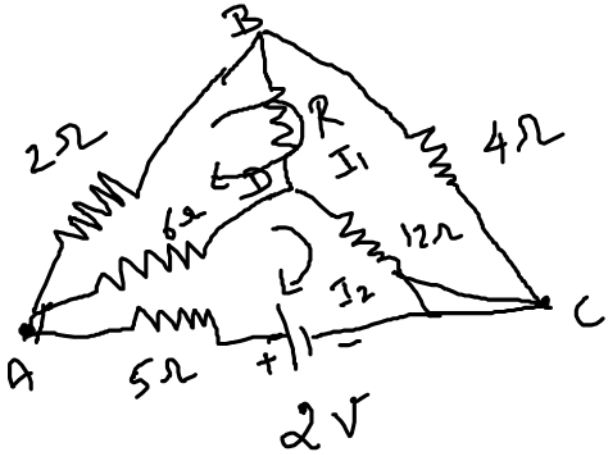

Cramer's Rule

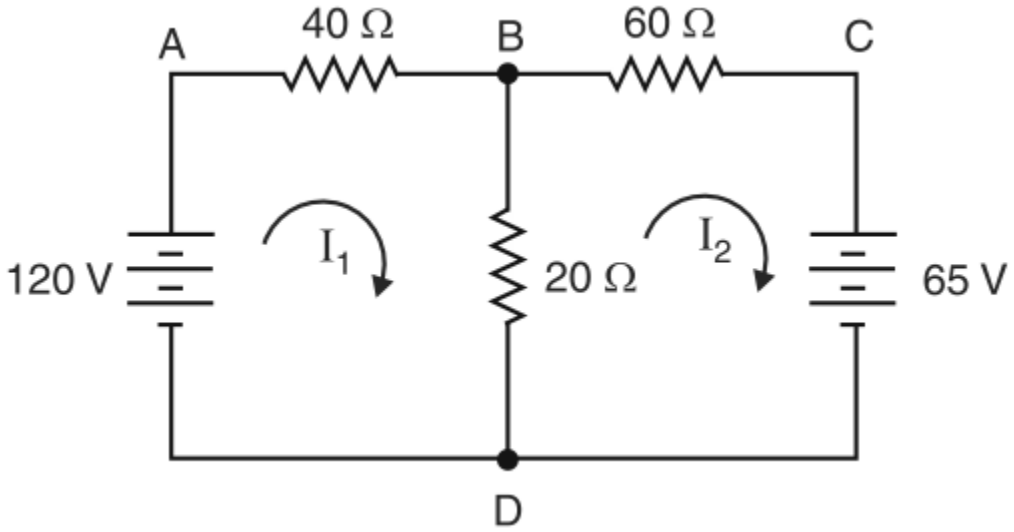

$$60I_1 - 20I_2 = 120$$
$$-20I_1 + 80I_2 = -65$$

$$I_1 = \frac{\begin{vmatrix} 120 & -20 \\ -65 & 80 \end{vmatrix}}{\begin{vmatrix} 60 & -20 \\ -20 & 80 \end{vmatrix}} = \frac{(120 \times 80) - (-65 \times -20)}{(60 \times 80) - (-20 \times -20)} = \frac{8300}{4400} = 1{\cdot}886\ \text{A}$$

$$I_2 = \frac{\begin{vmatrix} 60 & 120 \\ -20 & -65 \end{vmatrix}}{\text{Denominator}} = \frac{(60 \times -65) - (-20 \times 120)}{4400} = \frac{-1500}{4400} = -0{\cdot}341\ \text{A}$$

Advantages of Loop Analysis

- Solves directly for some currents
- Voltage sources are easy
- Current sources are either very easy or somewhat difficult
- Works best for circuits with few loops

Disadvantages of Loop Analysis

- Some currents must be computed from loop currents
- Does not work with non-planar circuits
- Choosing the supermesh may be difficult.

Summary

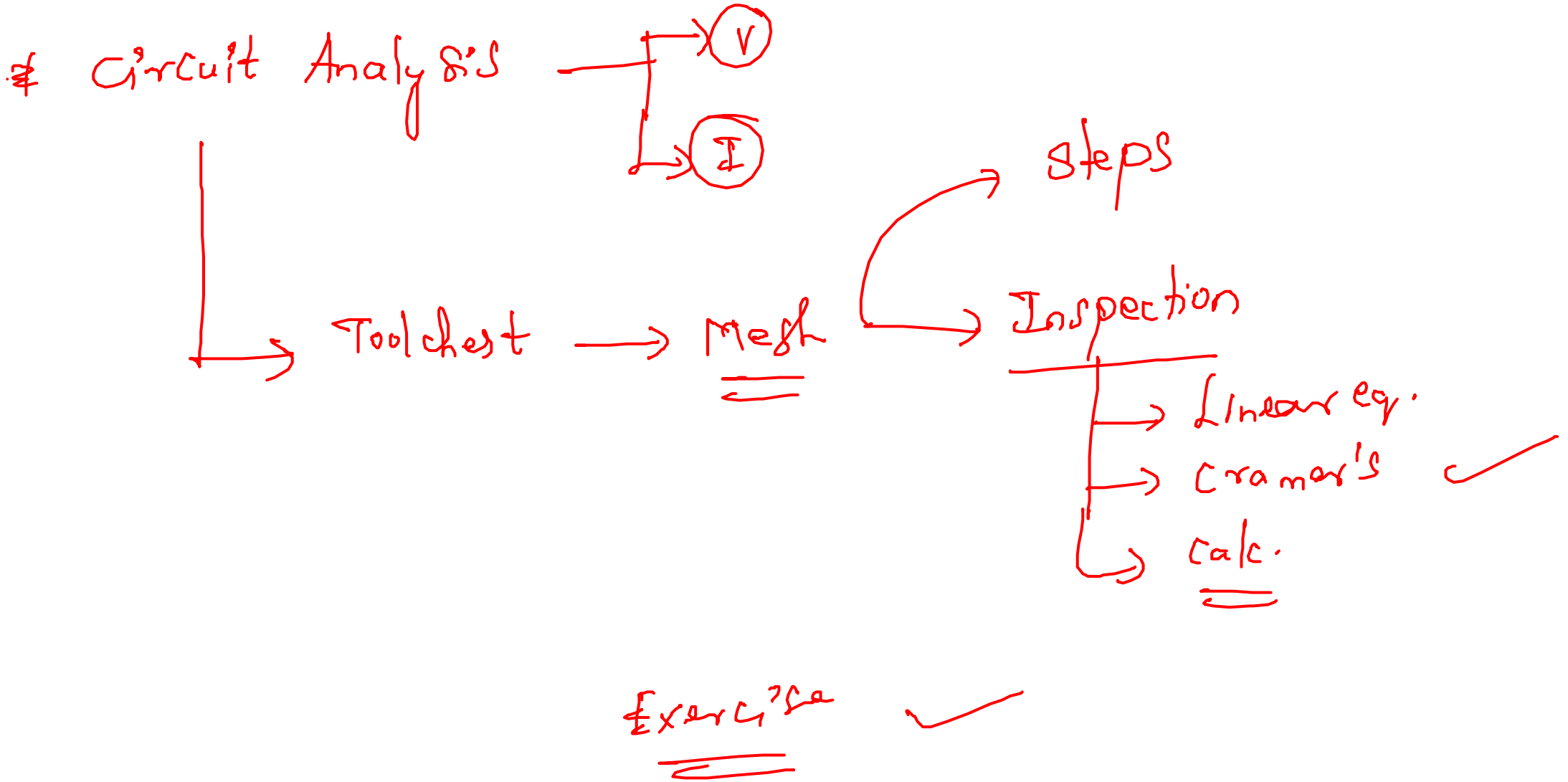
Circuit Analysis
V
I
Toolchest
Mesh
steps
Inspection
Linear eq.
Cramer's
Calc.
Exercise