Sheldon Manual
Lathes no longer
in production
9/6/80

SHELDON LATHES

S and M Series Lathes

Parts List

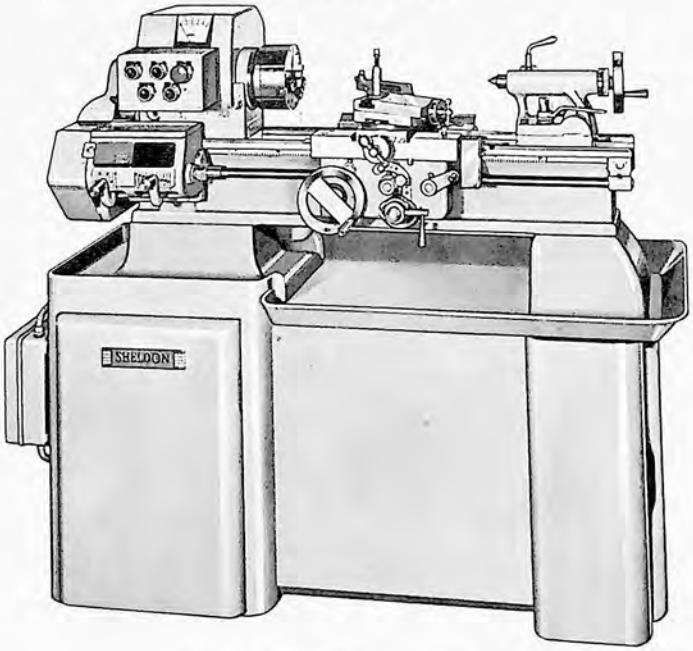

TABLE OF CONTENTS

Pg. 2 Headstock Assembly
Pg. 3 Tailstock Assembly
Pg. 4 End Gearing Assembly
Pg. 5 Reverse Plate Assembly
Pg. 6 Gear Box Assembly
Pg. 7 Bed and Pedestal Assembly
Pg. 8 Uncrating Instructions
Pg. 9 Leveling Instructions
Pg. 10 Oiling Instructions
Pg. 11 Replacing V-Belts
Pg. 12 Serial Number Location
Pg. 13 Metric Instructions
Pg. 14 Metric Attachment
Pg. 15 Hand lever Collett Attachment
Pg. 16 W-Drive Assembly
Pg. 18 U-Drive Assembly
Pg. 19 E-Drive Assembly
Pg. 20 Apron Assembly
Pg. 21 Compound Assembly
Pg. 22 Carriage Assembly
Pg. 23 End Gear Guard Assembly

SHELDON

SHELDON MACHINE CO., INC.
4258 N. KNOX AVE. • CHICAGO, ILLINOIS 60641
PHONE: (312) 685-1970 • CABLE ADDRESS: SHELDONCO

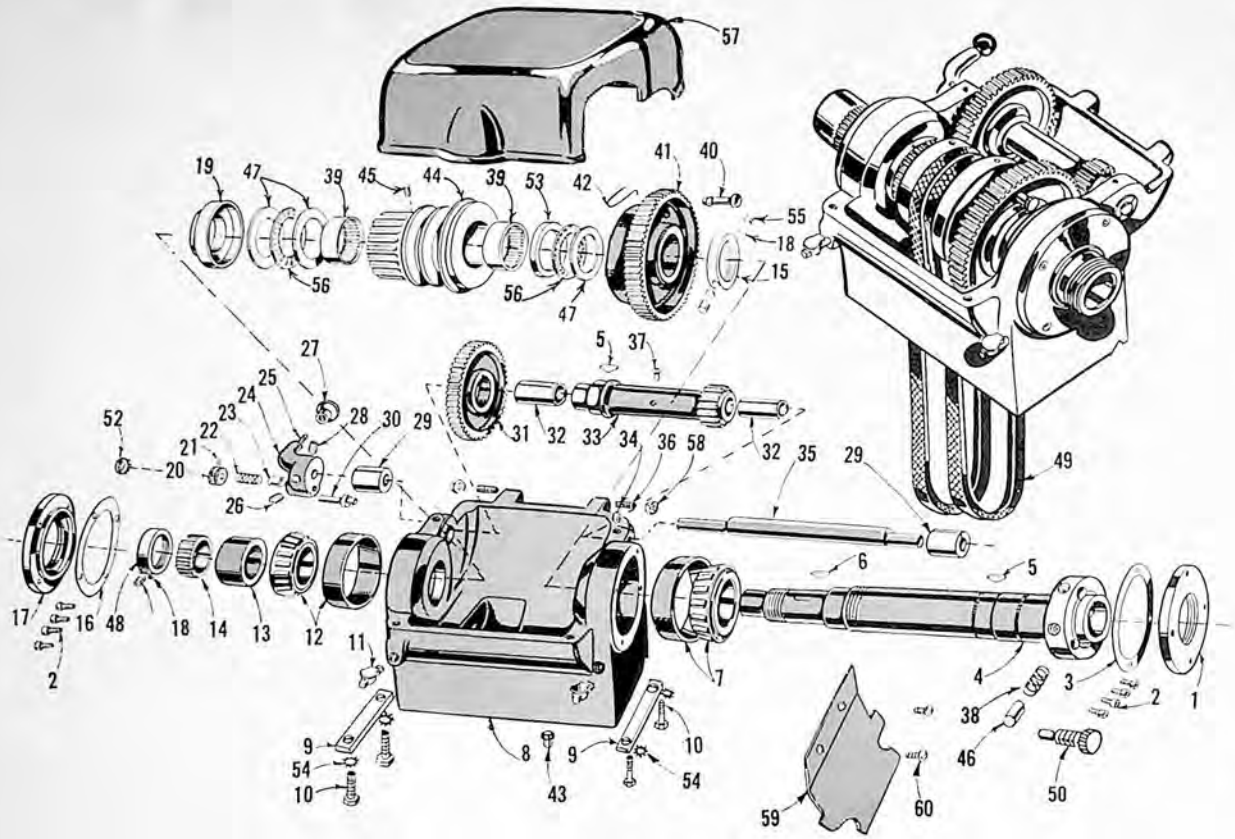

HEADSTOCK ASSEMBLY

Ref. No.	Description	S Part No.	M Part No.	Quantity
1	Front Bearing Cap	T-1401	T-1401	1
2	Cap Screw	A-395	A-395	8
3	Gasket For Front Bearing Cap	T-1401G	T-1401G	1
4	4" D.I. Spindle	M-1830-1	M-1830-1	1
5	Hi Pro Key	A-905	A-905	2
6	Hi Pro Key	A-902	A-902	1
7	Front Timken Bearing	A-1142	A-1142	1
8	Headstock (Main Casting)	T-1400-2	TM-1400-2	1
9	Headstock Clamp	K-70A	K-70A	2
10	Hex Head Cap Screw 3/8-16 x 1-1/2	A-306	A-306	4
11	Gits Elbow Oil Cup	A-1010	A-1010	2
12	Rear Timken Bearing	A-1143	A-1143	1
13	Take Up Collar	T-1408-1	T-1408-1	1
14	32 Tooth Spindle Feed Gear	L-1663	L-1663	1
15	Sheave Locknut	M-1592	M-1592	1
16	Rear Gasket	T-1402G	T-1402G	1
17	Rear Bearing Cap	T-1402-1	T-1402-1	1
18	Plug For Lock Screw	L-776	L-776	3
19	Spacer	M-2202	M-2202	1
20	Plunger Knob	K-543	K-543	1
21	Spring Pin 1/8 Dia. x 3/4 Lg.	AA-861	AA-861	1
22	Plunger Spring	K-546	K-546	1
23	Bushing	K-98-1	K-98-1	1
24	Back Gear Handle Body	T-695	T-695	1
25	5/16-18 Stud	M-2421	M-2421	1
26	Socket Set Screw #8-32 x 3/16	A-647	A-647	1
27	Tapered Handle	AAA-1935	AAA-1935	1
28	Socket Set Screw 3/8-16 x 1/2	AA-612	AA-612	1
29	Rear Eccentric Bushing	T-1410	T-1410	2
30	Quadrant Lever Plunger	K-1125	K-1125	1
31	50 Tooth Back Gear	S-1405X-1	S-1405X-1	1
32	Bronze Bearing	A-1357	A-1357	2
33	18 Tooth Back Gear Pinion	S-1406X-2	S-1406X-2	1
34	Socket Set Screw 3/8-24 x 1"	A-656	A-656	2
35	Back Gear Shaft	S-1409	S-1409	1
36	Set Screw 1/4-20 x 1 1/4	A-675	A-675	2
37	Oil Hole Cover	A-1003	A-1003	1
38	Detent Spring	A-2076	A-2076	3
39	Torrington Bearing	AAA-1100	AAA-1100	2
40	Plunger For Face Gear	K-38	K-38	1
41	62 Tooth Face Gear	M-2200	M-2200	1
42	Spring For Plunger	L-40	L-40	1
43	Locating Pin	T-1417	T-1417	1
44	V-Belt Pulley	M-2201	M-2201	1
45	Alemite Fitting	A-1077	A-1077	1
46	Cam	A-2083	A-2083	3
47	Torrington Thrust Race	AA-1199	AA-1199	3
48	Spindle Thrust Nut	XL-1562	XL-1562	1
49	V-Belts			2
50	Screw	A-384	A-384	3
51	Set Screw 1/4-20 x 1/4	A-601	A-601	1
52	Plug Button	A-502	A-502	1
53	Hardened Washer	M-2203	M-2203	1
54	Lockwasher	A-202	A-202	4
55	Socket Set Screw 1/4-20 x 5/16	A-605	A-605	2
56	Torrington Thrust Bearing	AA-1198	AA-1198	2
57	Headstock Cover	T-1420-1	T-1420-1	1
58	Hex Nut 1/4-20	A-105	A-105	2
59	Chip Guard	S-1777	S-1777	1
60	Slotted Pan Head Screw	AA-341	AA-341	2

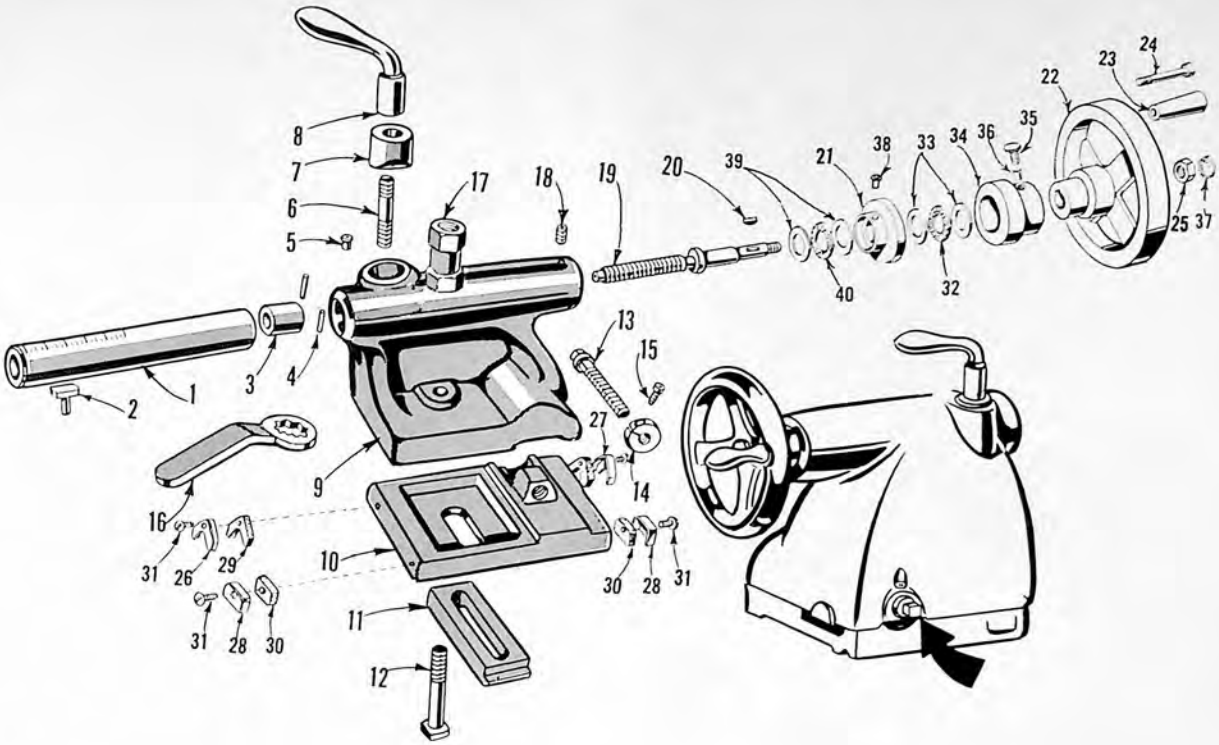

TAILSTOCK ASSEMBLY

Ref. No.	Description	S Part No.	M Part No.	Quantity
1	Tailstock Spindle	S-1509	S-1509	1
2	Spindle Key	TT-129	TT-129	1
3	Spindle Nut	K-285	K-285	1
4	Groove Pin	A-896	A-896	2
5	Gits Oil Cover	A-1003	A-1003	2
6	Stud	M-2170	M-2170	1
7	Spindle Clamp Bushing	K-212	K-212	1
8	Binding Handle	K-570	K-570	1
9	Tailstock Top	S-1428	M-1428	1
10	Tailstock Base	SM-1426-1	SM-1426-1	1
11	Tailstock Clamp	K-80X	K-80X	1
12	Square Head Machine Bolt	A-348	A-348	1
13	Adjusting Screw	S-1510	S-1510	1
14	Adjusting Screw Nut	S-1511	S-1511	1
15	Socket Head Cap Screw	A-399	A-399	1
16	Tailstock Wrench	K-509-1	K-509-1	1
17	Clamp Bolt Nut	L-1907	M-1908	1
18	Set Screw 5/16-18 x 5/16	A-613	A-613	1
19	Tailstock Screw	S-1513	S-1513	1
20	Woodruff Key	A-900	A-900	1

Ref. No.	Description	S Part No.	M Part No.	Quantity
21	Tailstock Bushing	M-2414	M-2414	1
22	6 1/2" Dia. Handwheel	10909	10909	1
23	Machine Handle	10908	10908	1
24	Shoulder Screw	AA-435	AA-435	1
25	Stop Nut	A-138	A-138	1
26	V-Wiper Retainer Right	LK-487-2	LK-487-2	1
27	V-Wiper Retainer Left	LK-487-1	LK-487-1	1
28	Flat Wiper Retainer	LK-489	LK-489	2
29	Felt "V" Wiper	K-1141-1	K-1141-1	2
30	Flat Felt Wiper	K-1142	K-1142	2
31	Round Head Machine Screw	A-314	A-314	4
32	Torrington Thrust Bearing	AAA-1112	AAA-1112	1
33	Torrington Thrust Race	AAA-1113	AAA-1113	2
34	Micro Collar	M-2415	M-2415	1
35	Micro Collar Screw	K-458	K-458	1
36	Brass Plug	L-853	L-853	1
37	Plug Button	A-516	A-516	1
38	Alemite Fitting	A-1035	A-1035	1
39	Torrington Thrust Race	AAA-1126	AAA-1126	2
40	Torrington Thrust Bearing	AAA-1127	AAA-1127	1

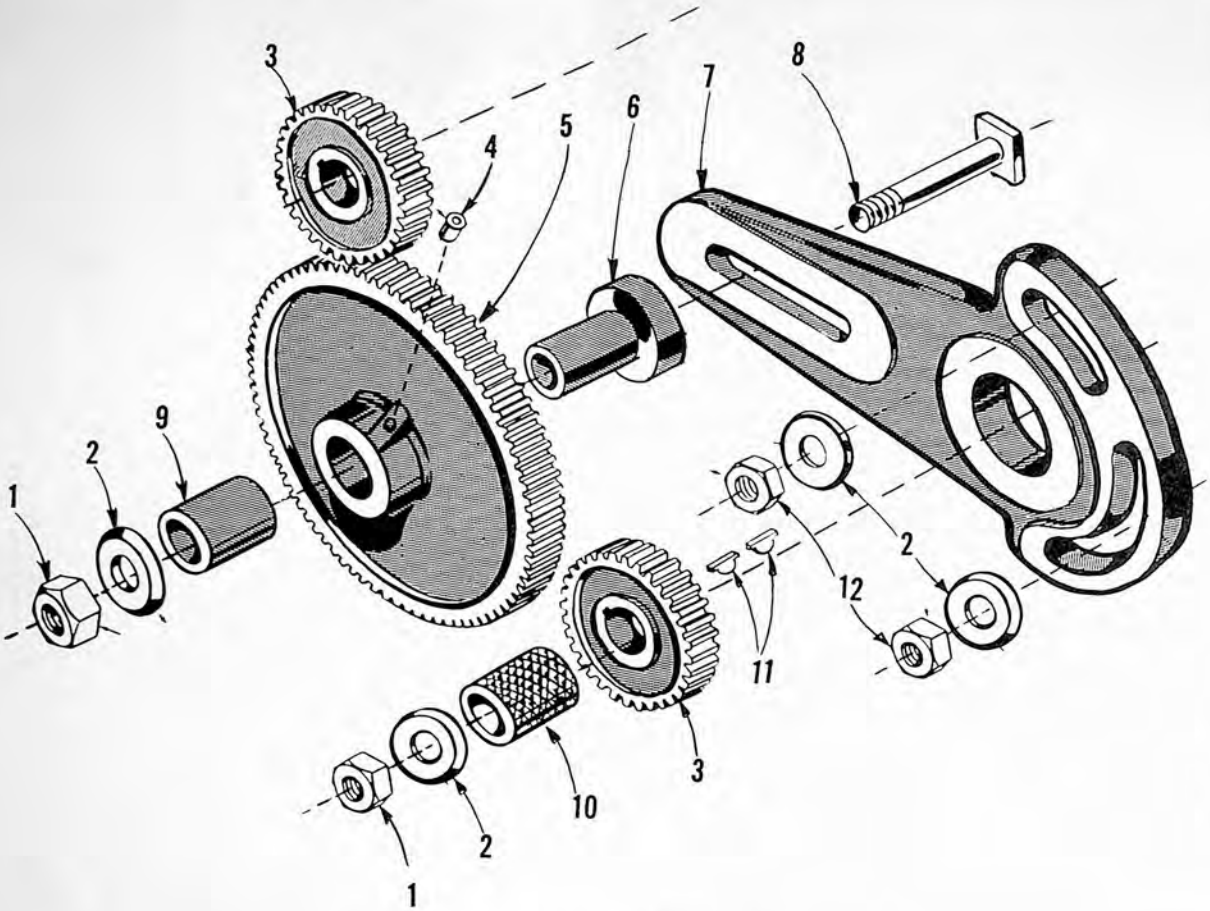

END GEARING ASSEMBLY

Ref. No.	Description	S Part No.	M Part No.	Quantity
1	3/8-16 Hex Nut	A-102	A-102	2
2	Washer	K-93	K-93	4
3	44 Tooth Formica Gear	AS-L-1664F	AS-L-1664F	2
4	Gits Oil Cup	A-1003	A-1003	1
5	Intermediate Gear	L-1603	M-1644	1
6	Bushing	L-1604	L-1604	1
7	End Gear Lever Quadrant	L-1602	L-1602	1
8	Square Head Bolt	L-167	L-167	1
9	Oilite Bearing	A-1379	A-1379	1
10	Spacer Bushing	K-446	K-446	1
11	Hi Pro Key	A-902	A-902	2
12	3/8-16 Hex Nut	A-100	A-100	2

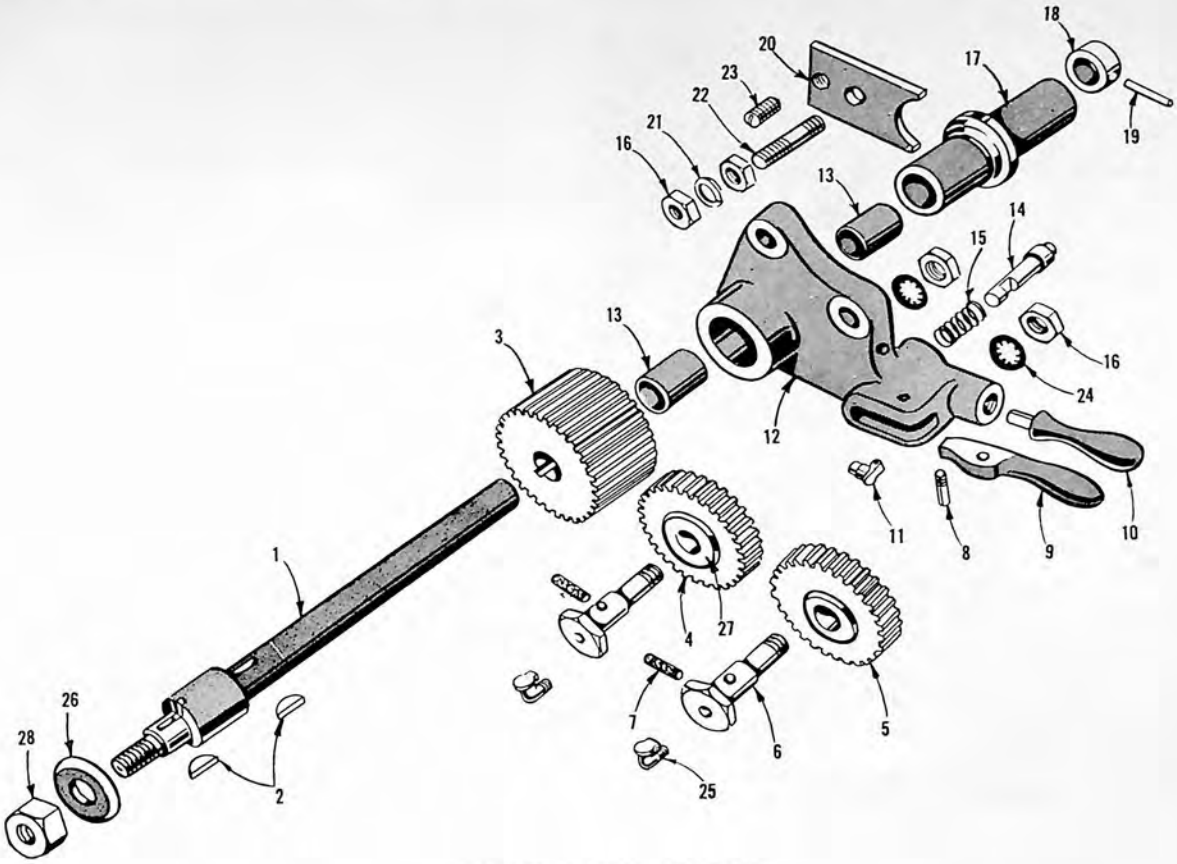

REVERSE PLATE ASSEMBLY

Ref. No.	Part No.	Description	Quantity
1	L-1669	Reverse Plate Shaft	1
2	A-902	Hi-Pro Key	2
3	L-1667	32 Tooth Steel Gear	1
4	L-1666F	30 Tooth Formica Gear with Bushing	1
5	L-1665	28 Tooth Gear	1
6	L-1779	Stud	2
7	S-1140	Wick	2
8	L-206	Lever Screw	1
9	L-76	Lever	1
10	L-827	Machine Handle	1
11	A-1001	Gits Oil Hole Cover	1
12	S-1442	Reverse Plate	1
13	S-1904	Bushing	2
14	L-82	Pull Pin	1
15	L-83	Spring	1
16	A-100	Jam Nut	4
17	S-73	Reverse Plate Bushing	1
18	K-51	Collar	1
19	AA-853	Spring Pin	1
20	S-31	Tension Plate	1
21	A-203	Lockwasher	1
22	S-702	Stud	1
23	A-609	Set Screw 3/8-16 x 3/4	1
24	A-202	Shake-proof Lockwasher	2
25	A-1040	Gits Elbow Oil Cup	2
26	K-93	Washer	1
27	L-1666-F1	Bushing	1
28	A-102	Hex Nut	1

AS-S-1442

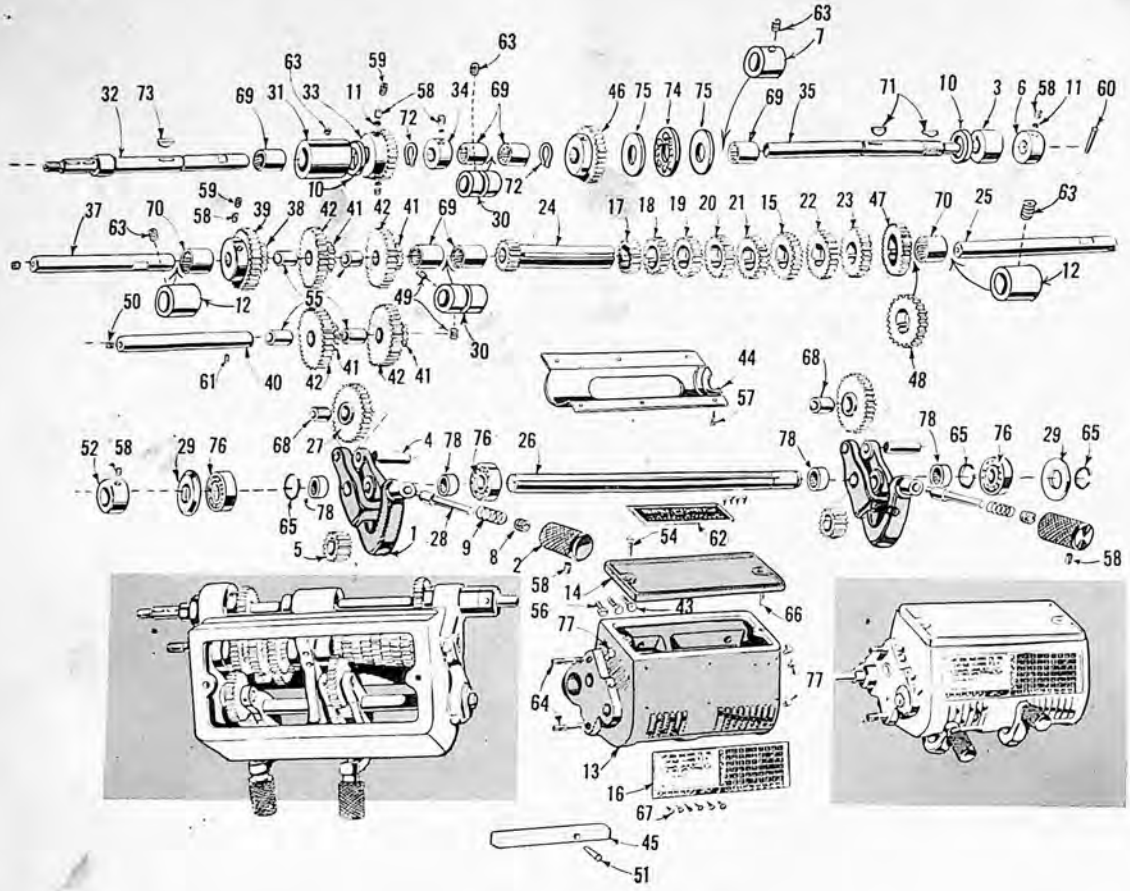

GEAR BOX ASSEMBLY

Ref. No.	S & M Part No.	Description	Quantity
1	C-402	Tumbler	2
2	C-418	Pull Pin Knob	2
3	C-420	Adjusting Collar	1
4	L-1759	Tumbler Intermediate Shaft	2
5	C-430A	Tumbler Gear 16 Tooth	2
6	C-434	Collar Lock Nut	1
7	M-2206	Bushing	1
8	L-1796	Tumbler Handle Bushing	2
9	K-546	Plunger Spring	2
10	AA-1334	Bronze Thrust Bearing	2
11	L-776	Brass Plug	3
12	M-2207	End Bushing	2
13	L-1600-3	Gear Box (Main Casting)	1
14	L-1601-1	Gear Box Cover	1
15	L-1606-1	26 Tooth Cluster Gear	1
16	L-1607-1	Thread Cutting Chart	1
17	L-1608-1	18 Tooth Cluster Gear	1
18	L-1609-1	20 Tooth Cluster Gear	1
19	L-1610-1	22 Tooth Cluster Gear	1
20	L-1611-1	23 Tooth Cluster Gear	1
21	L-1612-1	24 Tooth Cluster Gear	1
22	L-1613-1	27 Tooth Cluster Gear	1
23	L-1614-1	28 Tooth Cluster Gear	1
24	L-1615-1	16 Tooth Sleeve Gear	1
25	L-1616-1	Cluster Gear Shaft	1
26	L-1617-2	Tumbler Shaft	1
27	TC-433	Tumbler Intermediate Gear	2
28	L-1619-1	Tumbler Pull Pin	2
29	L-1620	Washer	2
30	M-2208	Center Bushing	2
31	L-1622-1	Bushing	1
32	L-1623-2	Input Shaft	1
33	L-1624	28 Tooth Input Gear	1
34	L-1625	Collar For Input Shaft	1
35	L-1626-2	Lead Screw Shaft	1
36			
37	L-1628-1	Intermediate Shaft	1
38	L-1629	16 Tooth Pinion	1
39	L-1630	32 Tooth Intermediate Gear	1
40	L-1631	Lower Gear Shaft	1
41	L-1632	16 Tooth Compound Gear	4
42	L-1633	32 Tooth Compound Gear	4
43	A-349	Hex Hd. Cap Screw 5/16-18 x 1 3/4	1
44	L-1854-1	Back Cover	1
45	M-2209	Spacer Block	1
46	L-1815-2	28 Tooth Input Gear	1
47	L-2069	30 Tooth Cluster Gear	1
48	L-2070	32 Tooth Cluster Gear	1
49	A-643	Socket Set Screw 5/16-18 x 1/4	2
50	L-1760	Plug For Lower Shaft	1
51	A-897	Spring Pin 3/16 Dia. x 1 1/2 Lg.	1
52	U-140	Collar	1
53	A-1029	Alemite Fitting 67 1/2°	1
54	A-300	Fill. Hd. Screw 5/16-18 x 5/8	1
55	A-1398	Oilite Bearing	4
56	A-347	Hex Hd. Cap Screw 5/16-18 x 1"	2
57	A-872	#4 Drive Stud	6
58	A-601	Socket Set Screw 1/4-20 x 1/4	8
59	A-623	Socket Set Screw 1/4-20 x 3/16	3
60	A-801	Taper Pin	1
61	A-611	Socket Set Screw 1/4-20 x 1/2	1
62	L-1757	Instruction Plate	1
63	A-656	Socket Set Screw 5/16-18 x 3/8	5
64	A-1250	3/8-16 Stud	2
65	A-1216	Snap Ring	3
66	A-850	Groove Pin	1
67	A-852	#O Drive Stud	10
68	A-1188	Torrington Needle Bearing	2
69	A-1189	Torrington Needle Bearing	6
70	A-1190	Torrington Needle Bearing	2
71	A-902	Hi Pro Key	2
72	A-1215	Snap Ring	2
73	A-906	Hi Pro Key	1
74	L-1906	Steel Ball Retainer	1
75	A-1198	Thrust Washer	2
76	A-1192	New Departure Bearing	3
77	A-1011	Alemite Fitting 65°	1
78	L-1797	Bearing	4

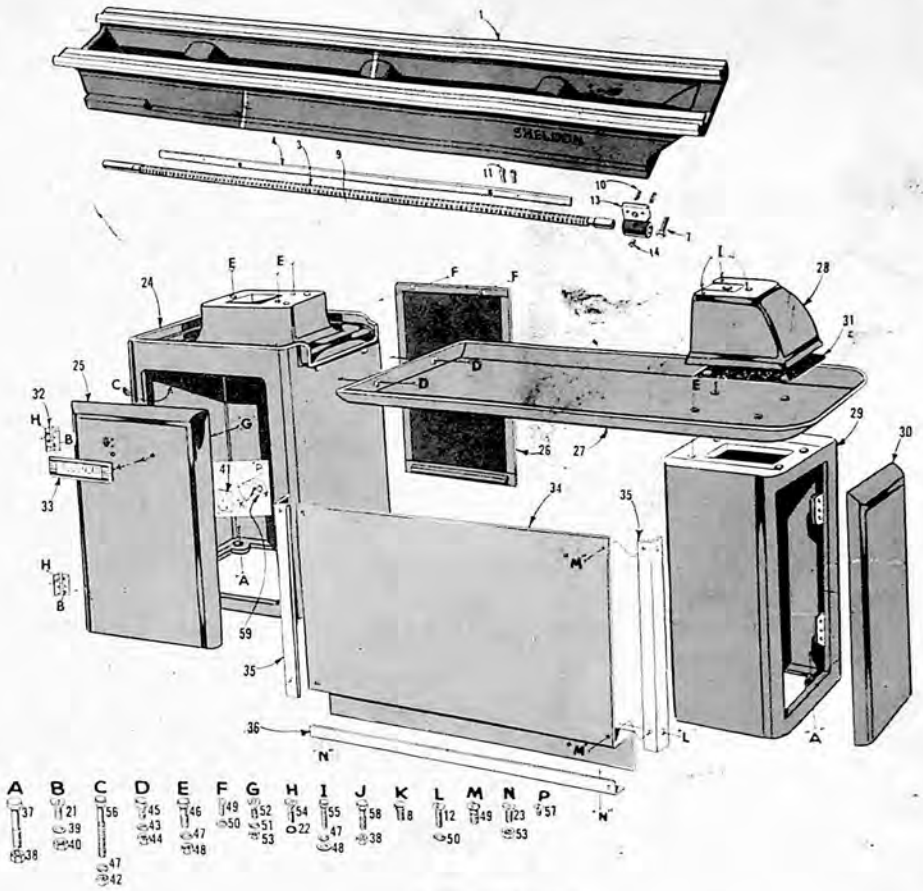

S & M BED & PARTS

Ref. No.	S & M Part No.	Description	Quantity
1	K-143X	46" Bed	
	K-144X	56" Bed	
	K-623X	70" Bed	1
2	A-889	Groove Pin	2
3	M-876X-2	Lead Screw For 46" Bed	
	M-874X-1	Lead Screw For 56" Bed	
	K-1322-1	Lead Screw For 70" Bed	1
4	K-147X-1	Rack For 46" Bed	
	K-1115-1	Rack For 56" Bed	
	K-1117-1	Rack For 70" Bed	1
5	K-1641	End Gear Guard Bracket	1
6	K-1642	"S" End Gear Cover	
	M-1642	"M" End Gear Cover	1
7	A-323	Hex Hd. Cap Screw 3/8-16 x 1 1/4	1
8	A-311	Round Hd. Machine Screw 1/4-20 x 1/2	2
9	AA-857	Spring Pin 3/16 Dia. x 1" Lg.	As Req.
10	A-856	Dowel Pin 1/4 Dia. x 1" Lg.	2
11	A-327	Socket Hd. Cap Screw 1/4-20 x 3/4	As Req.
12	AA-342	Round Hd. Machine Screw 1/4-20 x 1"	
13	M-943	Lead Screw Bearing	1
14	A-1000	Gits Oil Cup	1
15	A-303	Hex Hd. Cap Screw 1/4-20 x 3/4	3
16	A-656	Socket Set Screw 5/16-18 x 3/8	2
17	L-1868	Knurled Nut	1
18	L-1634	Stud 1/4-20 x 1 3/16	1
19	A-852	#O Drive Stud	As Req.
20	S-1163	Leveling Plate	1
21	AA-350	Flat Hd. Machine Screw #8-32 x 1"	6
22	A-247	#10 Lockwasher	6
23	AA-323	Flat Hd. Machine Screw #10-32 x 1/2	3
24	L-1864M	Pedestal E & U Drive	1
24	UW-2073	Pedestal W-Drive	1
25	L-1869	Left Door E & W Drive	1
25	L-1869-1	Left Door U Drive	1
26	L-1896	Expanded Metal Screw E & U Drive	1
26	M-2065	Expanded Metal Screw W-Drive	1
27	L-1867-8	Chip Pan For 46" Bed	1
27	L-1867-7	Chip Pan For 56" Bed	1
27	L-1867-5	Chip Pan For 70" Bed	1
28	L-1866	Pan Block	1
29	L-1865	Right Cabinet Leg	1
30	L-1870	Right Door	1
31	L-1899	Gasket	1
32	A-2104	Door Hinge	2
33	40002	Name Plate	1
34	M-2254-1	Front Enclosure For 46" Bed	
	M-2484	Front Enclosure For 56" Bed	
	M-2488	Front Enclosure For 70" Bed	1
35	32117	Mounting Bracket	2
36	M-2486	Kick Plate For 46" Bed	
	M-2485	Kick Plate For 56" Bed	
	M-2487	Kick Plate For 70" Bed	1
37	AA-346	Hex Hd. Tap Bolt 1/2-13 x 3"	7
38	A-106	1/2-13 Hex Nut	8
39	A-219	#8 Lockwasher	6
40	A-134	#8-32 Hex Nut	6
41	L-2158	Mounting Plate	1
42	A-107	3/8-16 Hex Nut	1
43	A-209	3/8 Washer	2
44	A-226	5/16 Lockwasher	2
45	A-441	Hex Hd. Cap Screw 5/16-18 x 7/8	2
46	AA-311	Socket Hd. Cap Screw 3/8-16 x 1 1/4	7
47	A-203	3/8 Lockwasher	11
48	A-201	3/8 Steel Washer	10
49	AA-437	Button Hd. Cap Screw 1/4-20 x 3/8	10
50	A-214	1/4 Lockwasher	8
51	A-204	#10 Lockwasher	2
52	AA-418	Flat Hd. Socket Cap Screw	2
53	A-128	#10-32 Hex Nut	5
54	A-430	Flat Hd. Machine Screw #8-32 x 3/8	6
55	A-429	Socket Hd. Cap Screw 3/8-16 x 1 3/4	3
56	AA-403	Hex. Hd. Cap Screw 3/8-16 x 5"	1
57	A-455	Round Hd. Machine Screw #6-32 x 1/4	3
58	AA-369	Hex Hd. Tap Bolt 1/2-13 x 2 1/4	1
59	A-1457	Door Catch	1

INSTRUCTIONS FOR UNCRATING AND SETTING UP A SHELDON LATHE

All Sheldon Lathes come completely assembled, tightened up, and ready to be placed on the floor, oiled, and put to work. They come crated with bench legs, floor legs or pedestal base, and motor drives (if any) attached, with all machined and hand scraped parts protected with rust preventative, un-machined parts painted, the entire lathe wrapped in a water and grease-proof cover, and strongly braced and crated. In each crate is a box of "Standard Equipment."

When uncrating, first remove inside cross braces, then remove bottom outside cross braces, loosen upright boards completely around the base, and lift the crate off the lathe. Great care should be taken in loosening crate, as a slip of the hammer or bar can do serious damage to the lathe.

With lathe uncrated, next open your box of "Standard Equipment" and check items included against the "Standard Equipment" listed on packing list. After all parts are accounted for, crating materials may be removed, and you are ready to move your lathe into working position.

In selecting the proper location for your lathe, remember (1) That operation is from the apron side of lathe; allow at least 40" to 48" operator clearance in front of the lathe. (2) That the best working light should shine over the operator's shoulders and should be ample. (3) That lathe must be on a solid (concrete if possible) foundation. If on wood floor, flooring should be braced, if necessary to prevent sagging or settling because the lathe must be set solidly, squarely, and rigidly, and must be level if it is to work accurately. (4) That allowance should be made back end and overhead for later addition of taper attachments, overhead motor drive, or other accessories. End clearance of the headstock should be provided, where possible, if bar stock is to be fed through the spindle. Where the placing of more than one lathe is contemplated, arrangement in oblique rows will save much floor space, as long bar stock for each machine can be fed from stock rests placed behind the adjacent lathe. (5) Bench lathes should be mounted on a heavy rigid and level bench which should be about 28" high.

Before permanently anchoring the lathe to the floor or bench, be sure that the bed is absolutely level. Remember, no lathe can do accurate work unless it is solidly anchored and level both along and across the bed. Shim up any low points in floor or bench using sheet steel or other non-compressible material. After tightening anchor bolts check again for level. Use a precision level.

BOLTING DOWN AND LEVELING YOUR LATHE

PROCEDURE FOR BOLTING DOWN LATHE

If your floor is concrete, anchor bolts are recommended.....if on wood, lag screws. Anchor bolts or lag screws are not supplied with the lathe.

Since the anchor bolts and lag screws must be accurately located in the floor, pre-drilling is not recommended. Neither dimensional drawings nor templates give the accurate center distances required between bolt holes. These can only be obtained by setting the lathe in its exact location and spotting the center of the bolt holes in the floor.

CONCRETE FLOORS

Place the lathe in the location desired, selecting a smooth surface where there are no signs of the concrete floor sagging. Mark the holes to be drilled for the headstock pedestal leg first. Move the lathe aside. Since a 1/2" anchor should be used, drill the holes approximately 7/8" x 1-1/2" deep. Drive in the anchors, and replace the lathe. Partially screw in the hold down bolts in order to hold the lathe in place while marking the holes to be drilled for the tailstock pedestal.

Again, lift or move the lathe aside and drill the tailstock holes. When these anchors are in place, the lathe can be lifted back into position. Partially screw in all of the hold down bolts. The lathe is now ready for leveling.

WOODEN FLOORS

On wooden floors it is desirable to bolt steel plates to the floor at the approximate location of the six hold down and leveling screw bosses on the pedestal legs. The steel plates should be at least 6" square and 1/4" thick. They will provide a good firm support on which to level the lathe and will also tend to eliminate some of the vibration inherent in wooden floors.

Spot the hold down holes in the same way suggested for concrete floors. Drill deep enough to accommodate 1/2" x 6" lag screws. Spot the lathe in place and partially tighten down on the lag screws. The lathe is now ready for leveling.

LEVELING THE LATHE

To accurately level your lathe, a precision machinist's level must be used. In the construction of your lathe, the alignment tolerances were held to tenths of thousandths of an inch. It is important that you hold these same tolerances in leveling. A carpenter's level or a combination square level will not give you the accuracy required. A precision ground bulb level graduated in .0005" per foot is recommended.

(Mark one end of the level with a piece of chalk so that the level always points in the same direction when you are taking your readings.)

Back-off all of the leveling screws to be sure that both pedestal legs are setting solidly on the floor.

Now place the level across both V-ways at the headstock end of the bed. The tops of the V-ways are precision ground to facilitate leveling, and additional parallel blocks are not required. Adjust the two outside leveling screws in the headstock pedestal to obtain a "zero" reading on the level.

Move the level to the tailstock end of the bed, adjusting the two outside leveling screws in the tailstock pedestal to obtain the same reading as on the headstock end.

It will be necessary to repeat this procedure several times, making necessary minor adjustments. You will find that adjustments at one end of the lathe will affect the level of the other. When both ends of the lathe bed are level, turn down the two center leveling screws until they rest under a slight tension on the floor. This tension should not be sufficient to change the level reading.

Although the lathe should now be accurately leveled, it is important to recheck the level both along the flat way and across the bed. Very few, if any, minor adjustments should have to be made.

FUTURE LEVELING

The level of your lathe should be checked at least once a month. You will probably find it desirable to check the lathe level as part of each new job set-up.

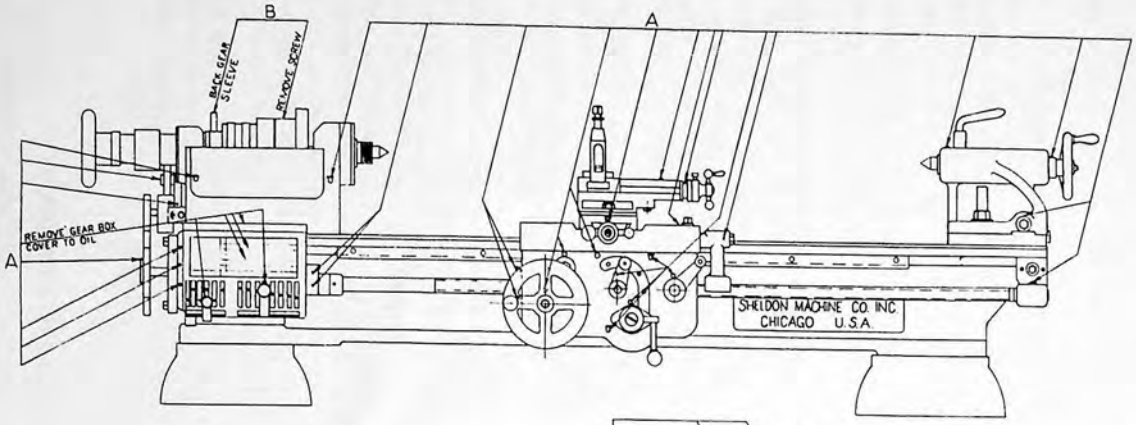

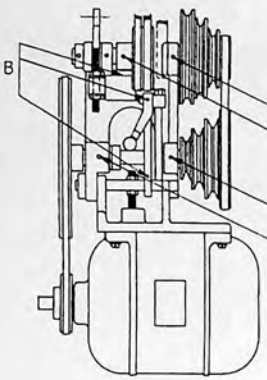

E-DRIVE

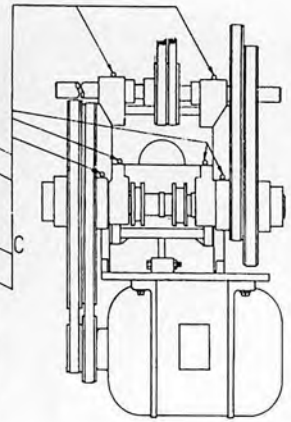

U-DRIVE

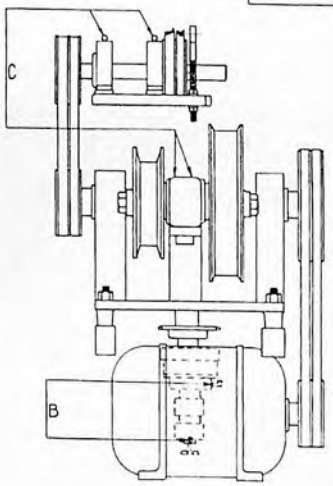

W-DRIVE

LUBRICATION INSTRUCTIONS

A - OIL DAILY
B - OIL EVERY 200 HOURS
C - GREASE EVERY 200 HOURS

CLEAN AND OIL FREQUENTLY:
COMPOUND, CROSS FEED AND LEAD SCREWS, SWIVEL, WAYS, AND DOVETAILS.

FOR A & B - USE HIGH QUALITY GENERAL PURPOSE MACHINE OIL (S.A.E. 20) SUCH AS GARGOYLE VACTRA OIL, HEAVY MEDIUM

FOR C - USE HIGH QUALITY GENERAL PURPOSE ANTI-FRICTION BEARING GREASE, SUCH AS GARGOYLE GREASE BRB NO.1

USE THE ABOVE SOCONY-VACUUM PRODUCTS OR EQUIVALENT

5-22-59 S-1162-2

OUTLINE FOR REPLACEMENT OF V-BELTS

Motor drive to countershaft:

Release belt tension by rotating tension nut provided and simply slip belt off over left end of pulley.

Lower Countershaft to Upper Countershaft:

Release belt tension by raising cam lever control and rotate belt off last right step of pulley.

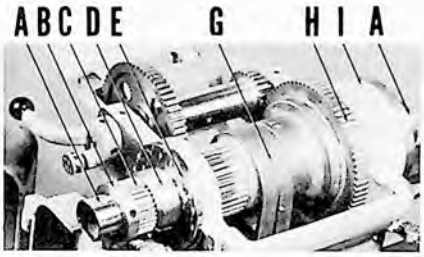

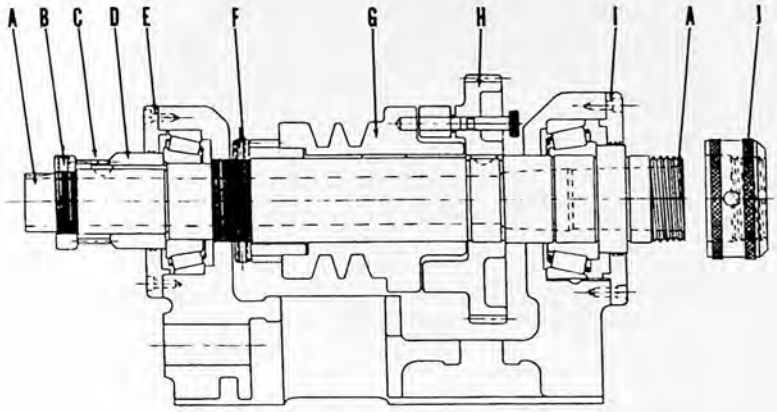

A - Spindle
B - Thrust Nut
C - Feed Gear
D - Spacer Collar
E - Rear Bearing Cap
F - Threaded Keeper Collar
G - Double Groove Sheave
H - Large Face Gear
I - Front Bearing Cap
J - Nose Cap
(Thread Protector)

Spindle Belts:

1. (a) Release belt tension by adjusting nuts of support located in front upper left hand corner of underneath drive cabinet.

   (b) Release set screws in countershaft collars and pulleys – slide countershaft to extreme right and remove belts.

2. Remove socket head screws from end caps and remove caps.

3. Remove set screw in thrust nut left end of spindle (taking care not to overlook the brass pad, which bears against threaded portion of spindle.) Remove thrust nut.

4. Slide keyed gear and keyed collar off rear of spindle. IMPORTANT: REMOVE HI-PRO KEY.

5. Remove three set screws from narrow width threaded keeper collar which is located next to gear within the bowl of headstock. (Again, do not overlook brass pad beneath set screws.) Unscrew keeper collar maximum amount away from headstock sheave. The pulley assembly is not keyed to spindle.

6. Place two blocks of wood, one on either side of spindle between the large face gear and headstock casting. (Wood will act as a pad to protect face gear and lockpin from damage as spindle is pressed from headstock in the direction of the tailstock.) Replace thrust nut on spindle to protect threads – then hold a piece of tubing (with large enough hole to clear end of spindle) against thrust nut to act as pad when driving spindle toward tailstock.

7. Drive spindle towards tailstock. (Two press fits act as resistance; one the large face gear, the other, the rear bearing inner ring.)

8. As spindle is driven toward tailstock, unscrew keeper collar, progressively, until free from threaded portion of spindle.

9. Lift pulley assembly out of headstock bowl, replace old "V" belts with pair of new "V" belts.

OUTLINE FOR REPLACEMENT OF V-BELTS (Cont'd)

10. Clean all assemblies.
    CAUTION: Inner race of front bearing should be seated against shoulder on spindle to insure that no dirt or grit will interfere with proper seating of bearing when headstock is reassembled.

11. Reassemble spindle assembly from front to rear.

    (a) Place spindle nose cap on spindle to protect nose threads.

    (b) Line up keyway of large face gear with key in spindle. By bucking up against the large face gear and tapping against the spindle nose cap, the gear may be worked into place. The large gear will seat on the spindle shoulder.

    (c) Spindle pulley should be butted against large face gear lightly, allowing approximately .005'' clearance, and secured in place by keeper collar with set screws bearing on the small brass pads.

    (d) The rear bearing may now be lightly tapped into place, or drawn into place by use of the thrust nut and spacers.

    (e) Replace HI-PRO key, collar, keyed gear, and thrust nut.

    (f) Replace front and rear bearing caps. (''S'' witness mark goes on bottom.)

    (g) Adjust thrust nut to eliminate end play. (Secure with set screws and brass pads.)

12. Connect belts to pulley on underneath drive countershaft, tightening set screws and making sure that belt is in alignment.

13. Adjust belt tension.

14. Lubricate spindle bearings before operating. Use S.A.E. No. 10 lubricating oil.

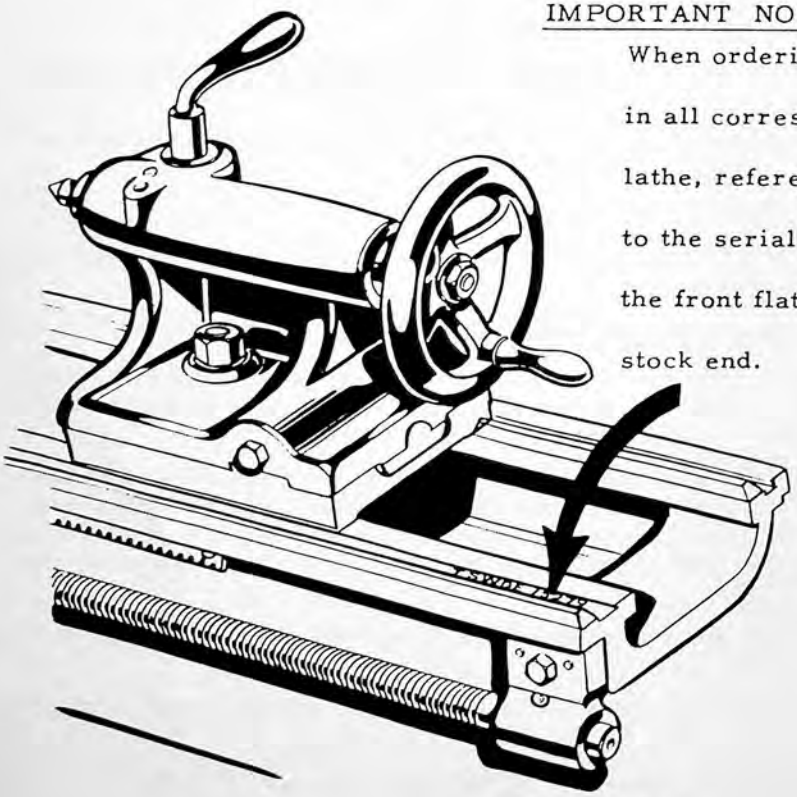

IMPORTANT NOTE FOR ORDERING PARTS

When ordering replacement parts, and in all correspondence pertaining to a lathe, reference should always be made to the serial number, which is found on the front flatway of the bed at the tail-stock end.

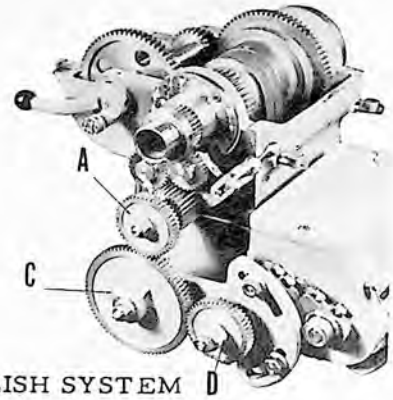

ENGLISH SYSTEM

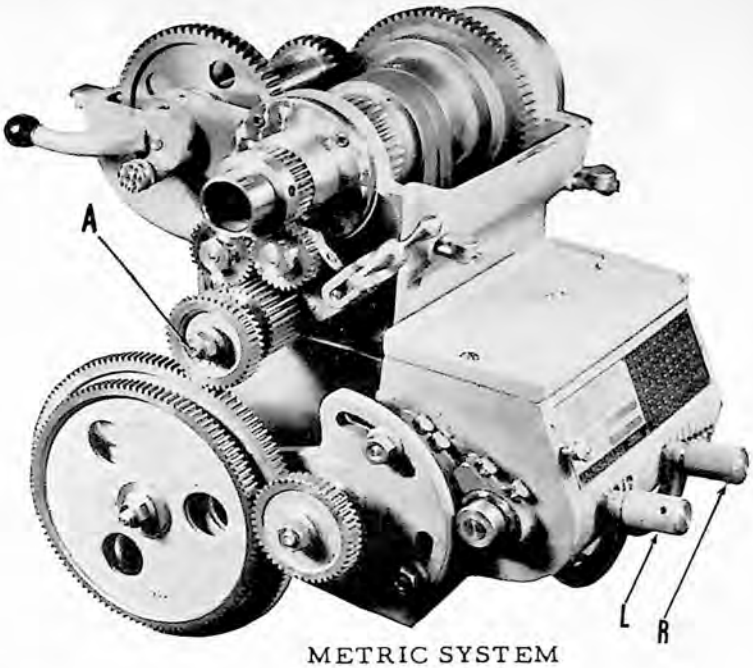

METRIC SYSTEM

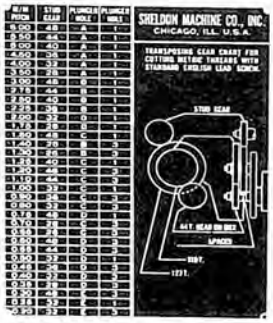

HOW TO USE METRIC ATTACHMENT

It's easy to cut metric threads on your new Sheldon lathe. To set-up for metric thread cutting it is necessary to remove some of the standard end gears and replace with special gears furnished with the metric attachment.

By using the metric threading chart above, you will be able to determine which special gear to mount on the reverse plate stud (A), as well as determine relative position of the gear box tumbler levers (L) and (R). The metric illustration above shows set-up for cutting 2.50 m/m pitch thread. A 40 tooth gear has been mounted on the reverse plate stud (A) in place of the 44 tooth gear used in the English system. The left gear box tumbler lever (L) has been engaged in plunger hole marked "B". The right tumbler lever (R) has been engaged in plunger hole "1". The intermediate gear (C) used on the English system has been replaced by mounting a compound gear (127 & 110 tooth) on the intermediate gear shaft (110 tooth gear on outside.) The Knurled spacer bushing (D) on the gear box shaft has been interchanged with the 44 tooth gear mounted on the same shaft - so that the gear is now in line with the 110 tooth gear with which it meshes.

To cut other size metric threads, refer to the metric threading chart, then install the correct gear on the reverse plate stud as well as move the gear box tumbler levers as indicated.

When cutting metric threads, it is not possible to use the thread chasing dial in the conventional manner. Once the half nuts are engaged, they should remain engaged until the thread being cut is completed. The tool is disengaged from the work at the end of the cut, then the motor is reversed, bringing the cutting tool back to the start for the next cut.

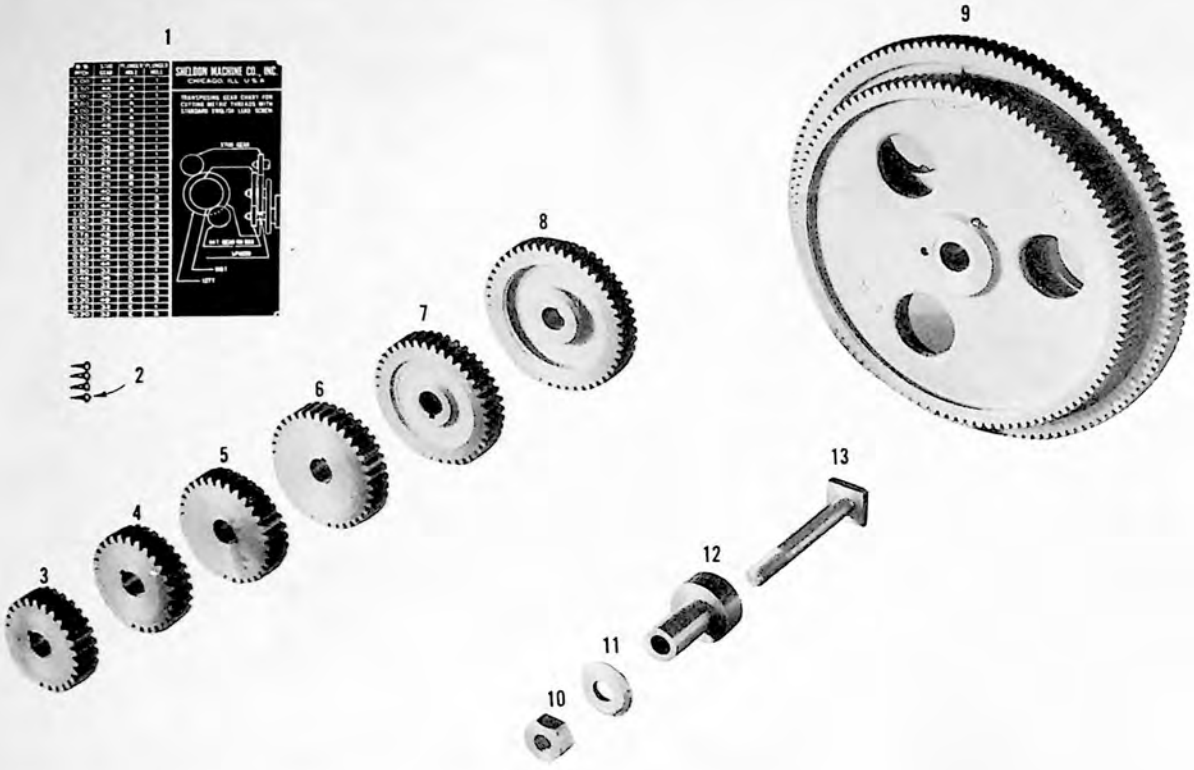

METRIC ATTACHMENT

Ref. No.	Part No.	Description	Quantity
1	L-1671	Metric Chart	1
2	A-852	Drive Stud, Round Head	4
3	L-1687	Gear 26 Tooth	1
4	L-1688	Gear 28 Tooth	1
5	L-1689	Gear 32 Tooth	1
6	L-1690	Gear 36 Tooth	1
7	L-1691	Gear 40 Tooth	1
8	L-1692	Gear 48 Tooth	1
9	L1694A	Compound Metric Gear Assembly Consisting of	1

Quantity	Part No.	Description
1	L1694	Gear 127 Tooth
1	L1693	Gear 110 Tooth
1	A-1379	Bushing
1	A-881	Dovel Pin
1	A-1004	Oil Cover 3/16" Drive

10	A-102	Nut, Full 3/8-16	1
11	K-93	Washer, Hardened	1
12	L-1604	Bushing	1
13	L-167	Square Head Bolt	1

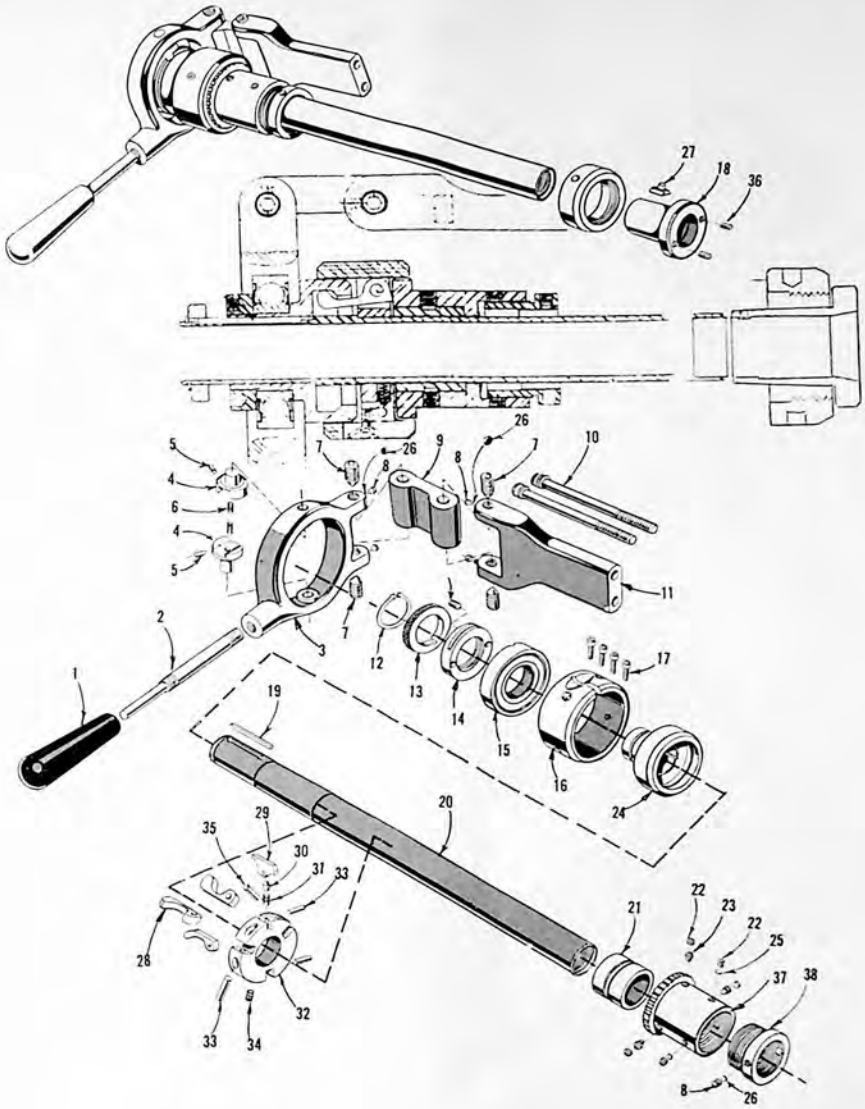

HAND LEVER COLLETT ATTACHMENT

Ref. No.	Description	Quantity	S Part No.	M Part No.
1	Plastic Handle	1	AAA-1933	AAA-1933
2	Handle	1	M-2442	M-2442
3	Shifter Yoke	1	M-2426	M-2426
4	Swivel Stud	2	M-2440	M-2440
5	Socket Set Screw Half Dog Point #10-24 x 5/16	2	AA-634	AA-634
6	Spring	2	L-592	L-592
7	Socket Set Screw Cone Point 1/2-13 x 1"	4	AA-635	AA-635
8	Socket Set Screw Cup Point 1/4-20 x 1/4	7	A-601	A-601
9	Link	1	M-2428	M-2428
10	Socket Head Cap Screw 3/8-16 x 5"	2	AA-355	AA-355
11	Bracket	1	M-2427	M-2427
12	Retaining Ring	1	A-1238	A-1238
13	Stop Collar	1	M-2437	M-2437
14	Lock Nut	1	M-2435	M-2435
15	Ball Bearing	1	M-2445	M-2445
16	Sleeve	1	M-2433	M-2433
17	Socket Head Cap Screw #10-32 x 3/8	4	AA-414	AA-414
18	Spindle Adapter	1	KB-464	KB-464
19	Key 1/8 Sq. x 2" Long	1	A-941	A-941
20	Draw Bar Tube	1	M-2432	M-2432
21	Bushing	1	M-2447	M-2447
22	Hollow Lock Screw 5/16-18 x 5/32	6	AA-601	AA-601
23	Socket Set Screw Half Dog Point 5/16-18 x 1/4	3	AA-632	AA-632
24	Clutch Cone	1	M-2434	M-2434
25	Brass Plug	3	8005-26	8005-26
26	Brass Plug	7	L-776	L-776
27	Adapter Key	1	S-1150	S-1150
28	Clutch Finger	3	M-2438	M-2438
29	Adjusting Finger	1	M-2439	M-2439
30	Cap	1	L-593	L-593
31	Spring	1	L-592	L-592
32	Clutch Finger Retainer	1	M-2436	M-2436
33	Dowel Pin 1/4 Dia. x 1" Long	3	A-856	A-856
34	Socket Set Screw Half Dog Point #10-32 x 1/4	1	AA-639	AA-639
35	Dowel Pin 3/16 Dia. x 1 1/4 Long	1	A-880	A-880
36	Socket Set Screw Cup Point 1/4-20 x 1/2	2	A-611	A-611
37	Rear Adapter	1	M-2429	M-2429
38	Spindle Nut	1	M-2446	M-2446

W-DRIVE ASSEMBLY

Ref. No.	S & M Part No.	Description	Quantity
1	U-139	Collar	2
2	A-618	Socket Set Screw 3/8-16 x 3/8	2
3	A-607	Socket Set Screw 3/8-16 x 5/8	2
4	A-201	Steel Washer	9
5	A-203	Lockwasher	13
6	A-317	Hex. Head Cap Screw 3/8-16 x 1"	9
7	AA-2046	Tachometer Generator	1
8	A-1046	Alemite Fitting 90°	2
9	AA-1155	Pillow Block	2
10	A-1862	Tirex Cable	1
11	UW-2211	Generator Bracket	1
12	UW-2119	Jackshaft Frame	1
13	UW-2212	Generator Pulley	1
14	A-1581	Rubber Cord Belt	1
15	U-1900	Support Shaft	1
16	A-905	Hi-Pro Key	2
17	UW-2120	Jackshaft	1
18	AA-1524	Sheave Assembly	2
19	A-606	Socket Set Screw 5/16-18 x 1/2	2
20	A-645	Socket Set Screw 1/4-20 x 3/4	1
21	UW-1977	Jackshaft Eye Bolt	1
22	A-601	Socket Set Screw 1/4-20 x 1/4	1
23	A-100	Hex Jam Nut	5
24	AA-403	Hex. Head Cap Screw	1
25	A-1740	Micro Switch	2
26	UW-2075	Stud	4
27	A-925	Square Key	2
28	1613W	Lockwasher	4
29	1614W	Hex. Head Cap Screw	4
30	UW-2117	Micro Switch Stop	2
31	A-101	Hex Jam Nut	2
32	AS-UW-2076	Extension Screw Assembly	1
33	AS-1620W	Output Shaft Assembly	1
34	AA-392	Flat Hd. Machine Screw #2-56 x 1/4	3
35	1644-W	Shifting Spacer	1
36	AS-1602-W	Input Shaft Assembly	1
37	T-1941-1	Headstock Cover	1
38	AA-2043	Simpson Tachometer	1
39	AA-1526	Sheave Assembly	1
40	BLO-47W	Hex. Head Cap Screw	1
41	1628-W	Spring	1
42	3B-1059W	Spring Housing	1
43	3B-1060-W	Retainer	1
44	AS-1626W	Jackshaft Assembly	1
45	AA-1562	"B" Belt For Variable Drive	2
46	3B-1040W	Spacer Block	4
47	A-145	Stop Nut	2
48	1649W	Cam Bar Strap	2
49	1659W	Lockwasher	5
50	1653-W	Hex. Head Cap Screw	4
51	1647W	Shifting Plate	1
52	A-928	Square Key	1
53	AS-1642-W	Cam Roller Assembly	1
54	1646W	Snap Ring	1
55	A-240	Lockwasher	2
56	A-159	Hex. Jam Nut	4
57	M-2066	Bracket	1
58	AA-1527	Sheave Assembly	1
59	5L-270	V-Belt	2
60	A-319	Hex Hd. Cap Screw 1/4-20 x 1"	4
61	A-215	Washer	4
62	A-205	Lockwasher	4
63	A-105	Hex Jam Nut	4
64	A-1615	Geared Motor	1
65	8014-56	12 Tooth Sprocket	1
66	1685-W	Base	1
67	A-611	Socket Set Screw 1/4-20 x 1/2	1
68	UW-2081	24 Tooth Sprocket	1
69	AA-2018	Roller Chain	1
70	A-937	Square Key	1
71	AA-624	Socket Set Screw #6-32 x 3/16	1
72	UW-2098R	Adjustable Support Screw	2
73	UW-2099	Shaft	3
74	A-643	Socket Set Screw 5/16-18 x 1/4	8
75	11239-1	Collar	6
76	4L-370	"V" Belt	2
77	A-613	Socket Set Screw 5/16-18 x 5/16	6
78	UW-2098F	Adjustable Support Screw	2
79	AS-UW-1975-1	Eye Bolt Assembly	2
80	A-1549	Motor Pulley	1
81	AA-601	Socket Set Screw 5/16-18 x 5/32	1
82	UW-1946-1	Motor Bracket	2
83	A-106	Hex. Jam Nut	6
84	A-208	Washer	6
85	A-928	Square Key	1
86	A-306	Hex. Hd. Cap Screw 3/8-16 x 1 1/2	4
87		Motor	1

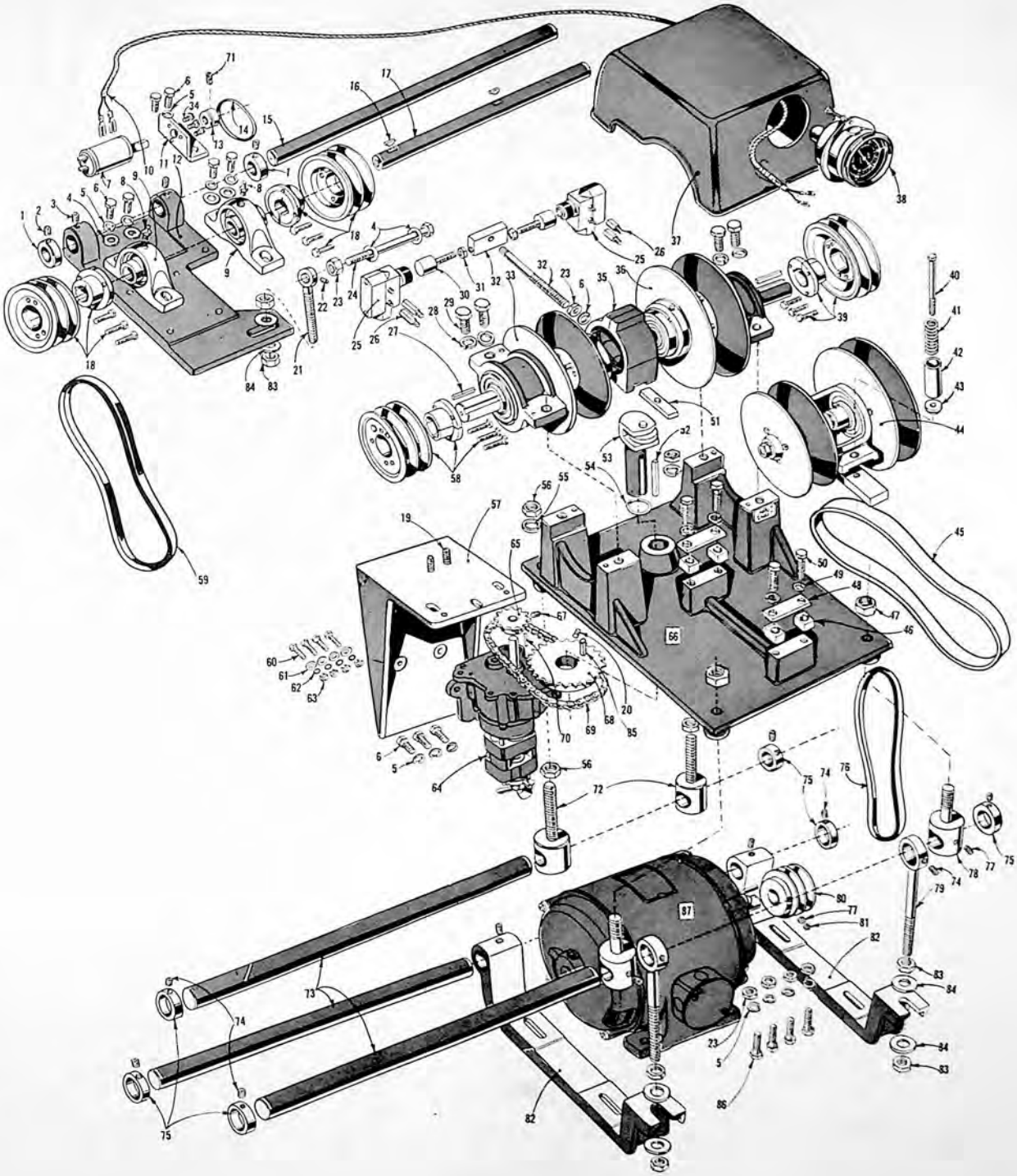

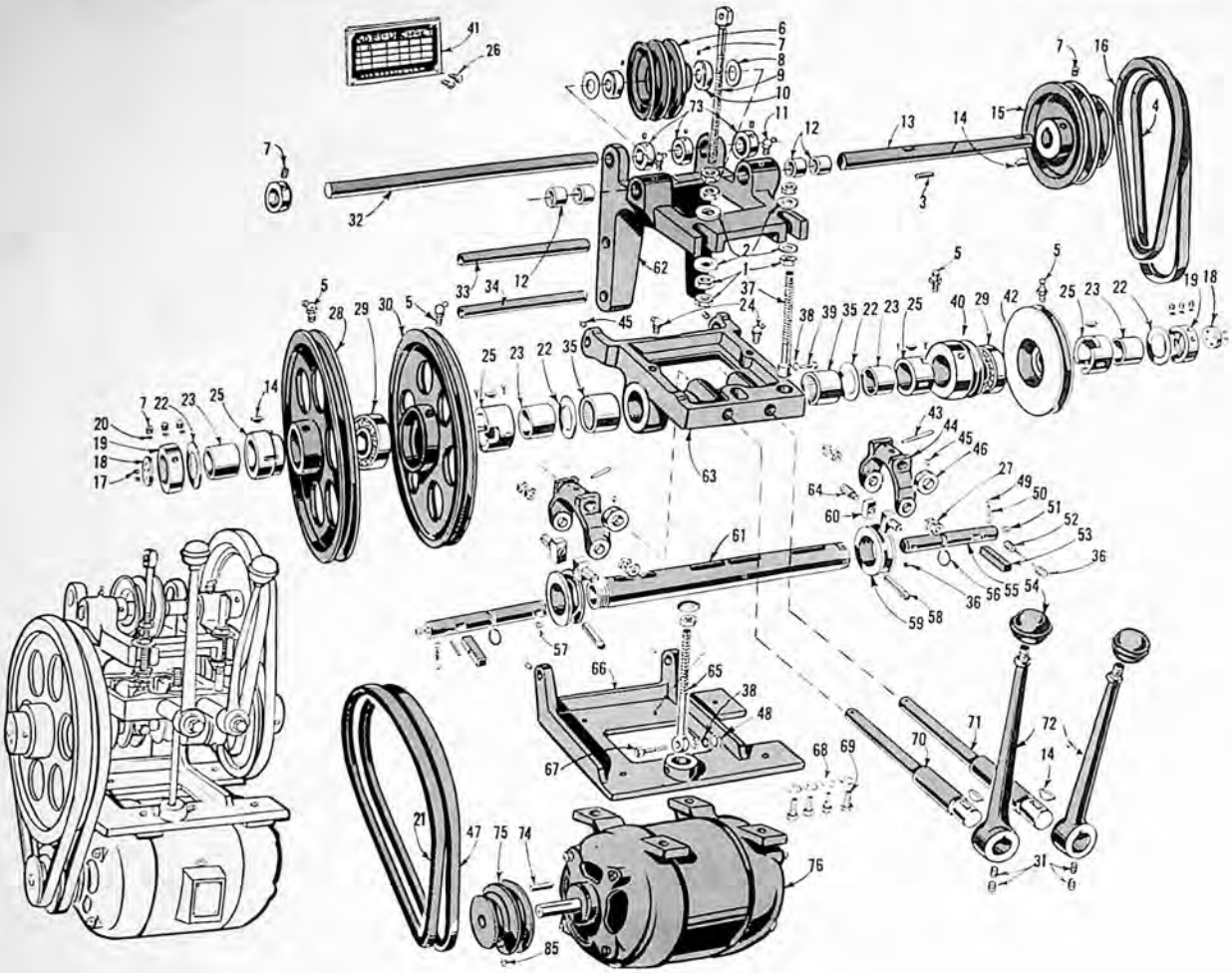

U-DRIVE ASSEMBLY

Ref. No.	S & M Part No.	Description	Quantity
1	A-106	Hex Jam Nut	6
2	A-208	Steel Washer	6
3	A-912	Square Key	1
4	5L-330	V Belt	1
5	A-1009	Alemite Fitting	4
6	AA-1523	"V" Belt Pulley	1
7	A-618	Socket Set Screw 3/8-16 X 3/8	9
8	UE-130	Fibre Washer	2
9	UE-1909	Support Screw	1
10	UE-409	Stop Collar	2
11	A-1044	Alemite Fitting	2
12	A-1100	Torrington Needle Bearing	4
13	U-132	Upper Shaft	1
14	A-903	Hi-Pro Key	7
15	U-645-1	Upper Right Sheave	1
16	5L-310	V-Belt	1
17	A-601	Socket Set Screw 1/4-20 x 1/4	4
18	U-122	Threaded Lock Plate	2
19	U-121	Take-Up Nut	2
20	U-155	Plug	6
21	5L-460	V-Belt	1
22	U-120	Fibre Washer	4
23	AA-1329	Oilite Bearing	4
24	A-1032	Alemite Fitting	2
25	U-173	Clutch Bushing	4
26	A-852	#O Drive Stud	6
27	A-107	Hex. Jam Nut	4
28	U-150-1	Left Sheave	1
29	AA-1100	Torrington Needle Bearing	2
30	U-149-1	Clutch Sheave	1
31	A-613	Socket Set Screw 5/16-18 x 5/16	4
32	U-1900	Support Shaft	1
33	U-176	Lower Base Shaft	1
34	U-129	Motor Base Shaft	1
35	A-1101	Torrington Needle Bearing	2
36	AA-600	Socket Set Screw 1/4-20 x 1/8	4
37	U-138	Lower Support Screw	1
38	A-200	Lockwasher	1
39	A-349	Hex Hd. Cap Screw 5/16-18 x 1 3/4	1
40	U-148-1	Clutch Sheave	1
41	U-1915	Speed Chart	1
42	U-147-1	Clutch Sheave	1
43	A-802	#3 Taper Pin	2
44	U-103X-1	Shifter Fork	2
45	A-605	Socket Set Screw	8
46	U-140	Collar	2
47	5L-470	V-Belt	1
48	A-101	Hex Jam Nut	2
49	A-1400	Steel Ball	4
50	U-640	Spring	2
51	A-1405	Steel Ball	2
52	A-623	Socket Set Screw	4
53	U-126	Drive Pin	2
54	10010	Plastic Ball	2
55	U-125-2	Clutch Pin Rod	2
56	L-1816	Oil Ring	2
57	A-611	Socket Set Screw 1/4-20 x 1/2	2
58	U-127	Pin For Clutch	2
59	U-123	Shifter Collar	2
60	U-1925-1	ClutchShoe	4
61	U-116-1	Main Drive Shaft	1
62	U-100	Main Bracket	1
63	U-101	Lower Bracket	1
64	9060-57	Screw For Shifter Shoe	4
65	U-137	Support Screw	1
66	U-652	Motor Base	1
67	A-350	Hex Hd. Cap Screw 5/16-18 x 2"	1
68	A-209	Washer	4
69	A-344	Hex Hd. Cap Screw 5/16-18 x 1 1/4"	4
70	U-1901	Short Clutch Handle Shaft	1
71	U-1902	Shifter Fork Shaft Long	1
72	U-104	Shift Lever	2
73	U-139	Collar	4
74		Square Key For Motor	1
75	U-151-3	Motor Pulley 3/4 Bore	
	U-151-4	Motor Pulley 7/8 Bore	1
76		Motor	1
77		Square Key For Motor	1

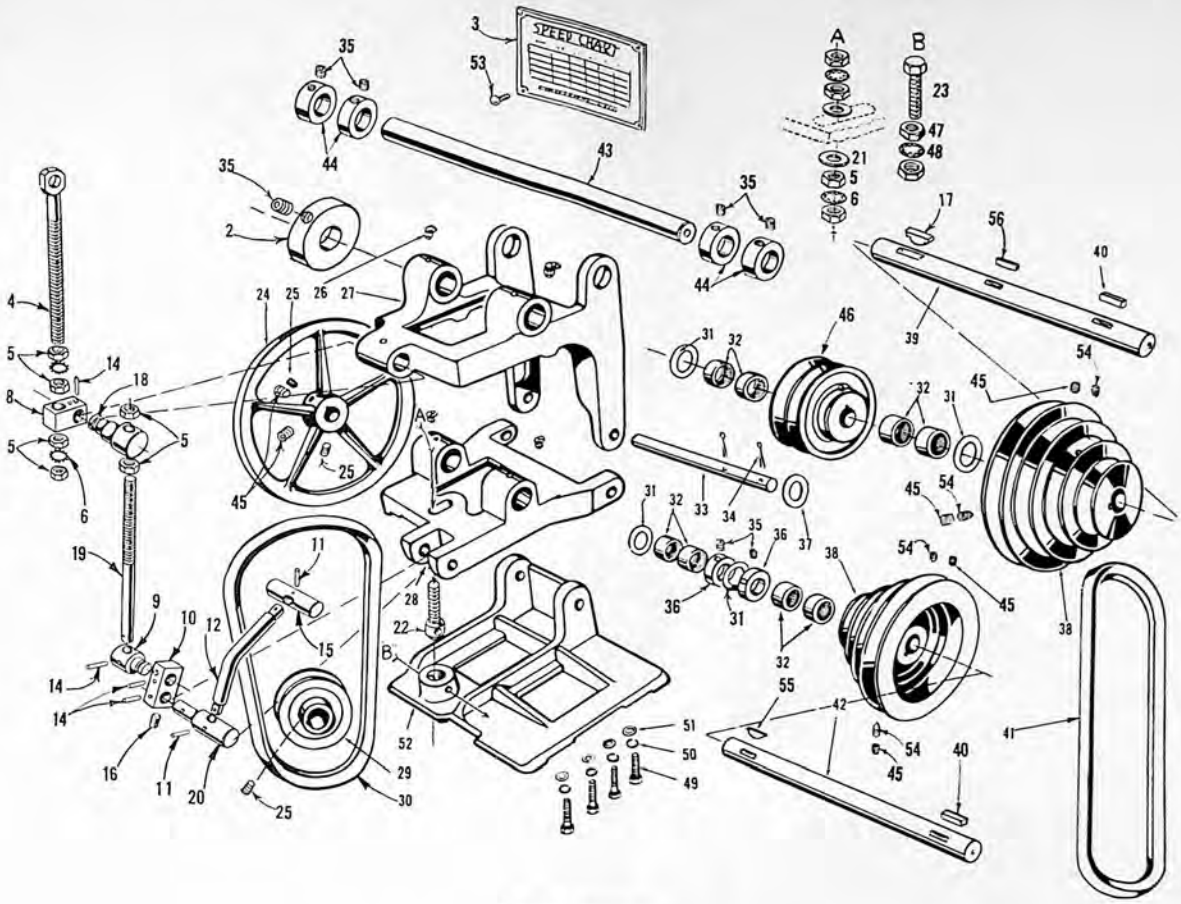

E-DRIVE ASSEMBLY

Ref. No.	S & M Part No.	Description	Quantity
1			
2	E-2144	Balancing Disc	1
3	E-1911	Speed Chart	1
4	UE-1909	Support Screw	1
5	A-106	Hex Jam Nut	10
6	A-207	Lockwasher	4
7			
8	E-983-1	Eccentric	1
9	E-2152	Stud	1
10	E-2153	Eccentric Arm	1
11	AA-861	Spring Pin 1/8 Dia. x 1" Lg.	2
12	E-2155	Shaft For Handle	1
13	A-912	Square Key	1
14	AA-857	Spring Pin 3/16 Dia. x 1" Lg.	4
15	E-2154	Lift Handle	1
16	A-601	Socket Set Screw 1/4-20 x 1/4	1
17	A-900	Woodruff Key	1
18	E-982-1	Eccentric Shaft	1
19	E-980-1	Adjusting Rod	1
20	E-2151	Shaft For Eccentric Arm	1
21	A-208	Washer	2
22	ELP-987	Support Screw	1
23	A-325	Hex. Hd. Cap Screw 5/16-18 x 2 1/4	1
24	1549-1	2 Step Pulley	1
25	A-643	Socket Set Screw 5/16-18 x 1/4	3
26	A-1044	Alemite Fitting	4
27	E-967-1	Main Bracket	1
28	E-968X-1	Lower Cone Bracket	1

Ref. No.	S & M Part No.	Description	Quantity
29	1547	Motor Pulley 3/4 Bore	
	1547-1	Motor Pulley 7/8 Bore	1
30	4L-310	V-Belt	1
31	UE-130	Fibre Washer	4
32	AAA-1117	Torrington Needle Bearing	8
33	E-972X	Shaft For Swivel Base	1
34	A-700	Cotter Pin	2
35	A-618	Socket Set Screw 3/8-16 x 3/8	7
36	UE-409	Stop Collar	2
37	E-1923	Fibre Washer	2
38	1551	4 Step Pulley	2
39	E-974X	Upper Shaft	1
40	A-913	Square Key	2
41	5L-280	V-Belt	1
42	E-975X	Lower Shaft	1
43	U-1900	Support Shaft	1
44	U-139	Collar	4
45	AA-601	Socket Set Screw 5/16-18 x 5/32	6
46	AA-1524	Double V Belt Sheave	1
47	A-101	Hex Jam Nut	2
48	A-200	Lockwasher	1
49	A-323	Hex Hd. Cap Screw 3/8-16 x 1 1/4	4
50	A-203	Lockwasher	4
51	A-209	Washer	4
52	XE-969	Motor Base	1
53	A-852	#O Drive Stud	6
54	A-606	Socket Set Screw 5/16-18 x 1/2	4
55	A-903	Hi-Pro Key	1

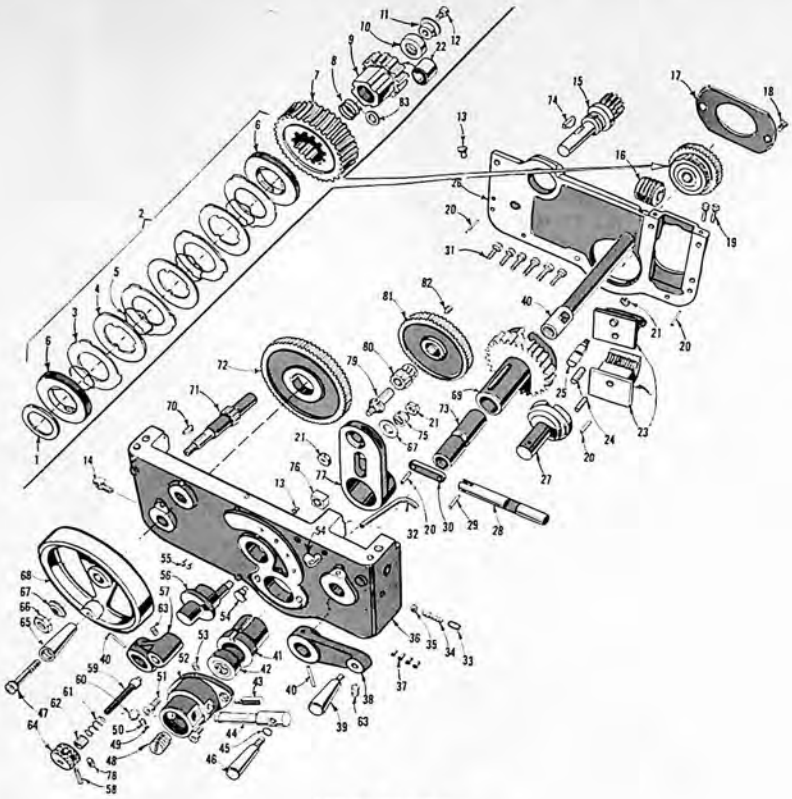

APRON ASSEMBLY

Ref. No.	S & M Part No.	Description	Quantity
1	L-1773	Washer	1
2	AS-2023	Clutch Pack	1
3	A-2063	Outer Disc	4
4	A-2064	Inner Disc	3
5	A-2065	Separator Spring	4
6	A-2066	Locking Plate	2
7	L-2026	40 Tooth Worm Gear	1
8	10739	Clutch Spring	1
9	L-2025	Clutch Spring	1
10	A-1108	Thrust Bearing	1
11	L-2035	Shoulder Cap	1
12	AA-379	Self Locking Screw 5/16-18 x 5/8	1
13	A-1040	Gits Oil Cup	3
14	A-1004	Gits Oil Cup	1
15	K-532-4	14 Tooth Rack Pinion	1
16	K-1682	Worm	1
17	L-2030	Retaining Plate	1
18	A-362	Flat Hd. Machine Screw 1/4-20 x 1/2	2
19	A-319	Hex. Hd. Cap Screw 1/4-20 x 1"	2
20	A-880	Dowel Pin 3/16 Dia. x 3/4 Lg.	4
21	A-101	Hex Jam Nut	3
22	AA-1324	Bronze Bearing	1
23	M-539X	Leadscrew Nut	1
24	AA-869	Dowel Pin 5/16 Dia. X 7/8 Lg.	2
25	K-538	Counter Lock Stud	1
26	M-194-2	Back Plate	1
27	K-536-7	Half Nut Cam	1
28	K-534	Safety Latch	1
29	L-1767	Pin	1
30	K-535	Quadrant Link	1
31	A-303	Hex. Hd. Cap Screw 1/4-20 x 3/4	6
32	K-511	Oil Pipe	1
33	A-602	Socket Set Screw 5/16-18 x 5/16	1
34	K-863	Spring	1
35	A-1400	Steel Ball	1
36	K-555-3	Apron Body	1
37	A-1001	Gits Oil Cup	4
38	L-10	Half Nut Crane	1
39	M-2413	Half Nut Handle	1
40	L-2028-2	Feed Clutch Shaft	1
41	L-2024	Friction Bushing	1
42	AA-1122	Thrust Bearing	1
43	L-2032	Stop Pin	1
44	L-2033	Cam For Clutch	1
45	A-235	Lockwasher	1
46	M-2412	Machine Handle	1
47	AA-435	Shoulder Screw	1
48	10776	Clutch Screw	1
49	L-776	Brass Plug	1
50	A-623	Socket Set Screw 1/4-20 x 3/16	1
51	A-395	Socket Hd. Cap Screw 1/4-20 x 1/2	2
52	L-2023	Clutch Cap	1
53	AA-614	Socket Set Screw 1/4-20 x 1/4	1
54	A-1055	Gits Oil Cup	2
55	A-858	#7 Drive Stud	2
56	K-551	Eccentric Stud	1
57	K-548	Quadrant Lever	1
58	AA-861	Spring Pin 1/8 Dia. x 3/4 Lg.	1
59	K-1125	Quadrant Lever Plunger	1
60	A-1218	Retaining Ring	2
61	K-546	Spring	1
62	K-98-1	Bushing	1
63	A-601	Socket Set Screw 1/4-20 x 1/4	3
64	K-543	Plunger Knob	1
65	10908	Machine Handle	1
66	A-138	Stop Nut	1
67	K-93	Washer	2
68	10909	Handwheel	1
69	L-1769	Friction Gear	1
70	A-900	Woodruff Key	1
71	K-542	Handwheel Shaft	1
72	K-23X-1	68 Tooth Rack Pinion Gear	1
73	L-2027	Sliding Bushing	1
74	A-905	Hi-Pro Key	1
75	K-550-1	Spring	1
76	K-549	Guide Block	1
77	K-552X	Apron Quadrant	1
78	A-647	Socket Set Screw #8-32 x 3/16	1
79	K-553-1	Quadrant Stud	1
80	K-19-1	Quadrant Pinion	1
81	K-18-1	Quadrant Gear	1
82	AA-860	Spring Pin 1/8 Dia. x 3/8 Lg.	1
83	10740	Steel Washer	1

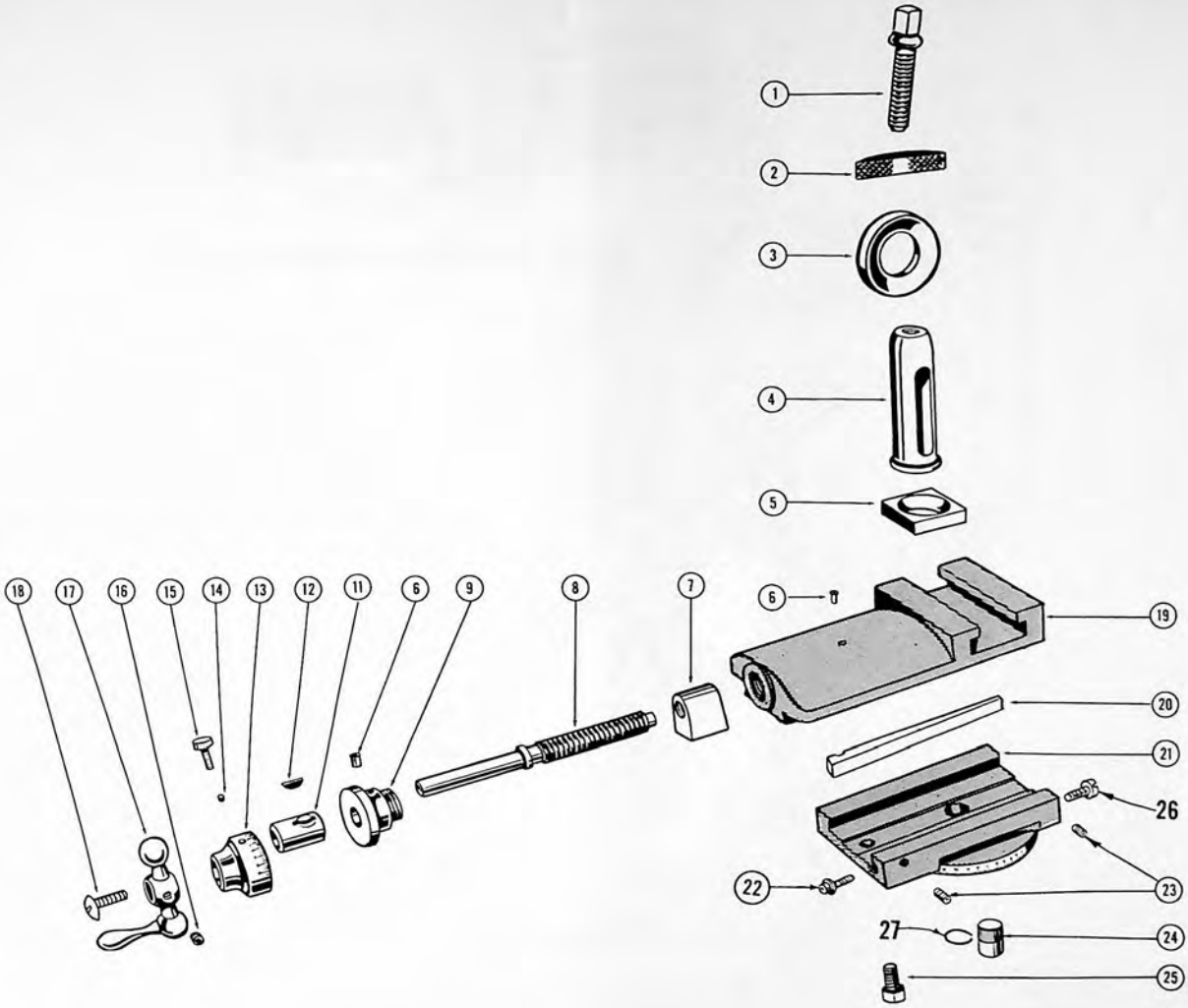

COMPOUND ASSEMBLY

Ref. No.	Description	S Part No.	M Part No.	Quantity
1	Tool Post Screw	K-451	K-451	1
2	Tool Post Wedge	XL-2173	M-2172	1
3	Tool Post Ring	S-2175	M-2176	1
4	Tool Post	K-140	K-254	1
5	Anchor Plate	K-255	K-255	1
6	Gits Oil Cup	A-1004	A-1004	1
7	Swivel Nut	M-257	M-257	1
8	Compound Screw	L-831	M-831	1
9	Compound Bushing	M-2105	M-2105	1
11	Micrometer Collar Bushing	L-228	L-228	1
12	Woodruff Key	A-900	A-900	1
13	Micrometer Collar	L-1827	L-1827	1
14	Brass Plug	MIL-L-853	MIL-L-853	1
15	Micrometer Collar Screw	K-458	K-458	1
16	Socket Set Screw 1/4-20 x 3/16	A-623	A-623	1
17	Ball Crank	11019	11019	1
18	Take Up Screw	L-991	L-991	1
19	Upper Slide	K-1183	M-135	1
20	Tapered Gib	K-1191	K-1191	1
21	Swivel	M-1184-1	M-1184-1	1
22	Gib Adjusting Screw	LKM-940	LKM-940	1
23	Socket Set Screw 1/4-20 x 1/4	AA-614	AA-614	2
24	Swivel Pin	11013-2	11013-2	1
25	Hex Hd. Cap Screw 3/8-16 x 5/8	A-466	A-466	1
26	Gib Adjusting Screw	LKM-940-2	LKM-940-2	1
27	Retaining Ring	A-1204	A-1204	1

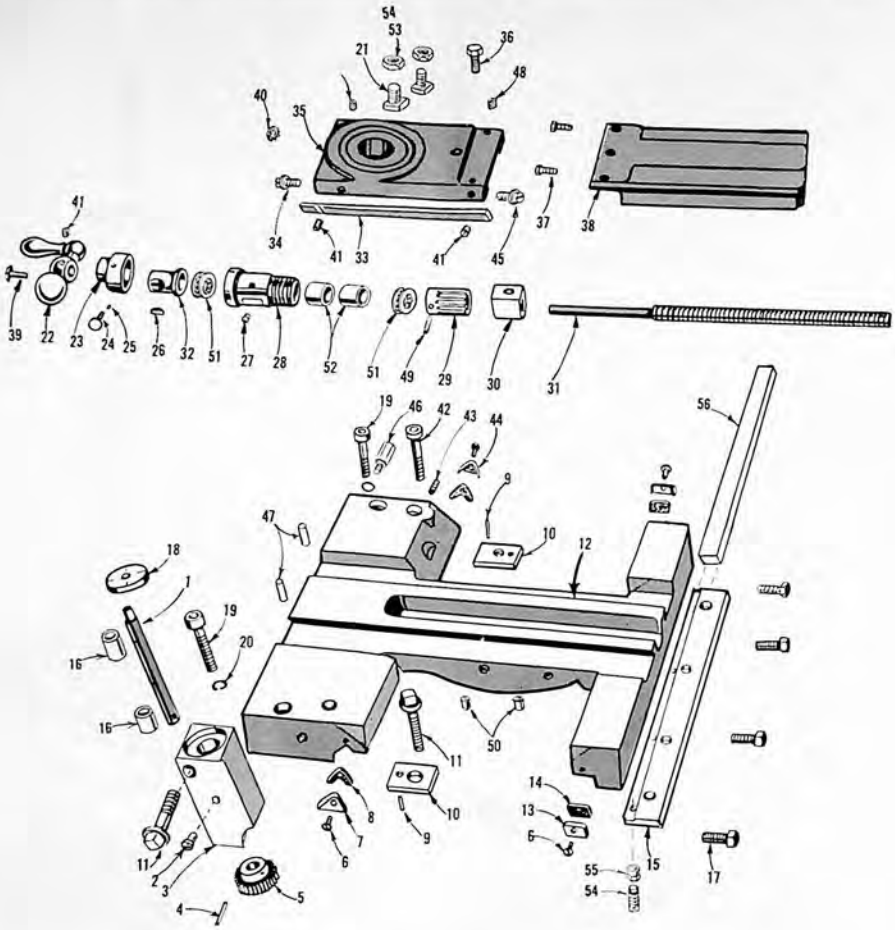

CARRIAGE ASSEMBLY

Ref. No.	Description	S Part No.	M Part No.	Quantity
1	Thread Indicator Shaft	K-891	K-891	1
2	Alemite Fitting	A-1077	A-1077	1
3	Thread Indicator Body	K-890-1	K-890-1	1
4	Socket Set Screw #10-32 x 1/4	A-646	A-646	1
5	Worm Wheel	M-192	M-192	1
6	Round Hd. Machine Screw	A-314	A-314	4
7	V-Wiper Retainer	LK-487-2	LK-487-2	1
8	V-Wiper Felt	K-1141-1	K-1141-1	2
9	#2 Groove Pin	A-857	A-857	2
10	Binding Block	M-1431-1	M-1431-1	2
11	Binding Screw	K-121	K-121	2
12	Carriage	M-1194-1	M-1194-1	1
13	Flat Wiper Retainer	LK-489	LK-489	2
14	Flat Wiper Felt	K-1142	K-1142	2
15	Back Clamp	M-2125	M-2125	1
16	Oilite Bearing	AA-1333	AA-1333	2
17	Hex Hd Cap Screw 3/8-16 x 1"	A-317	A-317	4
18	Thread Indicator Dial	K-892	K-892	1
19	Socket Hd Cap Screw 3/8-16 x 2"	A-426	A-426	2
20	Lockwasher	A-235	A-235	2
21	Swivel Binding Bolt	K-134	M-1186	2
22	Ball Crank	K-852	K-852	1
23	Micrometer Collar	MIL-L-126	MIL-L-126	1
24	Micrometer Collar Screw	K-458	K-458	1
25	Brass Plug	MIL-L-853	MIL-L-853	1
26	Woodruff Key	A-900	A-900	1
27	Gits Oil Cup	A-1004	A-1004	1
28	Crossfeed Screw Bushing	L-1829-1	L-1829-1	1
29	Crossfeed Pinion	K-124	K-124	1
30	Crossfeed Nut	M-128-1	M-128-1	1
31	Crossfeed Screw	L-830	L-830	1
32	Micrometer Collar Bushing	L-228	L-228	1
33	Gib For Lower Slide	M-1192	M-1192	1
34	Gib Adjusting Screw	LKM-940	LKM-940	1
35	Lower Slide	K-1185-1	M-1185-1	1
36	Screw For Crossfeed Nut	M-1818	M-1818	1
37	Truss Head Machine Screw	AA-371	AA-371	2
38	Chip Guard	M-235-1	M-235-1	1
39	Thrust Head Screw	L-991	L-991	1
40	Plug Button	A-513	A-513	1
41	Socket Set Screw 1/4-20 x 1/4	AA-614	AA-614	3
42	Socket Hd. Cap Screw 3/8-16 x 1 3/4	A-429	A-429	1
43	Socket Set Screw 5/16-18 x 1/2	A-606	A-606	2
44	V-Wiper Retainer	LK-487-1	LK-487-1	1
45	Gib Adjusting Screw	LKM-940-2	LKM-940-2	1
46	Carriage Stop	L-1845	L-1845	1
47	Dowel Pin	M-1919	M-1919	2
48	Slotted Set Screw #8-32 x 3/16	A-698	A-698	1
49	Spring Pin 1/8 Dia. x 7/8 Lg.	AA-852	AA-852	1
50	Gits Oil Cup	A-1003	A-1003	2
51	Thrust Bearing	AA-1160	AA-1160	2
52	Oilite Bearing	A-1371	A-1371	2
53	Hex Nut	A-100	A-100	2
54	Adjusting Screws	L-635C	L-635C	4
55	Lock Nut	L-636	L-636	4
56	Back Clamp Gib	M-2126	M-2126	1

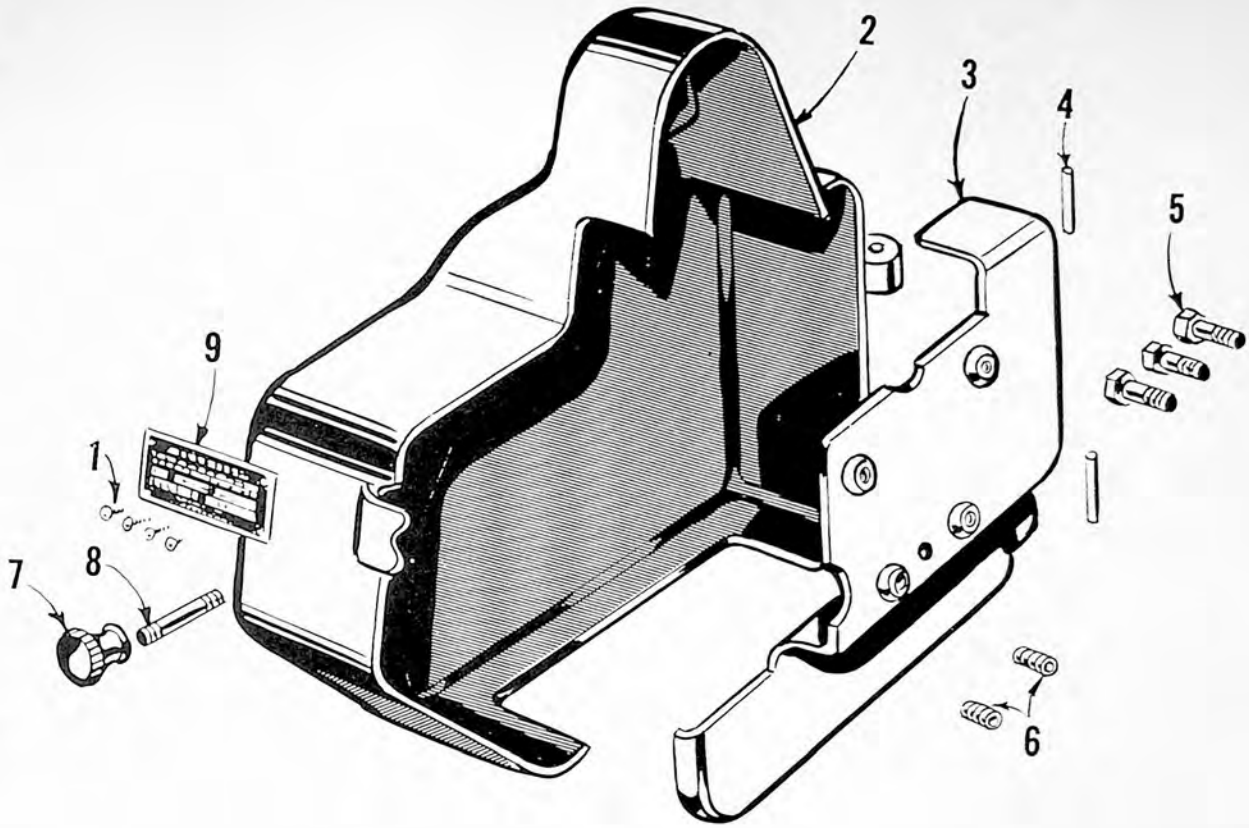

END GEAR GUARD ASSEMBLY

Ref. No.	Part No.	Description	Quantity
1	A-852	Round Head Drive Stud	4
2	M-1642	End Gear Guard Hinged Cover	1
3	K-1641	End Gear Guard Bracket	1
4	A-889	Groove Pin	2
5	A-303	Hex Head Cap Screw 1/4-20 x 3/4	3
6	A-656	Socket Set Screw	2
7	A-142	Knurled Brass Nut	1
8	L-1634	Stud	1
9	S-1163	Leveling Chart	1

AS-M-1642

Each Sheldon Lathe must pass this Rigid Test

TEST SHEET

SHELDON MACHINE CO. Inc.

Manufacturers of Sheldon Precision Lathes • Milling Machines • Shapers
4259 N. KNOX AVENUE • CHICAGO 41, ILLINOIS, U. S. A.

☐ ORDER NO _____ ☐ LATHE SERIAL NO _____ ☐ MOTOR SERIAL NO _____

NOTE: Before running lubricate lathe with No. 10 non-additive oil

	LIMIT	ACTUAL
BED LEVEL – TRANSVERSE DIRECTION	WHEN USING PRECISION LEVEL BOTH READINGS TO BE WITHIN .0003 IN 12 INCHES	
BED LEVEL – LONGITUDINAL DIRECTION	WHEN USING PRECISION LEVEL ALONG BED MAXIMUM READING TO BE WITHIN .001 IN 12 INCHES	
SPINDLE NOSE RUNOUT	INDICATOR READING 0 TO .0003	
CAM ACTION OF SPINDLE	INDICATOR READING 0 TO .0005	
SPINDLE TAPER RUNOUT	TOTAL INDICATOR READING AT END OF 12 INCH TEST BAR 0 TO .0006	
	AT END OF SPINDLE NOSE 0 TO .0001	
HEADSTOCK ALIGNMENT – VERTICAL	HIGH AT END OF 12 INCH TEST BAR 0 TO .0005	
HEADSTOCK ALIGNMENT – HORIZONTAL	AT END OF 12 INCH TEST BAR 0 TO .0003	
TAILSTOCK TAPER ALIGNMENT – VERTICAL (SPINDLE RETRACTED)	HIGH AT END OF 8 INCH TEST BAR 0 TO .0005	
TAILSTOCK TAPER ALIGNMENT HORIZONTAL (SPINDLE RETRACTED)	END OF 8 INCH TEST BAR 0 TO .0005	

	LIMIT	ACTUAL
TAILSTOCK TAPER ALIGNMENT – VERTICAL (SPINDLE EXTENDED)	HIGH AT END OF 8 INCH TEST BAR 0 TO .0005	
TAILSTOCK TAPER ALIGNMENT – HORIZONTAL (SPINDLE EXTENDED)	END OF 8 INCH TEST BAR 0 TO .0005	
VERTICAL ALIGNMENT OF HEAD & TAIL CENTERS	HIGH AT TAILSTOCK .0005 TO .001	
CROSS SLIDE ALIGNMENT	TO FACE HOLLOW OR CONCAVE ONLY ON 10 INCH DIAMETER 0 TO .0008	
FACE PLATE RUN OUT	ON FACE AT NOMINAL DIAMETER 0 TO .001	
CHUCK – RUN OUT	BAR TEST 3" FROM END OF JAW BAR DIA. SAME AS HOLE .001 SUBJECT TO CHUCK INACCURACY	
LATHE MUST TURN ROUND WITH WORK MOUNTED IN CHUCK	WITHIN .0003	
LATHE MUST TURN CYLINDRICAL WITH WORK MOUNTED IN CHUCK (3")	WITHIN .0003	
COLLET CHUCK – RUN OUT	ONE INCH FROM SPINDLE 0 TO .001	
BACK LASH ON CROSS FEED – SCREW ON COMPOUND REST SCREW	.004	

INSPECTED _____

APPROVED _____

DATE _____

Each Lathe must pass the 19 accuracy checks on this Test Sheet before leaving the factory. This individual Test Sheet is delivered with the lathe as a Guarantee that it is a true precision machine tool.

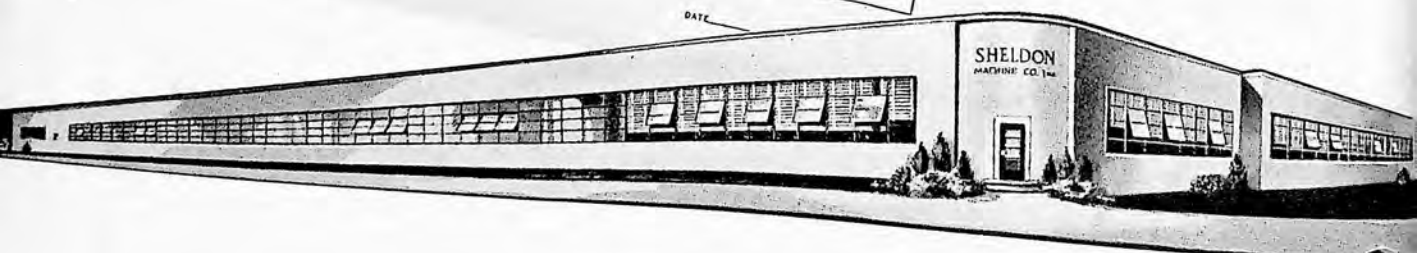

SHELDON MACHINE CO., Inc. 4258 N. KNOX AVE. • CHICAGO, ILLINOIS 60641, U.S.A.
TELEPHONE: (312) 685-1970 • CABLE ADDRESS: SHELDONCO