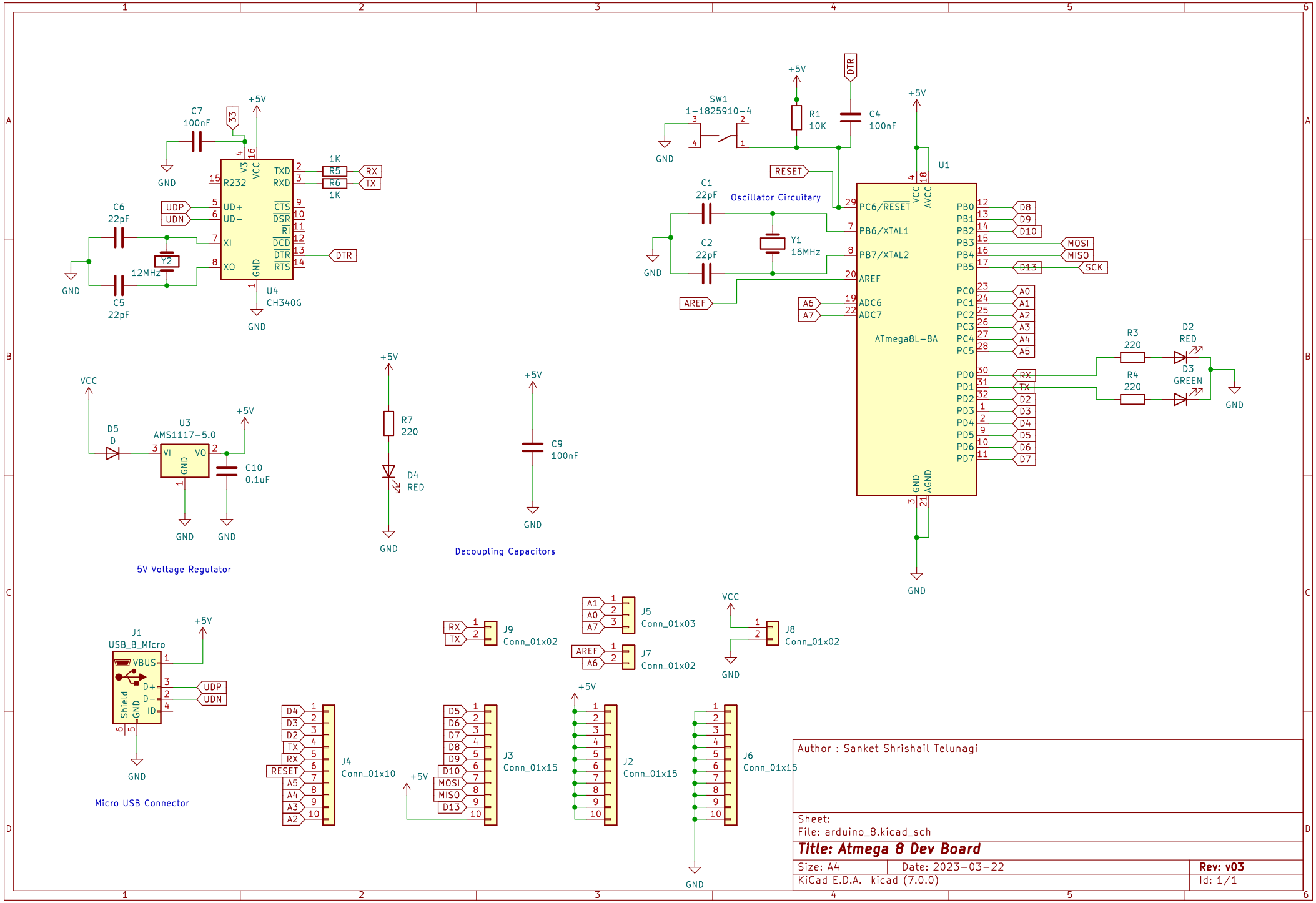
U4
CH340G
R232
V3
VCC
TXD
RXD
CTS
DSR
RI
DCD
DTR
RTS
UD+
UD−
XI
XO
GND
C7
100nF
C6
22pF
C5
22pF
Y2
12MHz
R5
R6
1K
RX
TX
UDP
UDN
33
+5V
U1
ATmega8L−8A
PC6/RESET
PB6/XTAL1
PB7/XTAL2
AREF
ADC6
ADC7
VCC
AVCC
GND
AGND
PB0
PB1
PB2
PB3
PB4
PB5
PC0
PC1
PC2
PC3
PC4
PC5
PD0
PD1
PD2
PD3
PD4
PD5
PD6
PD7
MOSI
MISO
SCK
D13
SW1
1−1825910−4
R1
10K
C4
100nF
DTR
RESET
C1
22pF
C2
22pF
Y1
16MHz
Oscillator Circuitary
A6
A7
R3
220
R4
220
D2
RED
D3
GREEN
U3
AMS1117−5.0
VI
VO
D5
D
C10
0.1uF
R7
220
D4
RED
C9
100nF
Decoupling Capacitors
5V Voltage Regulator
J1
USB_B_Micro
VBUS
D+
D−
ID
Shield
Micro USB Connector
J9
Conn_01x02
J5
Conn_01x03
J7
Conn_01x02
J8
Conn_01x02
J4
Conn_01x10
J3
Conn_01x15
J2
Conn_01x15
J6
Conn_01x15
Author : Sanket Shrishail Telunagi
Sheet:
File: arduino_8.kicad_sch
Title: Atmega 8 Dev Board
Size: A4
Date: 2023−03−22
Rev: v03
KiCad E.D.A. kicad (7.0.0)
Id: 1/1