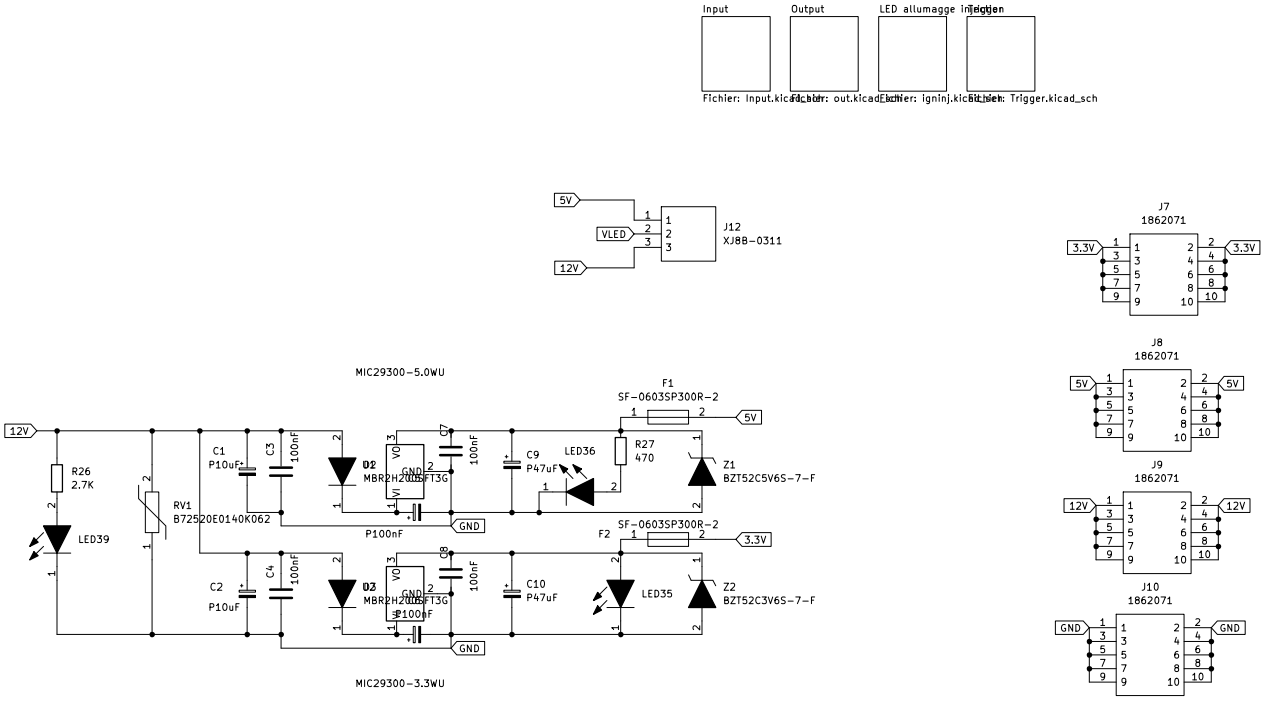
Input
Fichier: Input.kicad_sch
Output
Fichier: out.kicad_sch
LED allumagge injection
Fichier: igninj.kicad_sch
Trigger
Fichier: Trigger.kicad_sch
5V
VLED
12V
J12
XJ8B-0311
J7
1862071
3.3V
J8
1862071
5V
J9
1862071
12V
J10
1862071
GND
MIC29300-5.0WU
F1
SF-0603SP300R-2
12V
R26
2.7K
LED39
RV1
B72520E0140K062
C1
P10uF
C3
100nF
D2
MBR2H200SFT3G
VO
GND
VI
C7
100nF
P100nF
C9
P47uF
LED36
R27
470
Z1
BZT52C5V6S-7-F
GND
F2
SF-0603SP300R-2
3.3V
C2
P10uF
C4
100nF
D3
MBR2H200SFT3G
C8
100nF
P100nF
C10
P47uF
LED35
Z2
BZT52C3V6S-7-F
MIC29300-3.3WU

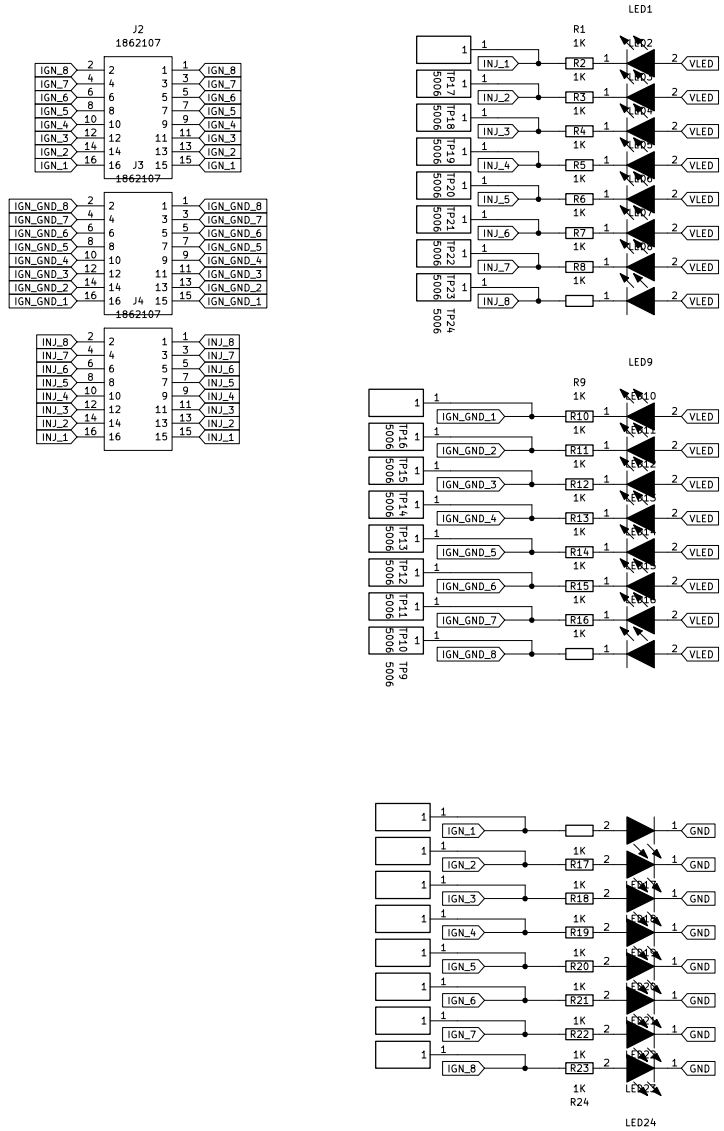
J2
1862107
IGN_8
IGN_7
IGN_6
IGN_5
IGN_4
IGN_3
IGN_2
IGN_1
J3
1862107
IGN_GND_8
IGN_GND_7
IGN_GND_6
IGN_GND_5
IGN_GND_4
IGN_GND_3
IGN_GND_2
IGN_GND_1
J4
1862107
INJ_8
INJ_7
INJ_6
INJ_5
INJ_4
INJ_3
INJ_2
INJ_1
LED1
R1
1K
R2
R3
R4
R5
R6
R7
R8
TP17 5006
TP18 5006
TP19 5006
TP20 5006
TP21 5006
TP22 5006
TP23 5006
TP24 5006
VLED
LED9
R9
R10
R11
R12
R13
R14
R15
R16
TP16 5006
TP15 5006
TP14 5006
TP13 5006
TP12 5006
TP11 5006
TP10 5006
TP9 5006
GND
R17
R18
R19
R20
R21
R22
R23
R24
LED24

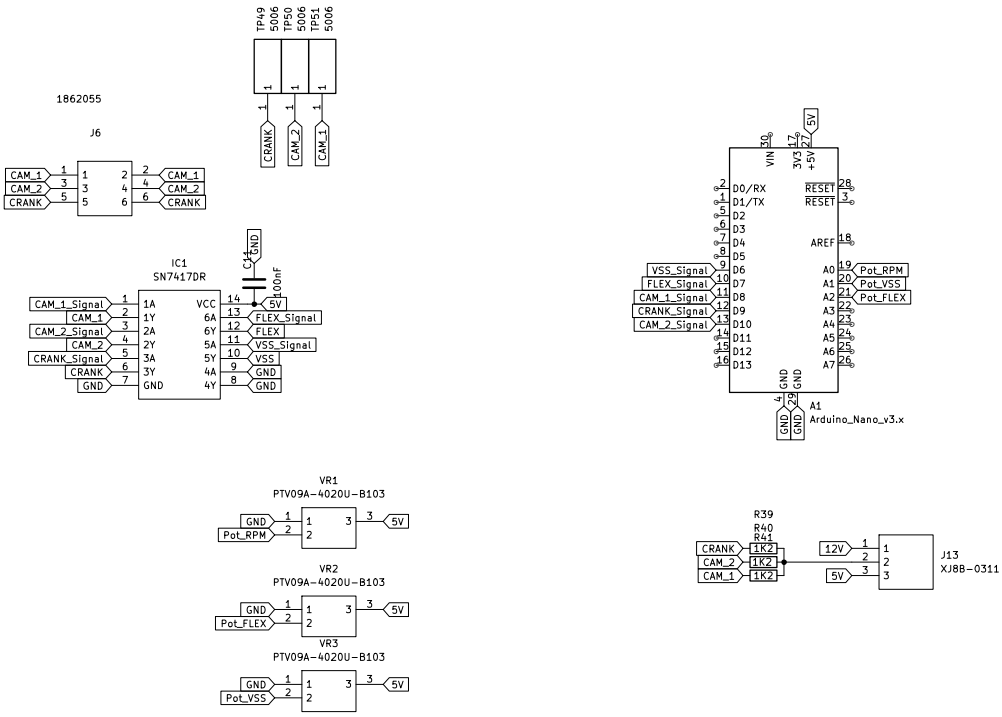
TP49
5006
TP50
5006
TP51
5006
CRANK
CAM_2
CAM_1
1862055
J6
CAM_1
CAM_2
CRANK
IC1
SN7417DR
C14
100nF
GND
5V
CAM_1_Signal
CAM_2_Signal
CRANK_Signal
1A
1Y
2A
2Y
3A
3Y
VCC
6A
6Y
5A
5Y
4A
4Y
FLEX_Signal
FLEX
VSS_Signal
VSS
VR1
PTV09A-4020U-B103
Pot_RPM
VR2
PTV09A-4020U-B103
Pot_FLEX
VR3
PTV09A-4020U-B103
Pot_VSS
VIN
3V3
+5V
D0/RX
D1/TX
D2
D3
D4
D5
D6
D7
D8
D9
D10
D11
D12
D13
RESET
AREF
A0
A1
A2
A3
A4
A5
A6
A7
A1
Arduino_Nano_v3.x
R39
R40
R41
1K2
12V
J13
XJ8B-0311

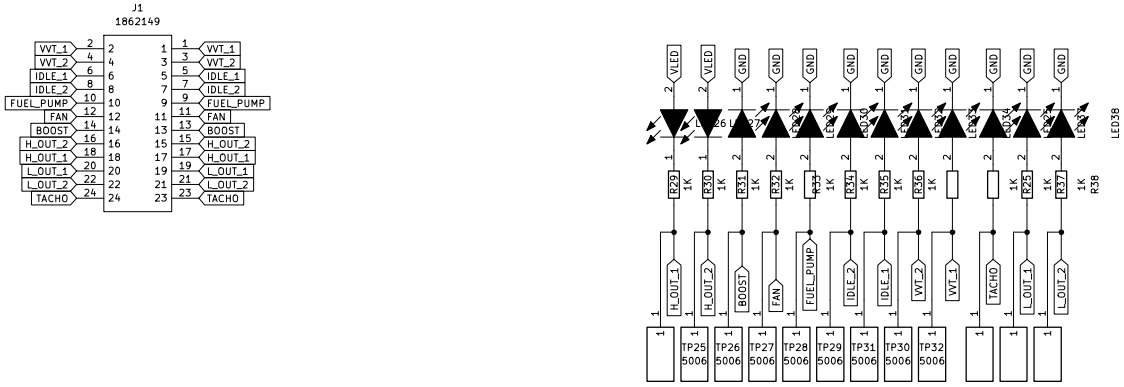
J1
1862149
VVT_1
VVT_2
IDLE_1
IDLE_2
FUEL_PUMP
FAN
BOOST
H_OUT_2
H_OUT_1
L_OUT_1
L_OUT_2
TACHO
VLED
GND
LED26
LED27
LED28
LED29
LED30
LED31
LED32
LED33
LED34
LED35
LED36
LED37
LED38
R29
R30
R31
R32
R33
R34
R35
R36
R37
1K
H_OUT_1
H_OUT_2
BOOST
FAN
FUEL_PUMP
IDLE_2
IDLE_1
VVT_2
VVT_1
TACHO
L_OUT_1
L_OUT_2
TP25 5006
TP26 5006
TP27 5006
TP28 5006
TP29 5006
TP31 5006
TP30 5006
TP32 5006

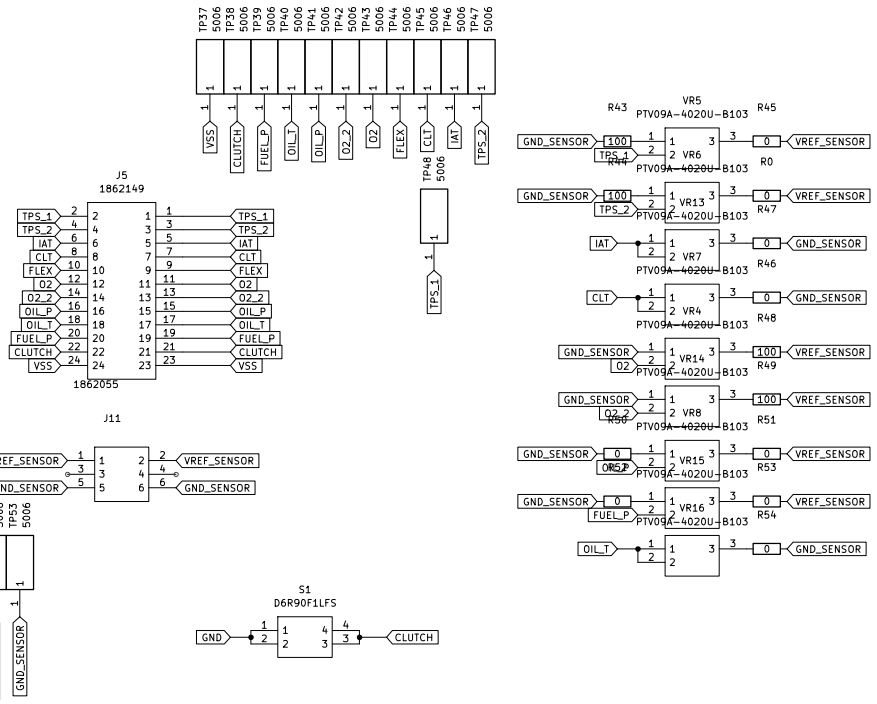
TP37 5006
TP38 5006
TP39 5006
TP40 5006
TP41 5006
TP42 5006
TP43 5006
TP44 5006
TP45 5006
TP46 5006
TP47 5006
VSS
CLUTCH
FUEL_P
OIL_T
OIL_P
O2_2
O2
FLEX
CLT
IAT
TPS_2
TP48 5006
TPS_1
J5
1862149
1862055
J11
VREF_SENSOR
GND_SENSOR
TP52 5006
TP53 5006
S1
D6R90F1LFS
GND
CLUTCH
VR5
PTV09A-4020U-B103
R43
R45
R44
R0
R47
R46
R48
R49
R50
R51
R52
R53
R54
VR6
VR13
VR7
VR4
VR14
VR8
VR15
VR16
100
0