✅ 1. Project Title

Regulated DC Power Supply Design using LT1086

✅ 2. What it is

This project involves designing a **regulated DC power supply** that converts AC input into a stable DC output using:

- Bridge Rectifier (1N4007 diodes)
- Filter Capacitor
- LT1086 Adjustable Voltage Regulator

The system converts **24V AC → ~14V DC regulated output**.

✅ 3. Why it is Needed

Electronic circuits require **stable DC voltage**.

Problems without regulation:

- Voltage fluctuations
- Noise and ripple
- Damage to sensitive components

👉 This design ensures:

- Stable output voltage
- Reduced ripple
- Reliable performance

✅ 4. Circuit Working (Simple Explanation)

Step-by-step:

1. **AC Input (24V AC)**

    - Given as sinusoidal input
2. **Bridge Rectifier (D1–D4)**
    - Converts AC → Pulsating DC
3. **Filter Capacitor (C1)**
    - Smooths the pulsating DC
    - Reduces ripple
4. **Voltage Regulator (LT1086)**
    - Maintains constant output voltage
5. **Resistor Network (R2, R3)**
    - Sets output voltage (~14V)

✅ 5. Design Calculation

Formula:

```
Vout = 1.25 × (1 + R2/R3)
```

Values used:

- R2 = 120Ω
- R3 = 1.24kΩ

👉 Output:

```
Vout ≈ 14V
```

✅ 6. Simulation Result

- Output Voltage: **~14V DC**
- Fast rise time
- Stable waveform with minimal ripple

📊 Simulation & Circuit Output

✅ 7. Problem Faced

- Initial ripple in output

- Incorrect capacitor value caused instability
- Voltage variation before regulation

✅ 8. Solution

- Optimized capacitor value for better filtering
- Used LT1086 for precise regulation
- Adjusted resistor values for exact output

✅ 9. Tools Used

- LTspice (Simulation)
- KiCad (PCB Design – if you design it)

✅ 10. Key Skills Demonstrated

- Power Electronics Design
- Circuit Analysis
- Voltage Regulation Techniques
- Simulation & Debugging

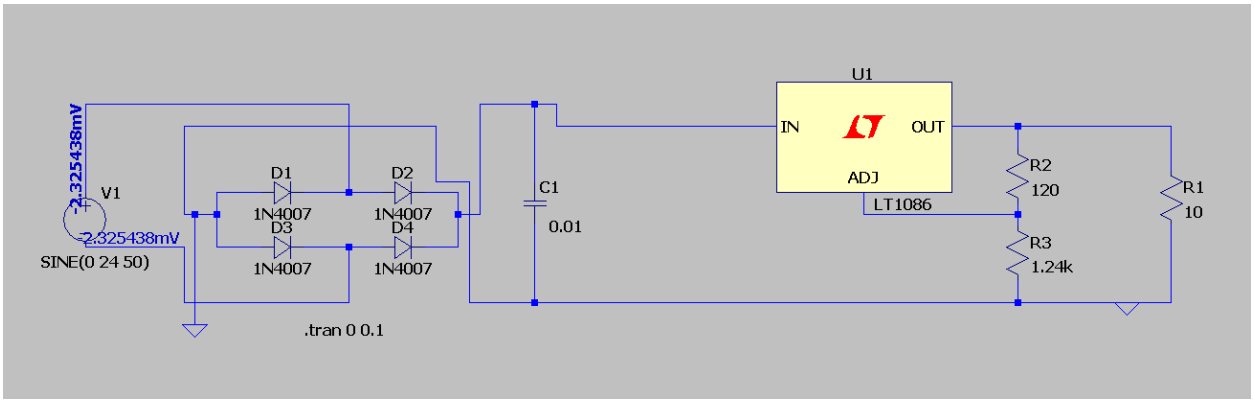

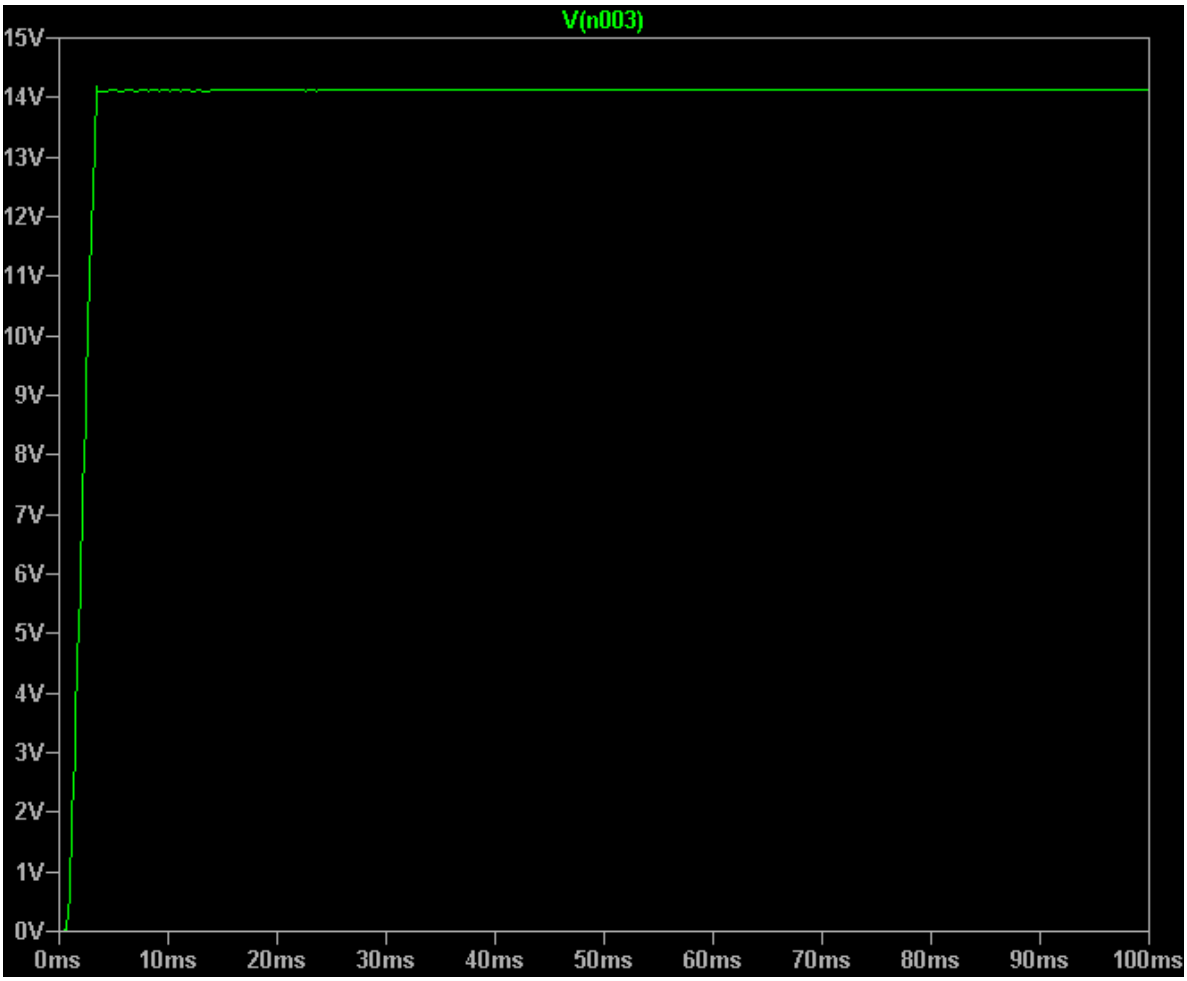
V(n003)
15V
14V
13V
12V
11V
10V
9V
8V
7V
6V
5V
4V
3V
2V
1V
0V
0ms
10ms
20ms
30ms
40ms
50ms
60ms
70ms
80ms
90ms
100ms