STM32F103x8
STM32F103xB

Medium-density performance line Arm®-based 32-bit MCU with 64 or 128 KB Flash, USB, CAN, 7 timers, 2 ADCs, 9 com. interfaces

Datasheet - production data

Features

Includes ST state-of-the-art patented technology

- Arm® 32-bit Cortex®-M3 CPU core
  - 72 MHz maximum frequency, 1.25 DMIPS/MHz (Dhrystone 2.1) performance at 0 wait state memory access
  - Single-cycle multiplication and hardware division
- Memories
  - 64 or 128 Kbytes of Flash memory
  - 20 Kbytes of SRAM
- Clock, reset and supply management
  - 2.0 to 3.6 V application supply and I/Os
  - POR, PDR, and programmable voltage detector (PVD)
  - 4 to 16 MHz crystal oscillator
  - Internal 8 MHz factory-trimmed RC
  - Internal 40 kHz RC
  - PLL for CPU clock
  - 32 kHz oscillator for RTC with calibration
- Low-power
  - Sleep, Stop and Standby modes
  - V_{BAT} supply for RTC and backup registers
- 2x 12-bit, 1 µs A/D converters (up to 16 channels)
  - Conversion range: 0 to 3.6 V
  - Dual-sample and hold capability
  - Temperature sensor
- DMA
  - 7-channel DMA controller
  - Peripherals supported: timers, ADC, SPIs, I^2Cs and USARTs
- Up to 80 fast I/O ports
  - 26/37/51/80 I/Os, all mappable on 16 external interrupt vectors and almost all 5 V-tolerant

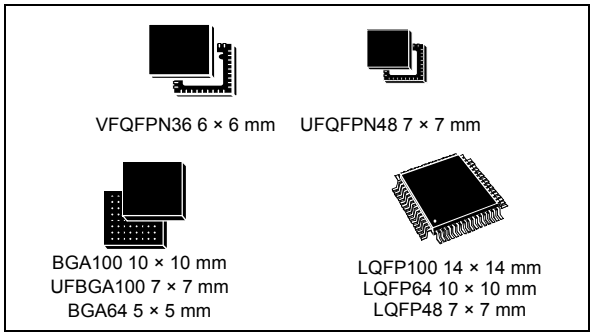

- Debug mode:
  - Serial wire debug (SWD) and JTAG interfaces
- Seven timers
  - Three 16-bit timers, each with up to 4 IC/OC/PWM or pulse counter and quadrature (incremental) encoder input
  - 16-bit, motor control PWM timer with dead-time generation and emergency stop
  - Two watchdog timers (independent and window)
  - SysTick timer 24-bit downcounter
- Up to nine communication interfaces
  - Up to two I^2C interfaces (SMBus/PMBus®)
  - Up to three USARTs (ISO 7816 interface, LIN, IrDA capability, modem control)
  - Up to two SPIs (18 Mbit/s)
  - CAN interface (2.0B Active)
  - USB 2.0 full-speed interface
- CRC calculation unit, 96-bit unique ID
- Packages are ECOPACK®

Table 1. Device summary

Reference	Part number
STM32F103x8	STM32F103C8, STM32F103R8 STM32F103V8, STM32F103T8
STM32F103xB	STM32F103RB STM32F103VB, STM32F103CB, STM32F103TB

This is information on a product in full production. www.st.com

1 Introduction 9

2 Description 9

2.1 Device overview 10

2.2 Full compatibility throughout the family 13

2.3 Overview 14

2.3.1 Arm® Cortex®-M3 core with embedded flash and SRAM 14

2.3.2 Embedded flash memory 14

2.3.3 CRC (cyclic redundancy check) calculation unit 14

2.3.4 Embedded SRAM 14

2.3.5 Nested vectored interrupt controller (NVIC) 14

2.3.6 External interrupt/event controller (EXTI) 15

2.3.7 Clocks and startup 15

2.3.8 Boot modes 15

2.3.9 Power supply schemes 15

2.3.10 Power supply supervisor 15

2.3.11 Voltage regulator 16

2.3.12 Low-power modes 16

2.3.13 DMA 17

2.3.14 RTC (real-time clock) and backup registers 17

2.3.15 Timers and watchdogs 17

2.3.16 I²C bus 19

2.3.17 Universal synchronous/asynchronous receiver transmitter (USART) . . 19

2.3.18 Serial peripheral interface (SPI) 19

2.3.19 Controller area network (CAN) 19

2.3.20 Universal serial bus (USB) 19

2.3.21 GPIOs (general-purpose inputs/outputs) 20

2.3.22 ADC (analog-to-digital converter) 20

2.3.23 Temperature sensor 20

2.3.24 Serial wire JTAG debug port (SWJ-DP) 20

3 Pinouts and pin description 21

4 Memory mapping 34

5 Electrical characteristics 35

5.1 Parameter conditions 35

5.1.1 Minimum and maximum values . . . 35
5.1.2 Typical values . . . 35
5.1.3 Typical curves . . . 35
5.1.4 Loading capacitor . . . 35
5.1.5 Pin input voltage . . . 35
5.1.6 Power supply scheme . . . 36
5.1.7 Current consumption measurement . . . 36
5.2 Absolute maximum ratings . . . 37
5.3 Operating conditions . . . 38
5.3.1 General operating conditions . . . 38
5.3.2 Operating conditions at power-up / power-down . . . 39
5.3.3 Embedded reset and power control block characteristics . . . 39
5.3.4 Embedded reference voltage . . . 40
5.3.5 Supply current characteristics . . . 40
5.3.6 External clock source characteristics . . . 50
5.3.7 Internal clock source characteristics . . . 54
5.3.8 PLL characteristics . . . 56
5.3.9 Memory characteristics . . . 56
5.3.10 EMC characteristics . . . 57
5.3.11 Absolute maximum ratings (electrical sensitivity) . . . 59
5.3.12 I/O current injection characteristics . . . 60
5.3.13 I/O port characteristics . . . 61
5.3.14 NRST pin characteristics . . . 66
5.3.15 TIM timer characteristics . . . 67
5.3.16 Communications interfaces . . . 68
5.3.17 CAN (controller area network) interface . . . 73
5.3.18 12-bit ADC characteristics . . . 74
5.3.19 Temperature sensor characteristics . . . 78

6 Package information . . . 79
6.1 Device marking . . . 79
6.2 VFQFPN36 package information (ZR) . . . 80
6.3 UFQFPN48 package information (A0B9) . . . 83
6.4 LFBGA100 package information (H0) . . . 85
6.5 LQFP100 package information (1L) . . . 88
6.6 UFBGA100 package information (A0C2) . . . 91

6.7 LQFP64 package information (5W) 94
6.8 TFBGA64 package information (R8) 97
6.9 LQFP48 package information (5B) 99
6.10 Thermal characteristics 102
6.10.1 Reference document 102
6.10.2 Selecting the product temperature range 103

7 Ordering information scheme 105

8 Important security notice 106

9 Revision history 107

List of tables

Table 1. Device summary . . . 1
Table 2. STM32F103xx medium-density device features and peripheral counts . . . 10
Table 3. STM32F103xx family . . . 13
Table 4. Timer feature comparison . . . 17
Table 5. Medium-density STM32F103xx pin definitions . . . 28
Table 6. Voltage characteristics . . . 37
Table 7. Current characteristics . . . 37
Table 8. Thermal characteristics . . . 37
Table 9. General operating conditions . . . 38
Table 10. Operating conditions at power-up / power-down . . . 39
Table 11. Embedded reset and power control block characteristics . . . 39
Table 12. Embedded internal reference voltage . . . 40
Table 13. Maximum current consumption in Run mode, code with data processing running from Flash . . . 41
Table 14. Maximum current consumption in Run mode, code with data processing running from RAM . . . 41
Table 15. Maximum current consumption in Sleep mode, code running from Flash or RAM . . . 43
Table 16. Typical and maximum current consumptions in Stop and Standby modes . . . 44
Table 17. Typical current consumption in Run mode, code with data processing running from Flash . . . 47
Table 18. Typical current consumption in Sleep mode, code running from Flash or RAM . . . 48
Table 19. Peripheral current consumption . . . 49
Table 20. High-speed external user clock characteristics . . . 50
Table 21. Low-speed external user clock characteristics . . . 51
Table 22. HSE 4-16 MHz oscillator characteristics . . . 52
Table 23. LSE oscillator characteristics (f_{LSE} = 32.768 kHz) . . . 53
Table 24. HSI oscillator characteristics . . . 54
Table 25. LSI oscillator characteristics . . . 55
Table 26. Low-power mode wakeup timings . . . 56
Table 27. PLL characteristics . . . 56
Table 28. Flash memory characteristics . . . 56
Table 29. Flash memory endurance and data retention . . . 57
Table 30. EMS characteristics . . . 58
Table 31. EMI characteristics for fHSE = 8 MHz and fHCLK = 48 MHz . . . 58
Table 32. EMI characteristics for fHSE = 8 MHz and fHCLK = 72 MHz . . . 59
Table 33. ESD absolute maximum ratings . . . 59
Table 34. Electrical sensitivities . . . 59
Table 35. I/O current injection susceptibility . . . 60
Table 36. I/O static characteristics . . . 61
Table 37. Output voltage characteristics . . . 64
Table 38. I/O AC characteristics . . . 65
Table 39. NRST pin characteristics . . . 66
Table 40. TIMx characteristics . . . 67
Table 41. I^2C characteristics . . . 68
Table 42. SCL frequency (f_{PCLK1} = 36 MHz, V_{DD_I2C} = 3.3 V) . . . 69
Table 43. SPI characteristics . . . 70

Table 44. USB startup time . . . 72
Table 45. USB DC electrical characteristics . . . 73
Table 46. USB: Full-speed electrical characteristics . . . 73
Table 47. ADC characteristics . . . 74
Table 48. R_{AIN} max for f_{ADC} = 14 MHz . . . 75
Table 49. ADC accuracy - Limited test conditions . . . 75
Table 50. ADC accuracy . . . 76
Table 51. TS characteristics . . . 78
Table 52. VFQFPN - 36 pin, 6x6 mm, 0.5 mm pitch very thin profile fine pitch quad flat package mechanical data . . . 81
Table 53. UFQFPN48 – Mechanical data . . . 84
Table 54. LFBGA100 – 100-ball low profile fine pitch ball grid array, 10 x 10 mm, 0.8 mm pitch, package mechanical data . . . 86
Table 55. LFBGA100 recommended PCB design rules (0.8 mm pitch BGA) . . . 87
Table 56. LQFP100 - Mechanical data . . . 89
Table 57. UFBGA100 - Mechanical data . . . 92
Table 58. UFBGA100 - Example of PCB design rules (0.5 mm pitch BGA) . . . 93
Table 59. LQFP64 - Mechanical data . . . 95
Table 60. TFBGA64 – 64-ball, 5 x 5 mm, 0.5 mm pitch, thin profile fine pitch ball grid array package mechanical data . . . 97
Table 61. TFBGA64 recommended PCB design rules (0.5 mm pitch BGA) . . . 98
Table 62. LQFP48 – Mechanical data . . . 100
Table 63. Package thermal characteristics . . . 102
Table 64. Document revision history . . . 107

List of figures

Figure 1. STM32F103xx performance line block diagram . . . 11
Figure 2. Clock tree . . . 12
Figure 3. STM32F103xx performance line LFBGA100 ballout . . . 21
Figure 4. STM32F103xx performance line LQFP100 pinout . . . 22
Figure 5. STM32F103xx performance line UFBGA100 pinout . . . 23
Figure 6. STM32F103xx performance line LQFP64 pinout . . . 24
Figure 7. STM32F103xx performance line TFBGA64 ballout . . . 25
Figure 8. STM32F103xx performance line LQFP48 pinout . . . 26
Figure 9. STM32F103xx performance line UFQFPN48 pinout . . . 26
Figure 10. STM32F103xx performance line VFQFPN36 pinout . . . 27
Figure 11. Memory map . . . 34
Figure 12. Pin loading conditions . . . 35
Figure 13. Pin input voltage . . . 35
Figure 14. Power supply scheme . . . 36
Figure 15. Current consumption measurement scheme . . . 36
Figure 16. Typical current consumption in Run mode versus frequency (at 3.6 V), code with data processing running from RAM, peripherals enabled . . . 42
Figure 17. Typical current consumption in Run mode versus frequency (at 3.6 V), code with data processing running from RAM, peripherals disabled . . . 42
Figure 18. Typical current consumption on V_{BAT} (RTC on) . . . 44
Figure 19. Typical current consumption in Stop mode, with regulator in Run mode . . . 45
Figure 20. Typical current consumption in Stop mode, with regulator in Low-power mode . . . 45
Figure 21. Typical current consumption in Standby mode . . . 46
Figure 22. High-speed external clock source AC timing diagram . . . 51
Figure 23. Low-speed external clock source AC timing diagram . . . 52
Figure 24. Typical application with an 8 MHz crystal . . . 53
Figure 25. Typical application with a 32.768 kHz crystal . . . 54
Figure 26. Standard I/O input characteristics - CMOS port . . . 62
Figure 27. Standard I/O input characteristics - TTL port . . . 62
Figure 28. 5 V tolerant I/O input characteristics - CMOS port . . . 63
Figure 29. 5 V tolerant I/O input characteristics - TTL port . . . 63
Figure 30. I/O AC characteristics definition . . . 66
Figure 31. Recommended NRST pin protection . . . 67
Figure 32. I^2C bus AC waveforms and measurement circuit . . . 69
Figure 33. SPI timing diagram - slave mode and CPHA = 0 . . . 71
Figure 34. SPI timing diagram - slave mode and CPHA = 1 . . . 71
Figure 35. SPI timing diagram - master mode . . . 72
Figure 36. USB timings: definition of data signal rise and fall time . . . 73
Figure 37. ADC accuracy characteristics . . . 76
Figure 38. Typical connection diagram using the ADC . . . 77
Figure 39. Power supply and reference decoupling (V_{REF+} not connected to V_{DDA}) . . . 77
Figure 40. Power supply and reference decoupling (V_{REF+} connected to V_{DDA}) . . . 78
Figure 41. VFQFPN - 36 pin, 6x6 mm, 0.5 mm pitch very thin profile fine pitch quad flat package outline . . . 80
Figure 42. VFQFPN - 36 pin, 6x6 mm, 0.5 mm pitch very thin profile fine pitch quad flat package recommended footprint . . . 82
Figure 43. UFQFPN48 – Outline . . . 83
Figure 44. UFQFPN48 – Footprint example . . . 85

Figure 45. LFBGA100 – 100-ball low profile fine pitch ball grid array, 10 x 10 mm, 0.8 mm pitch, package outline . . . 85
Figure 46. LFBGA100 – 100-ball low profile fine pitch ball grid array, 10 x 10 mm, 0.8 mm pitch, package recommended footprint . . . 86
Figure 47. LQFP100 - Outline(15) . . . 88
Figure 48. LQFP100 - Footprint example . . . 90
Figure 49. UFBGA100 - Outline(13) . . . 91
Figure 50. UFBGA100 - Footprint example . . . 93
Figure 51. LQFP64 - Outline(15) . . . 94
Figure 52. LQFP64 - Footprint example . . . 96
Figure 53. TFBGA64 – 64-ball, 5 x 5 mm, 0.5 mm pitch thin profile fine pitch ball grid array package outline . . . 97
Figure 54. TFBGA64 – 64-ball, 5 x 5 mm, 0.5 mm pitch, thin profile fine pitch ball grid array , recommended footprint . . . 98
Figure 55. LQFP48 – Outline(15) . . . 99
Figure 56. LQFP48 – Footprint example . . . 101
Figure 57. LQFP100 P_D max vs. T_A . . . 104

1 Introduction

This document provides the ordering information and mechanical device characteristics of the STM32F103x8 and STM32F103xB medium-density performance line microcontrollers. For more details on the whole STMicroelectronics STM32F103xx family, refer to *Section 2.2: Full compatibility throughout the family*.

The medium-density STM32F103xx datasheet must be read in conjunction with the low-, medium-, and high-density STM32F10xxx reference manual. For information on the device errata with respect to the datasheet and reference manual, refer to the STM32F103x8/B errata sheet (ES096). The errata sheet, reference manual, and flash programming manual are all available on the STMicroelectronics website *www.st.com*.

For information on the Arm®[a] Cortex®-M3 core refer to the Cortex®-M3 Technical Reference Manual, available from the www.arm.com website.

2 Description

The STM32F103xx medium-density performance line family incorporates the high-performance Arm® Cortex®-M3 32-bit RISC core operating at a 72 MHz frequency, high-speed embedded memories (Flash memory up to 128 Kbytes and SRAM up to 20 Kbytes), and an extensive range of enhanced I/Os and peripherals connected to two APB buses. All devices offer two 12-bit ADCs, three general purpose 16-bit timers plus one PWM timer, as well as standard and advanced communication interfaces: up to two I^2Cs and SPIs, three USARTs, an USB and a CAN.

The devices operate from a 2.0 to 3.6 V power supply. They are available in both the –40 to +85°C temperature range and the –40 to +105 °C extended temperature range. A comprehensive set of power-saving mode allows the design of low-power applications.

The STM32F103xx medium-density performance line family includes devices in six different package types: from 36 pins to 100 pins. Depending on the device chosen, different sets of peripherals are included, the description below gives an overview of the complete range of peripherals proposed in this family.

These features make the STM32F103xx medium-density performance line microcontroller family suitable for a wide range of applications such as motor drives, application control, medical and handheld equipment, PC and gaming peripherals, GPS platforms, industrial applications, PLCs, inverters, printers, scanners, alarm systems, video intercoms, and HVACs.

a. Arm is a registered trademark of Arm Limited (or its subsidiaries) in the US and/or elsewhere.

2.1 Device overview

Table 2. STM32F103xx medium-density device features and peripheral counts

Peripheral		STM32F103Tx		STM32F103Cx		STM32F103Rx		STM32F103Vx	
Flash - Kbytes		64	128	64	128	64	128	64	128
SRAM - Kbytes		20		20		20		20	
Timers	General-purpose	3		3		3		3	
	Advanced-control	1		1		1		1	
Communication	SPI	1		2		2		2	
	I^2C	1		2		2		2	
	USART	2		3		3		3	
	USB	1		1		1		1	
	CAN	1		1		1		1	
GPIOs		26		37		51		80	
12-bit synchronized ADC Number of channels		2 10 channels		2 10 channels		2 16 channels(1)		2 16 channels	
CPU frequency		72 MHz							
Operating voltage		2.0 to 3.6 V							
Operating temperatures		Ambient temperatures: -40 to +85 °C / -40 to +105 °C (see *Table 9*) Junction temperature: -40 to + 125 °C (see *Table 9*)							
Packages		VFQFPN36		LQFP48, UFQFPN48		LQFP64, TFBGA64		LQFP100, LFBGA100, UFBGA100	

1. On the TFBGA64 package only 15 channels are available (one analog input pin has been replaced by V_{REF+}).

Figure 1. STM32F103xx performance line block diagram

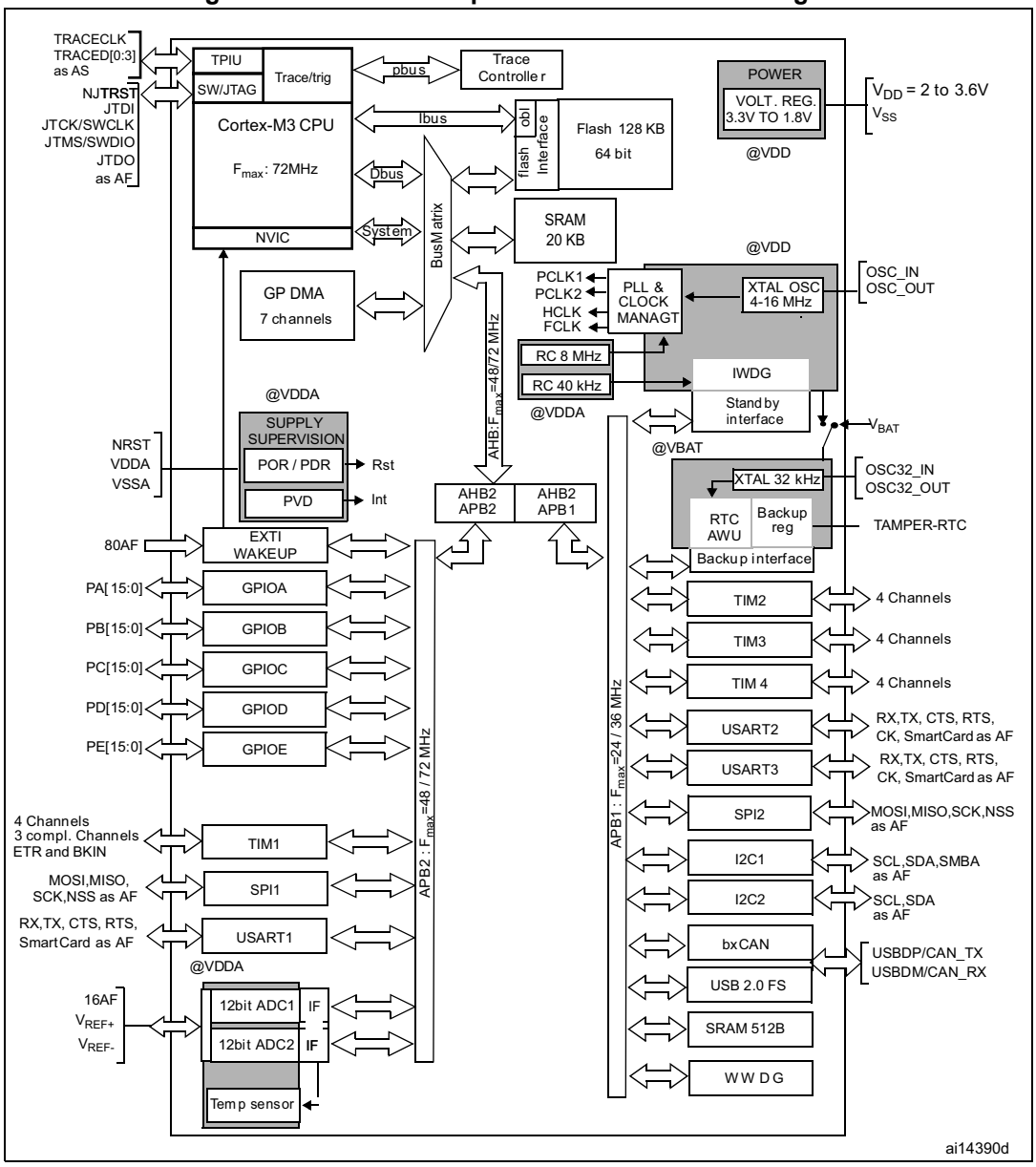

1. T_A = –40°C to +105°C (junction temperature up to 125°C).
2. AF = alternate function on I/O port pin.

Figure 2. Clock tree

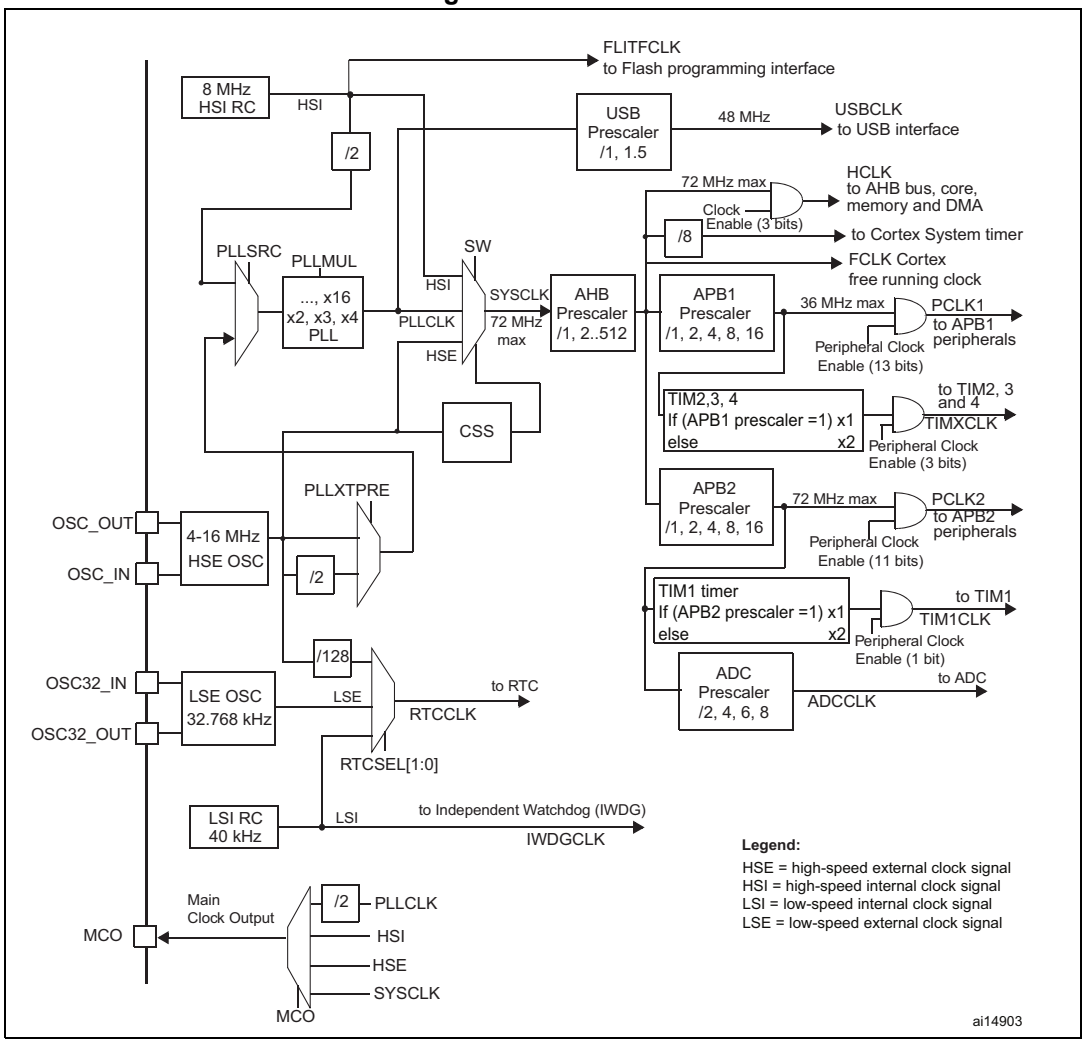

1. When the HSI is used as a PLL clock input, the maximum system clock frequency that can be achieved is 64 MHz.
2. For the availability of the USB function both HSE and PLL must be enabled, with USBCLK running at 48 MHz.
3. To have an ADC conversion time of 1 µs, APB2 must be at 14 MHz, 28 MHz, or 56 MHz.

2.2 Full compatibility throughout the family

STM32F103xx is a complete family whose members are fully pin-to-pin, software, and feature compatible. In the reference manual, STM32F103x4 and STM32F103x6 are identified as low-density devices, STM32F103x8 and STM32F103xB are referred to as medium-density devices, and STM32F103xC, STM32F103xD, and STM32F103xE are referred to as high-density devices.

Low- and high-density devices are an extension of the STM32F103x8/B devices; they are specified in the STM32F103x4/6 and STM32F103xC/D/E datasheets, respectively. Low-density devices feature lower flash memory and RAM capacities, and fewer timers and peripherals. High-density devices have higher flash memory and RAM capacities, and additional peripherals like SDIO, FSMC, I^2S, and DAC, while remaining fully compatible with the other members of the STM32F103xx family.

The STM32F103x4, STM32F103x6, STM32F103xC, STM32F103xD and STM32F103xE are a drop-in replacement for STM32F103x8/B medium-density devices, allowing the user to try different memory densities and providing a greater degree of freedom during the development cycle.

Moreover, the STM32F103xx performance line family is fully compatible with all existing STM32F101xx access line and STM32F102xx USB access line devices.

Table 3. STM32F103xx family

<table>
<tr><th rowspan="3">Pinout</th><th colspan="2">Low-density devices</th><th colspan="2">Medium-density devices</th><th colspan="3">High-density devices</th></tr>
<tr><th>16 KB Flash</th><th>32 KB Flash</th><th>64 KB Flash</th><th>128 KB Flash</th><th>256 KB Flash</th><th>384 KB Flash</th><th>512 KB Flash</th></tr>
<tr><th>6 KB RAM</th><th>10 KB RAM</th><th>20 KB RAM</th><th>20 KB RAM</th><th>48 KB RAM</th><th>64 KB RAM</th><th>64 KB RAM</th></tr>
<tr><td>144</td><td>-</td><td>-</td><td>-</td><td>-</td><td colspan="3" rowspan="3">5× USARTs
4× 16-bit timers, 2× basic timers
3× SPIs, 2× I^2Ss, 2× I2Cs
USB, CAN, 2× PWM timers
3× ADCs, 2× DACs, 1× SDIO
FSMC (100 and 144 pins)</td></tr>
<tr><td>100</td><td>-</td><td>-</td><td colspan="3" rowspan="4">3× USARTs
3× 16-bit timers
2× SPIs, 2× I^2Cs, USB, CAN, 1× PWM timer
2× ADCs</td></tr>
<tr><td>64</td><td colspan="2" rowspan="3">2× USARTs
2× 16-bit timers
1× SPI, 1× I^2C, USB, CAN, 1× PWM timer
2× ADCs</td></tr>
<tr><td>48</td><td>-</td><td>-</td><td>-</td></tr>
<tr><td>36</td><td>-</td><td>-</td><td>-</td></tr>
</table>

2.3 Overview

2.3.1 Arm® Cortex®-M3 core with embedded flash and SRAM

The Arm® Cortex®-M3 processor is the latest generation of Arm® processors for embedded systems. It has been developed to provide a low-cost platform that meets the needs of MCU implementation, with a reduced pin count and low-power consumption, while delivering outstanding computational performance and an advanced system response to interrupts.

The Arm® Cortex®-M3 32-bit RISC processor features exceptional code-efficiency, delivering the high-performance expected from an Arm® core in the memory size usually associated with 8- and 16-bit devices.

The STM32F103xx performance line family having an embedded Arm® core, it is compatible with all Arm® tools and software.

Figure 1 shows the general block diagram of the device family.

2.3.2 Embedded flash memory

64 or 128 Kbytes of embedded flash memory is available for storing programs and data.

2.3.3 CRC (cyclic redundancy check) calculation unit

The CRC (cyclic redundancy check) calculation unit is used to get a CRC code from a 32-bit data word and a fixed generator polynomial.

Among other applications, CRC-based techniques are used to verify data transmission or storage integrity. In the scope of the EN/IEC 60335-1 standard, they offer a means of verifying the flash memory integrity. The CRC calculation unit helps compute a signature of the software during runtime, to be compared with a reference signature generated at link-time and stored at a given memory location.

2.3.4 Embedded SRAM

Twenty Kbytes of embedded SRAM accessed (read/write) at CPU clock speed with 0 wait states.

2.3.5 Nested vectored interrupt controller (NVIC)

The STM32F103xx performance line embeds a nested vectored interrupt controller able to handle up to 43 maskable interrupt channels (not including the 16 interrupt lines of Cortex®-M3) and 16 priority levels.

- Closely coupled NVIC gives low-latency interrupt processing
- Interrupt entry vector table address passed directly to the core
- Closely coupled NVIC core interface
- Allows early processing of interrupts
- Processing of *late arriving* higher priority interrupts
- Support for tail-chaining
- Processor state automatically saved
- Interrupt entry restored on interrupt exit with no instruction overhead

This hardware block provides flexible interrupt management features with minimal interrupt latency.

2.3.6 External interrupt/event controller (EXTI)

The external interrupt/event controller consists of 19 edge detector lines used to generate interrupt/event requests. Each line can be independently configured to select the trigger event (rising edge, falling edge, both) and can be masked independently. A pending register maintains the status of the interrupt requests. The EXTI can detect an external line with a pulse width shorter than the internal APB2 clock period. Up to 80 GPIOs can be connected to the 16 external interrupt lines.

2.3.7 Clocks and startup

System clock selection is performed on startup, but the internal RC 8 MHz oscillator is selected as the default CPU clock on reset. An external 4-16 MHz clock can be selected, in which case it is monitored for failure. If failure is detected, the system automatically switches back to the internal RC oscillator. A software interrupt is generated if enabled. Similarly, full interrupt management of the PLL clock entry is available when necessary (for example, on failure of an indirectly used external crystal, resonator, or oscillator).

Several prescalers allow the configuration of the AHB frequency, the high-speed APB (APB2) and the low-speed APB (APB1) domains. The maximum frequency of the AHB and the high-speed APB domains is 72 MHz. The maximum allowed frequency of the low-speed APB domain is 36 MHz. See *Figure 2* for details on the clock tree.

2.3.8 Boot modes

At startup, boot pins are used to select one of three boot options:

- Boot from user Flash
- Boot from system memory
- Boot from embedded SRAM

The bootloader is located in the system memory. It is used to reprogram the flash memory by using USART1. For further details, refer to AN2606, available on *www.st.com*.

2.3.9 Power supply schemes

- V_{DD} = 2.0 to 3.6 V: external power supply for I/Os and the internal regulator. Provided externally through V_{DD} pins.
- V_{SSA}, V_{DDA} = 2.0 to 3.6 V: external analog power supplies for ADC, reset blocks, RCs, and PLL (minimum voltage to be applied to V_{DDA} is 2.4 V when the ADC is used). V_{DDA} and V_{SSA} must be connected to V_{DD} and V_{SS}, respectively.
- V_{BAT} = 1.8 to 3.6 V: power supply for RTC, external clock 32 kHz oscillator and backup registers (through power switch) when V_{DD} is not present.

For more details on how to connect power pins, refer to *Figure 14: Power supply scheme*.

2.3.10 Power supply supervisor

The device has an integrated power-on reset (POR)/power-down reset (PDR) circuitry. It is always active, and ensures proper operation starting from/down to 2 V. The device remains

in reset mode when V_{DD} is below a specified threshold, $V_{POR/PDR}$, without the need for an external reset circuit.

The device features an embedded programmable voltage detector (PVD) that monitors the V_{DD}/V_{DDA} power supply and compares it to the V_{PVD} threshold. An interrupt can be generated when V_{DD}/V_{DDA} drops below the V_{PVD} threshold and/or when V_{DD}/V_{DDA} is higher than the V_{PVD} threshold. The interrupt service routine can then generate a warning message and/or put the MCU into a safe state. The PVD is enabled by software.

Refer to *Table 11* for the values of $V_{POR/PDR}$ and V_{PVD}.

2.3.11 Voltage regulator

The regulator has three operation modes: main (MR), low-power (LPR) and power down.

- MR is used in the nominal regulation mode (Run)
- LPR is used in the Stop mode
- Power down is used in Standby mode: the regulator output is in high impedance: the kernel circuitry is powered down, inducing zero consumption (but the contents of the registers and SRAM are lost)

This regulator is always enabled after reset. It is disabled in Standby mode, providing high impedance output.

2.3.12 Low-power modes

The STM32F103xx performance line supports three low-power modes to achieve the best compromise between low-power consumption, short startup time and available wakeup sources:

- **Sleep** mode

  In Sleep mode, only the CPU is stopped. All peripherals continue to operate and can wake up the CPU when an interrupt/event occurs.

- **Stop** mode

  The Stop mode achieves the lowest power consumption while retaining the content of SRAM and registers. All clocks in the 1.8 V domain are stopped, the PLL, the HSI RC and the HSE crystal oscillators are disabled. The voltage regulator can also be put either in normal or in low-power mode.

  The device can be woken up from Stop mode by any of the EXTI lines. The EXTI line source can be one of the 16 external lines, the PVD output, the RTC alarm or the USB wakeup.

- **Standby** mode

  The Standby mode is used to achieve the lowest power consumption. The internal voltage regulator is switched off so that the entire 1.8 V domain is powered off. The PLL, the HSI RC and the HSE crystal oscillators are also switched off. After entering Standby mode, SRAM and register contents are lost except for registers in the Backup domain and Standby circuitry.

  The device exits Standby mode when an external reset (NRST pin), an IWDG reset, a rising edge on the WKUP pin, or an RTC alarm occurs.

Note: The RTC, the IWDG, and the corresponding clock sources are not stopped by entering Stop or Standby mode.

2.3.13 DMA

The flexible 7-channel general-purpose DMA is able to manage memory-to-memory, peripheral-to-memory and memory-to-peripheral transfers. The DMA controller supports circular buffer management avoiding the generation of interrupts when the controller reaches the end of the buffer.

Each channel is connected to dedicated hardware DMA requests, with support for software trigger on each channel. Configuration is made by software and transfer sizes between source and destination are independent.

The DMA can be used with the main peripherals: SPI, I^2C, USART, general-purpose and advanced-control timers TIMx and ADC.

2.3.14 RTC (real-time clock) and backup registers

The RTC and the backup registers are supplied through a switch that takes power either on V_{DD} supply when present or through the V_{BAT} pin. The backup registers are ten 16-bit registers used to store 20 bytes of user application data when V_{DD} power is not present.

The real-time clock provides a set of continuously running counters which can be used with suitable software to provide a clock calendar function, and provides an alarm interrupt and a periodic interrupt. It is clocked by a 32.768 kHz external crystal, resonator or oscillator, the internal low-power RC oscillator or the high-speed external clock divided by 128. The internal low-power RC has a typical frequency of 40 kHz. The RTC can be calibrated using an external 512 Hz output to compensate for any natural crystal deviation. The RTC features a 32-bit programmable counter for long-term measurement using the Compare register to generate an alarm. A 20-bit prescaler is used for the time base clock and is by default configured to generate a time base of 1 second from a clock at 32.768 kHz.

2.3.15 Timers and watchdogs

The medium-density STM32F103xx performance line devices include an advanced-control timer, three general-purpose timers, two watchdog timers and a SysTick timer.

Table 4 compares the features of the advanced-control and general-purpose timers.

Table 4. Timer feature comparison

Timer	Counter resolution	Counter type	Prescaler factor	DMA request generation	Capture/compare channels	Complementary outputs
TIM1	16-bit	Up, down, up/down	Any integer between 1 and 65536	Yes	4	Yes
TIM2, TIM3, TIM4	16-bit	Up, down, up/down	Any integer between 1 and 65536	Yes	4	No

Advanced-control timer (TIM1)

The advanced-control timer (TIM1) can be seen as a three-phase PWM multiplexed on 6 channels. It has complementary PWM outputs with programmable inserted dead-times. It can also be seen as a complete general-purpose timer. The 4 independent channels can be used for

- Input capture
- Output compare
- PWM generation (edge- or center-aligned modes)
- One-pulse mode output

If configured as a general-purpose 16-bit timer, it has the same features as the TIMx timer. If configured as the 16-bit PWM generator, it has full modulation capability (0-100%).

In debug mode, the advanced-control timer counter can be frozen and the PWM outputs disabled to turn off any power switch driven by these outputs.

Many features are shared with those of the general-purpose TIM timers which have the same architecture. The advanced-control timer can therefore work together with the TIM timers via the Timer Link feature for synchronization or event chaining.

General-purpose timers (TIMx)

There are up to three synchronizable general-purpose timers embedded in the STM32F103xx performance line devices. These timers are based on a 16-bit auto-reload up/down counter, a 16-bit prescaler and feature four independent channels each for input capture/output compare, PWM or one-pulse mode output. This gives up to 12 input captures/output compares/PWMs on the largest packages.

The general-purpose timers can work together with the advanced-control timer via the Timer Link feature for synchronization or event chaining. Their counter can be frozen in debug mode. Any of the general-purpose timers can be used to generate PWM outputs. They all have independent DMA request generation.

These timers are capable of handling quadrature (incremental) encoder signals and the digital outputs from one to three Hall-effect sensors.

Independent watchdog

The independent watchdog is based on a 12-bit downcounter and 8-bit prescaler. It is clocked from an independent 40 kHz internal RC and as it operates independently of the main clock, it can operate in Stop and Standby modes. It can be used either as a watchdog to reset the device when a problem occurs, or as a free-running timer for application timeout management. It is hardware- or software-configurable through the option bytes. The counter can be frozen in debug mode.

Window watchdog

The window watchdog is based on a 7-bit downcounter that can be set as free-running. It can be used as a watchdog to reset the device when a problem occurs. It is clocked from the main clock. It has an early warning interrupt capability and the counter can be frozen in debug mode.

SysTick timer

This timer is dedicated for OS, but can be used also as a standard downcounter. It features:

- A 24-bit downcounter
- Autoreload capability
- Maskable system interrupt generation when the counter reaches 0
- Programmable clock source

2.3.16 I²C bus

Up to two I²C bus interfaces can operate in multimaster and slave modes. They can support standard and fast modes.

They support dual slave addressing (7-bit only) and both 7/10-bit addressing in master mode. A hardware CRC generation/verification is embedded.

They can be served by DMA and they support SM Bus 2.0/PM Bus.

2.3.17 Universal synchronous/asynchronous receiver transmitter (USART)

One of the USART interfaces is able to communicate at speeds of up to 4.5 Mbit/s. The other available interfaces communicate at up to 2.25 Mbit/s. They provide hardware management of the CTS and RTS signals, IrDA SIR ENDEC support, are ISO 7816 compliant and have LIN Master/Slave capability.

All USART interfaces can be served by the DMA controller.

2.3.18 Serial peripheral interface (SPI)

Up to two SPIs are able to communicate up to 18 Mbits/s in slave and master modes in full-duplex and simplex communication modes. The 3-bit prescaler gives 8 master mode frequencies and the frame is configurable to 8 bits or 16 bits. The hardware CRC generation/verification supports basic SD Card/MMC modes.

Both SPIs can be served by the DMA controller.

2.3.19 Controller area network (CAN)

The CAN is compliant with specifications 2.0A and B (active) with a bit rate up to 1 Mbit/s. It can receive and transmit standard frames with 11-bit identifiers as well as extended frames with 29-bit identifiers. It has three transmit mailboxes, two receive FIFOs with three stages and 14 scalable filter banks.

2.3.20 Universal serial bus (USB)

The STM32F103xx performance line embeds a USB device peripheral compatible with the USB full-speed 12 Mbs. The USB interface implements a full-speed (12 Mbit/s) function interface. It has software-configurable endpoint setting and suspend/resume support. The dedicated 48 MHz clock is generated from the internal main PLL (the clock source must use a HSE crystal oscillator).

2.3.21 GPIOs (general-purpose inputs/outputs)

Each of the GPIO pins can be configured by software as output (push-pull or open-drain), as input (with or without pull-up or pull-down) or as peripheral alternate function. Most of the GPIO pins are shared with digital or analog alternate functions. All GPIOs are high current-capable.

The I/Os alternate function configuration can be locked if needed following a specific sequence in order to avoid spurious writing to the I/Os registers.

I/Os on APB2 with up to 18 MHz toggling speed.

2.3.22 ADC (analog-to-digital converter)

Two 12-bit analog-to-digital converters are embedded into STM32F103xx performance line devices and each ADC shares up to 16 external channels, performing conversions in single-shot or scan modes. In scan mode, automatic conversion is performed on a selected group of analog inputs.

Additional logic functions embedded in the ADC interface allow:

- Simultaneous sample and hold
- Interleaved sample and hold
- Single shunt

The ADC can be served by the DMA controller.

An analog watchdog feature allows very precise monitoring of the converted voltage of one, some or all selected channels. An interrupt is generated when the converted voltage is outside the programmed thresholds.

The events generated by the general-purpose timers (TIMx) and the advanced-control timer (TIM1) can be internally connected to the ADC start trigger, injection trigger, and DMA trigger respectively, to allow the application to synchronize A/D conversion and timers.

2.3.23 Temperature sensor

The temperature sensor has to generate a voltage that varies linearly with temperature. The conversion range is between 2 V < V_{DDA} < 3.6 V. The temperature sensor is internally connected to the ADC12_IN16 input channel which is used to convert the sensor output voltage into a digital value.

2.3.24 Serial wire JTAG debug port (SWJ-DP)

The Arm SWJ-DP Interface is embedded. and is a combined JTAG and serial wire debug port that enables either a serial wire debug or a JTAG probe to be connected to the target. The JTAG TMS and TCK pins are shared with SWDIO and SWCLK, respectively, and a specific sequence on the TMS pin is used to switch between JTAG-DP and SW-DP.

3 Pinouts and pin description

Figure 3. STM32F103xx performance line LFBGA100 ballout

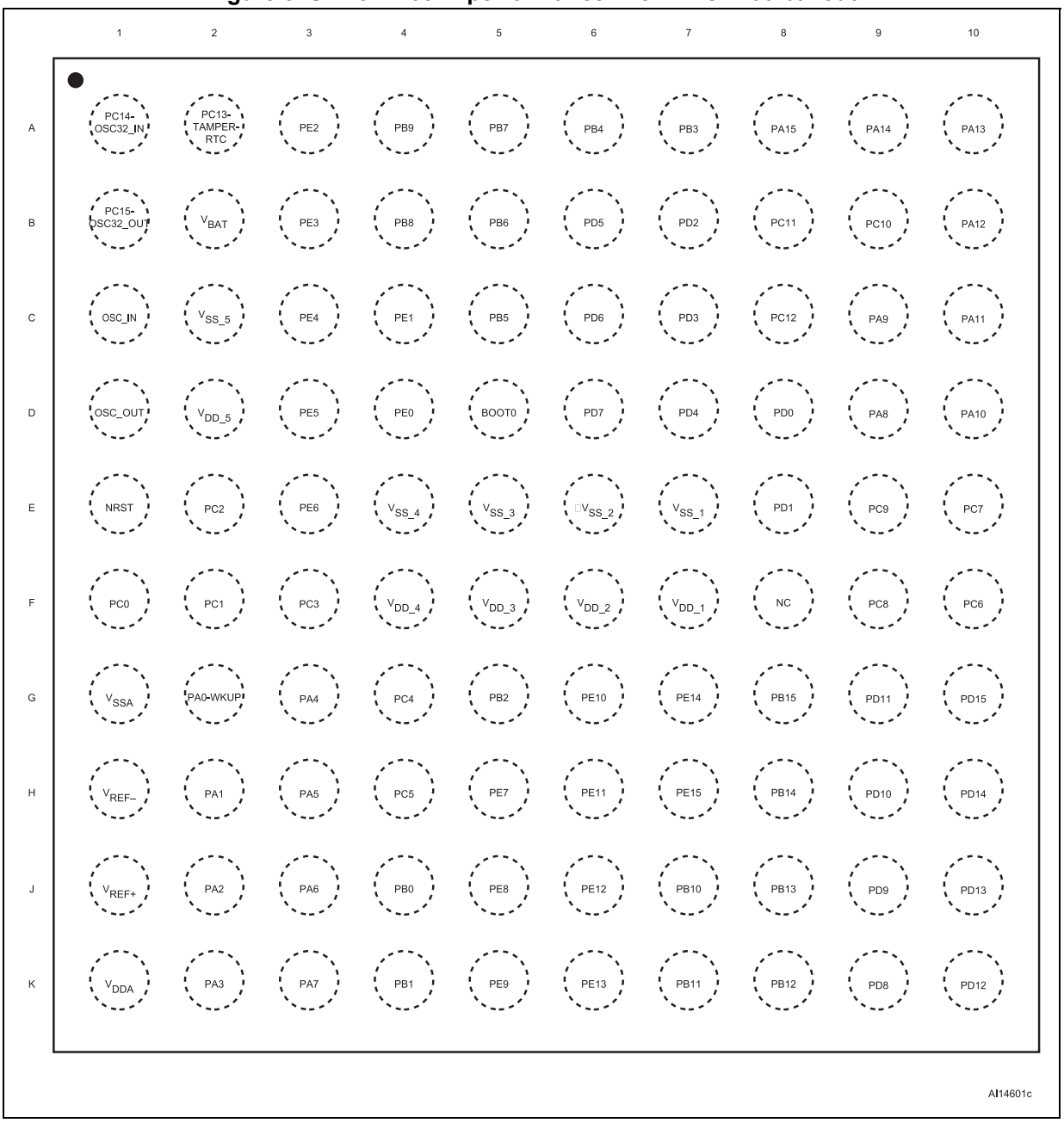

Figure 4. STM32F103xx performance line LQFP100 pinout

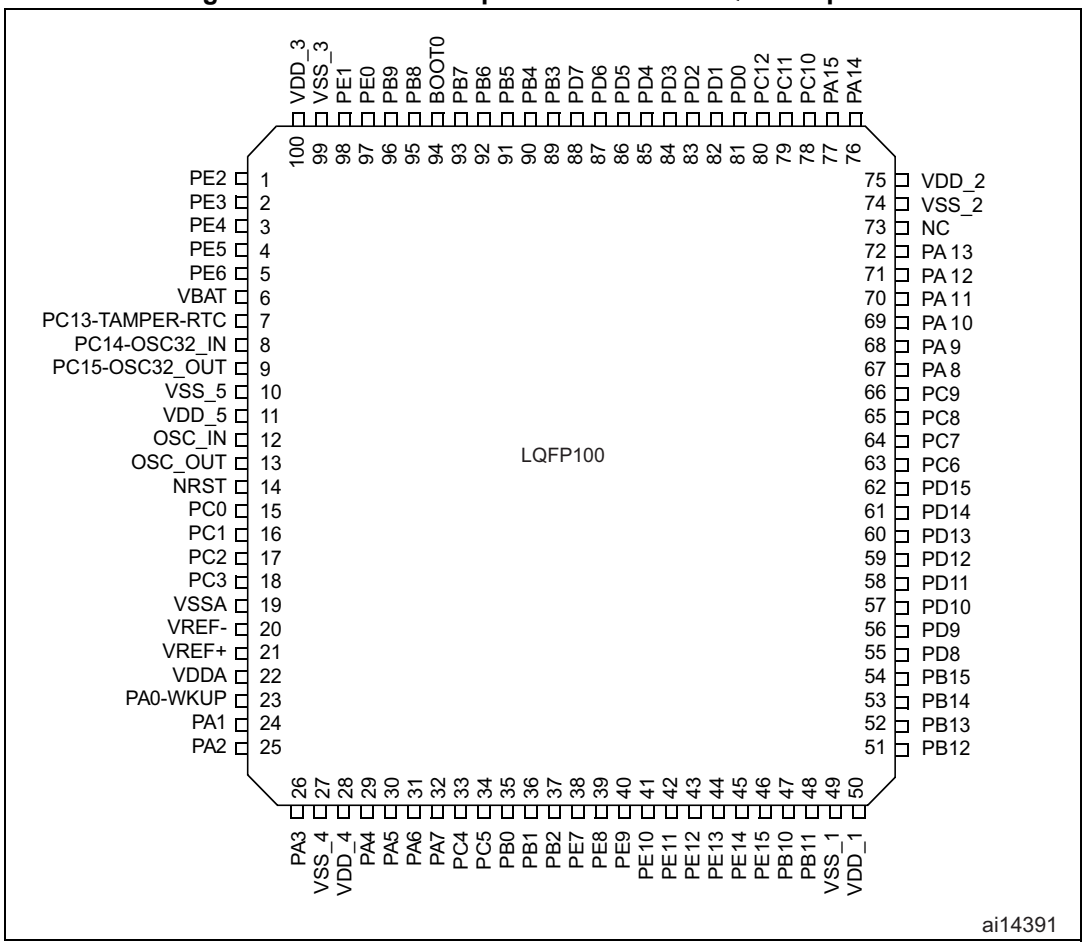

Figure 5. STM32F103xx performance line UFBGA100 pinout

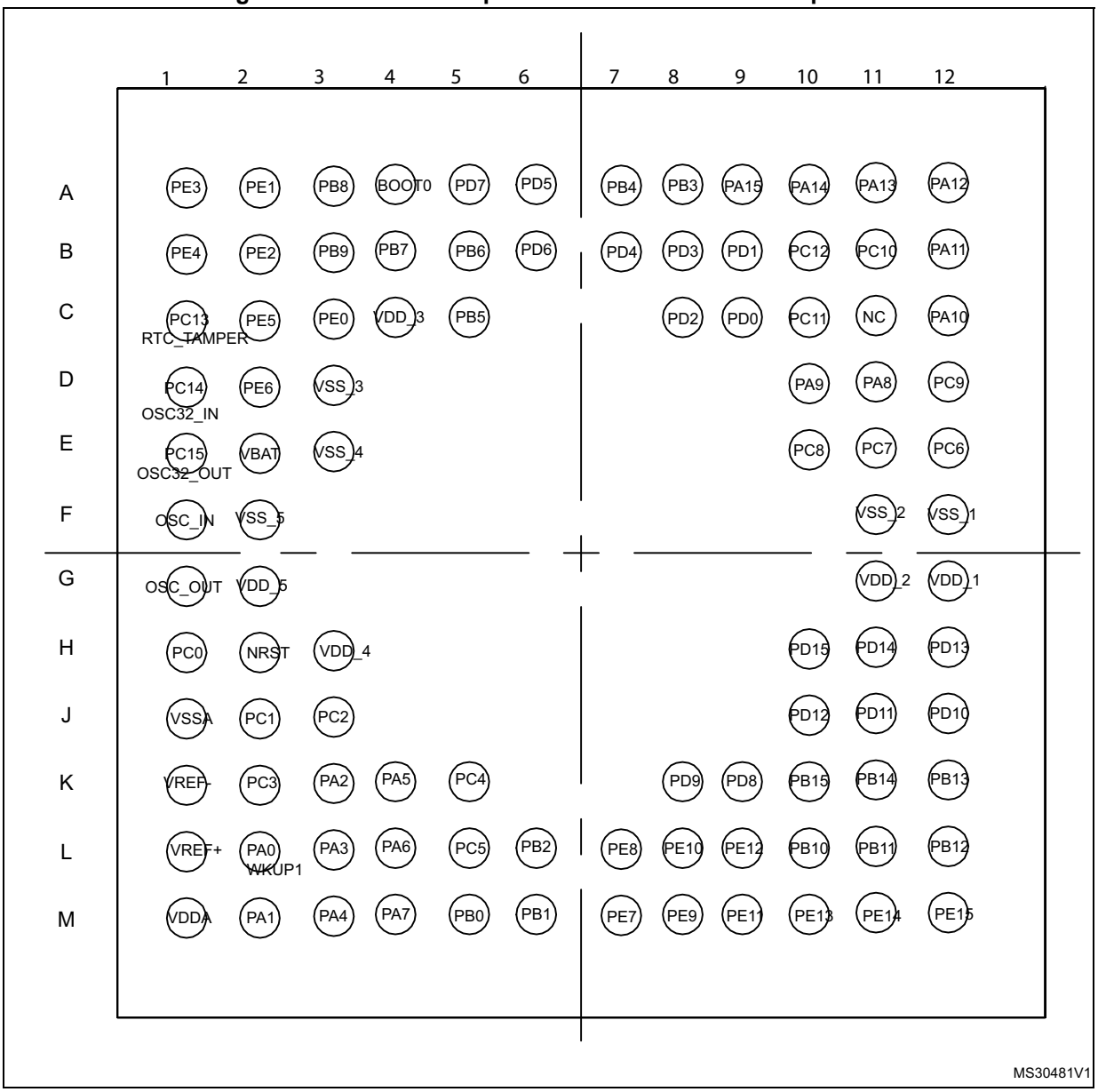

Figure 6. STM32F103xx performance line LQFP64 pinout

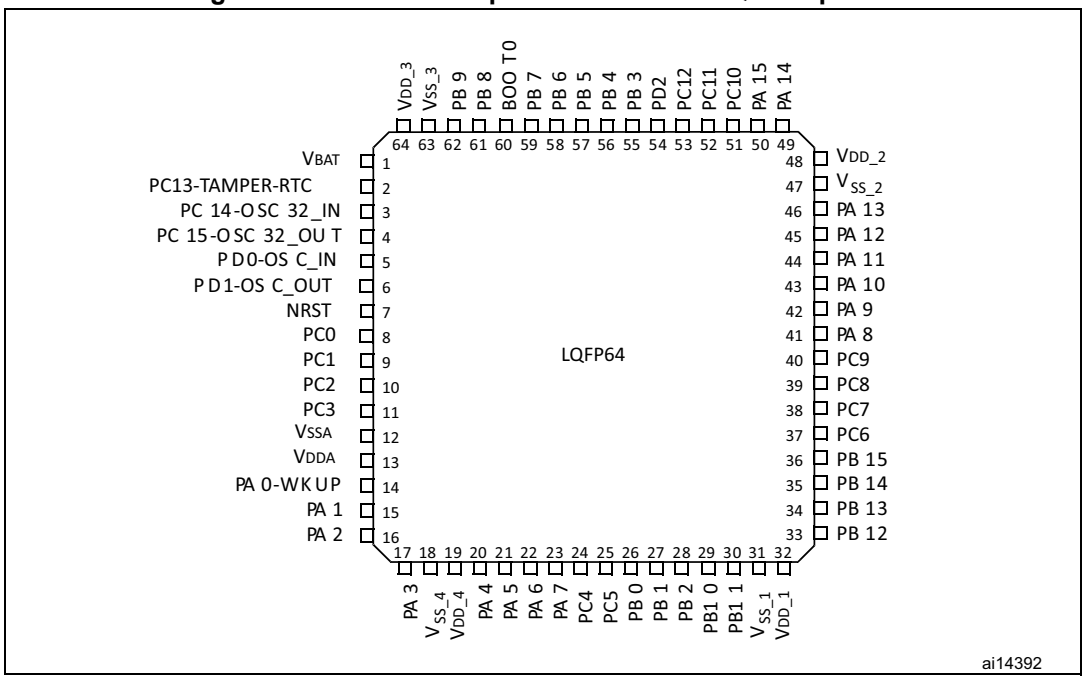

Figure 7. STM32F103xx performance line TFBGA64 ballout

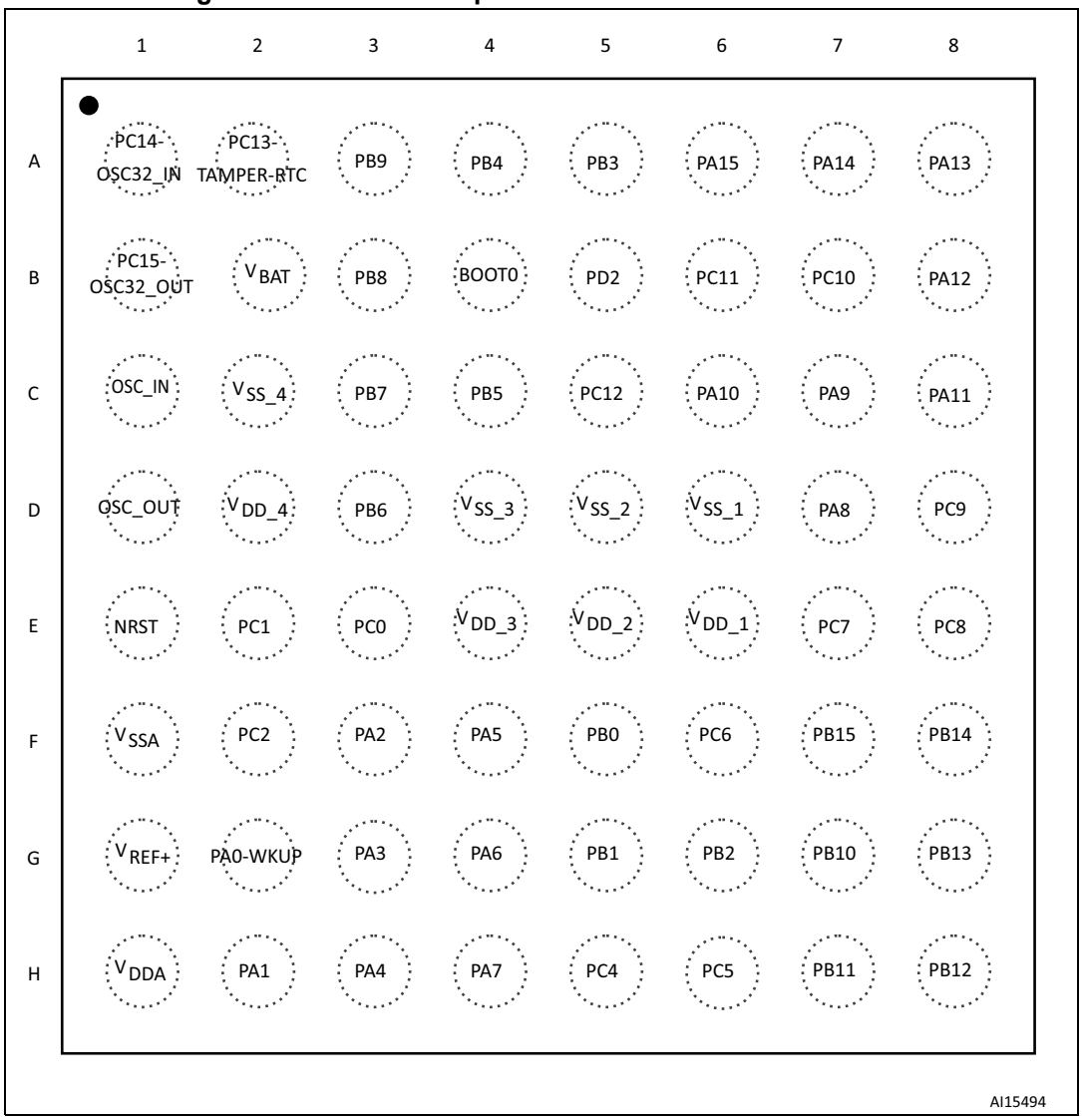

Figure 8. STM32F103xx performance line LQFP48 pinout

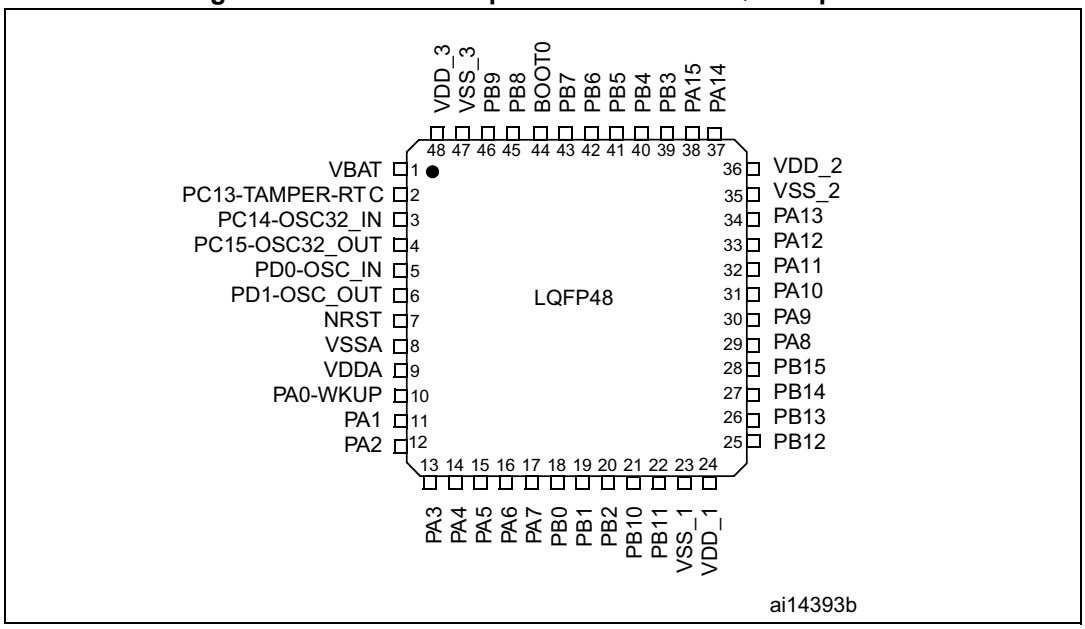

Figure 9. STM32F103xx performance line UFQFPN48 pinout

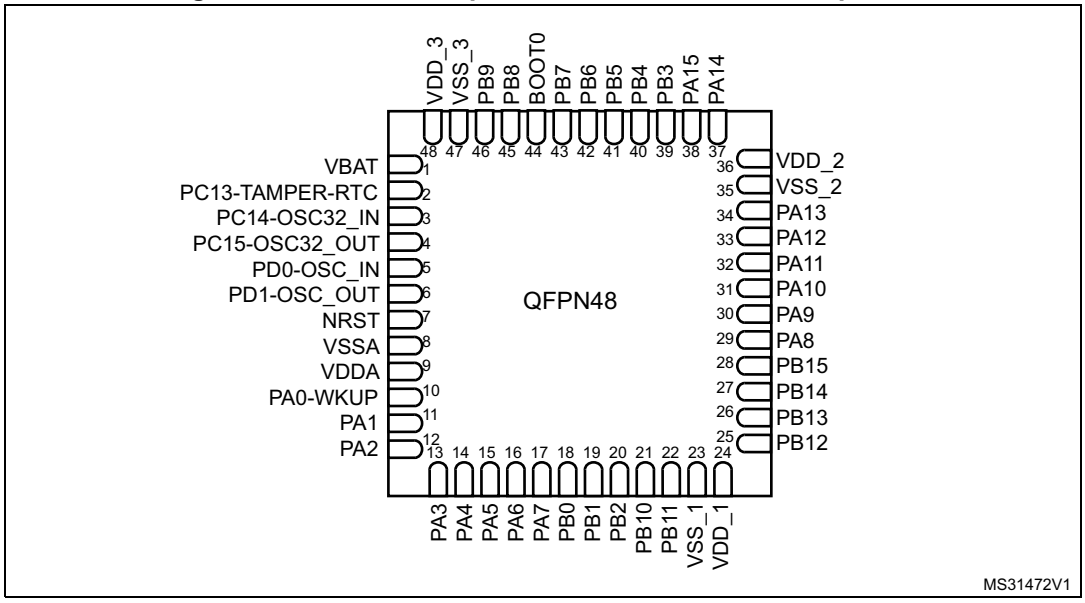

Figure 10. STM32F103xx performance line VFQFPN36 pinout

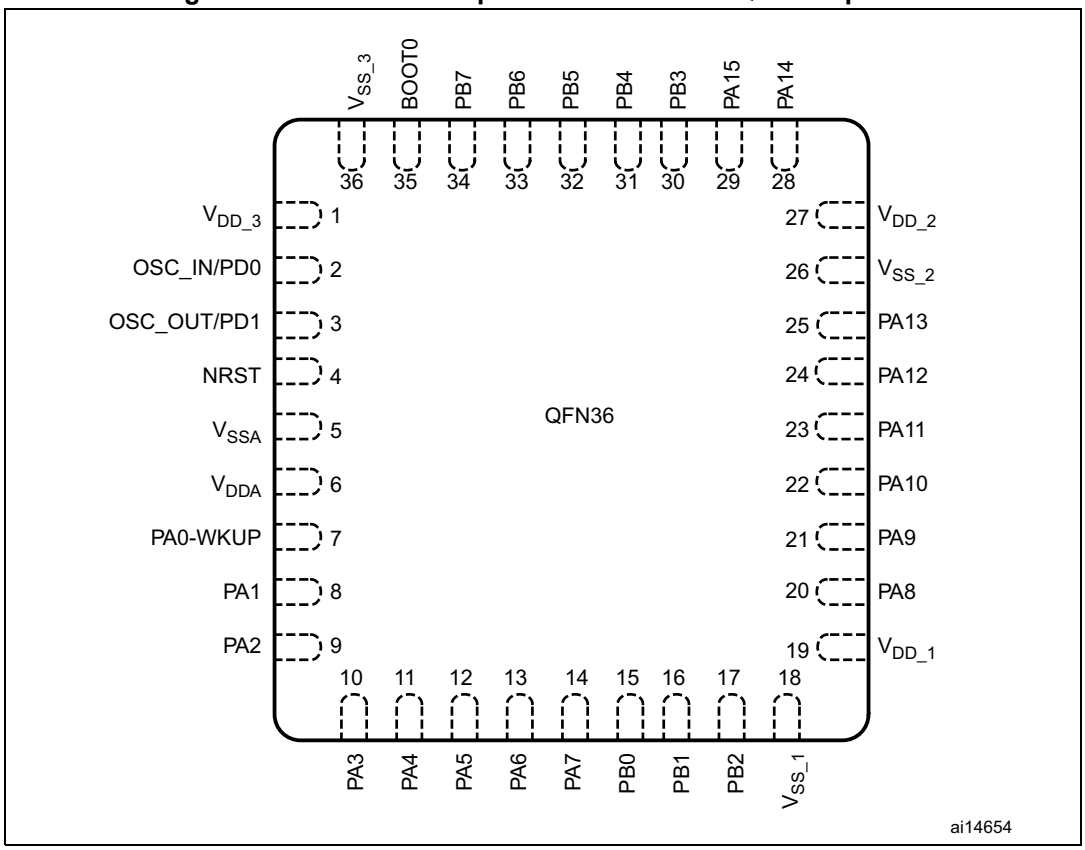

Table 5. Medium-density STM32F103xx pin definitions

Pins							Pin name	Type(1)	I / O Level(2)	Main function(3) (after reset)	Alternate functions(4)	
LFBGA100	UFBG100	LQFP48/UFQFPN48	TFBGA64	LQFP64	LQFP100	VFQFPN36					Default	Remap
A3	B2	-	-	-	1	-	PE2	I/O	FT	PE2	TRACECK	-
B3	A1	-	-	-	2	-	PE3	I/O	FT	PE3	TRACED0	-
C3	B1	-	-	-	3	-	PE4	I/O	FT	PE4	TRACED1	-
D3	C2	-	-	-	4	-	PE5	I/O	FT	PE5	TRACED2	-
E3	D2	-	-	-	5	-	PE6	I/O	FT	PE6	TRACED3	-
B2	E2	1	B2	1	6	-	V_{BAT}	S	-	V_{BAT}	-	-
A2	C1	2	A2	2	7	-	PC13-TAMPER-RTC(5)	I/O	-	PC13(6)	TAMPER-RTC	-
A1	D1	3	A1	3	8	-	PC14-OSC32_IN(5)	I/O	-	PC14(6)	OSC32_IN	-
B1	E1	4	B1	4	9	-	PC15-OSC32_OUT(5)	I/O	-	PC15(6)	OSC32_OUT	-
C2	F2	-	-	-	10	-	V_{SS_5}	S	-	V_{SS_5}	-	-
D2	G2	-	-	-	11	-	V_{DD_5}	S	-	V_{DD_5}	-	
C1	F1	5	C1	5	12	2	OSC_IN	I	-	OSC_IN	-	PD0(7)
D1	G1	6	D1	6	13	3	OSC_OUT	O	-	OSC_OUT		PD1(7)
E1	H2	7	E1	7	14	4	NRST	I/O	-	NRST	-	-
F1	H1	-	E3	8	15	-	PC0	I/O	-	PC0	ADC12_IN10	-
F2	J2	-	E2	9	16	-	PC1	I/O	-	PC1	ADC12_IN11	-
E2	J3	-	F2	10	17	-	PC2	I/O	-	PC2	ADC12_IN12	-
F3	K2	-	-(8)	11	18	-	PC3	I/O	-	PC3	ADC12_IN13	-
G1	J1	8	F1	12	19	5	V_{SSA}	S	-	V_{SSA}	-	-
H1	K1	-	-	-	20	-	V_{REF-}	S	-	V_{REF-}	-	-
J1	L1	-	G1(8)	-	21	-	V_{REF+}	S	-	V_{REF+}	-	-
K1	M1	9	H1	13	22	6	V_{DDA}	S	-	V_{DDA}	-	-

Table 5. Medium-density STM32F103xx pin definitions (continued)

Pins							Pin name	Type(1)	I / O Level(2)	Main function(3) (after reset)	Alternate functions(4)	
LFBGA100	UFBG100	LQFP48/UFQFPN48	TFBGA64	LQFP64	LQFP100	VFQFPN36					Default	Remap
G2	L2	10	G2	14	23	7	PA0-WKUP	I/O	-	PA0	WKUP/ USART2_CTS(9)/ ADC12_IN0/ TIM2_CH1_ ETR(9)	-
H2	M2	11	H2	15	24	8	PA1	I/O	-	PA1	USART2_RTS(9)/ ADC12_IN1/ TIM2_CH2(9)	-
J2	K3	12	F3	16	25	9	PA2	I/O	-	PA2	USART2_TX(9)/ ADC12_IN2/ TIM2_CH3(9)	-
K2	L3	13	G3	17	26	10	PA3	I/O	-	PA3	USART2_RX(9)/ ADC12_IN3/ TIM2_CH4(9)	-
E4	E3	-	C2	18	27	-	V_{SS_4}	S	-	V_{SS_4}	-	-
F4	H3	-	D2	19	28	-	V_{DD_4}	S	-	V_{DD_4}	-	-
G3	M3	14	H3	20	29	11	PA4	I/O	-	PA4	SPI1_NSS(9)/ USART2_CK(9)/ ADC12_IN4	-
H3	K4	15	F4	21	30	12	PA5	I/O	-	PA5	SPI1_SCK(9)/ ADC12_IN5	-
J3	L4	16	G4	22	31	13	PA6	I/O	-	PA6	SPI1_MISO(9)/ ADC12_IN6/ TIM3_CH1(9)	TIM1_BKIN
K3	M4	17	H4	23	32	14	PA7	I/O	-	PA7	SPI1_MOSI(9)/ ADC12_IN7/ TIM3_CH2(9)	TIM1_CH1N
G4	K5	-	H5	24	33		PC4	I/O	-	PC4	ADC12_IN14	-
H4	L5	-	H6	25	34		PC5	I/O	-	PC5	ADC12_IN15	-
J4	M5	18	F5	26	35	15	PB0	I/O	-	PB0	ADC12_IN8/ TIM3_CH3(9)	TIM1_CH2N
K4	M6	19	G5	27	36	16	PB1	I/O	-	PB1	ADC12_IN9/ TIM3_CH4(9)	TIM1_CH3N

Table 5. Medium-density STM32F103xx pin definitions (continued)

Pins							Pin name	Type(1)	I / O Level(2)	Main function(3) (after reset)	Alternate functions(4)	
LFBGA100	UFBG100	LQFP48/UFQFPN48	TFBGA64	LQFP64	LQFP100	VFQFPN36					Default	Remap
G5	L6	20	G6	28	37	17	PB2	I/O	FT	PB2/BOOT1	-	-
H5	M7	-	-	-	38	-	PE7	I/O	FT	PE7	-	TIM1_ETR
J5	L7	-	-	-	39	-	PE8	I/O	FT	PE8	-	TIM1_CH1N
K5	M8	-	-	-	40	-	PE9	I/O	FT	PE9	-	TIM1_CH1
G6	L8	-	-	-	41	-	PE10	I/O	FT	PE10	-	TIM1_CH2N
H6	M9	-	-	-	42	-	PE11	I/O	FT	PE11	-	TIM1_CH2
J6	L9	-	-	-	43	-	PE12	I/O	FT	PE12	-	TIM1_CH3N
K6	M10	-	-	-	44	-	PE13	I/O	FT	PE13	-	TIM1_CH3
G7	M11	-	-	-	45	-	PE14	I/O	FT	PE14	-	TIM1_CH4
H7	M12	-	-	-	46	-	PE15	I/O	FT	PE15	-	TIM1_BKIN
J7	L10	21	G7	29	47	-	PB10	I/O	FT	PB10	I2C2_SCL/ USART3_TX(9)	TIM2_CH3
K7	L11	22	H7	30	48	-	PB11	I/O	FT	PB11	I2C2_SDA/ USART3_RX(9)	TIM2_CH4
E7	F12	23	D6	31	49	18	V_{SS_1}	S	-	V_{SS_1}	-	-
F7	G12	24	E6	32	50	19	V_{DD_1}	S	-	V_{DD_1}	-	-
K8	L12	25	H8	33	51	-	PB12	I/O	FT	PB12	SPI2_NSS/ I2C2_SMBAI/ USART3_CK(9)/ TIM1_BKIN(9)	-
J8	K12	26	G8	34	52	-	PB13	I/O	FT	PB13	SPI2_SCK/ USART3_CTS(9)/ TIM1_CH1N (9)	-
H8	K11	27	F8	35	53	-	PB14	I/O	FT	PB14	SPI2_MISO/ USART3_RTS(9) TIM1_CH2N (9)	-
G8	K10	28	F7	36	54	-	PB15	I/O	FT	PB15	SPI2_MOSI/ TIM1_CH3N(9)	-
K9	K9	-	-	-	55	-	PD8	I/O	FT	PD8	-	USART3_TX
J9	K8	-	-	-	56	-	PD9	I/O	FT	PD9	-	USART3_RX

Table 5. Medium-density STM32F103xx pin definitions (continued)

Pins							Pin name	Type[1]	I / O Level[2]	Main function[3] (after reset)	Alternate functions[4]	
LFBGA100	UFBG100	LQFP48/UFQFPN48	TFBGA64	LQFP64	LQFP100	VFQFPN36					Default	Remap
H9	J12	-	-	-	57	-	PD10	I/O	FT	PD10	-	USART3_CK
G9	J11	-	-	-	58	-	PD11	I/O	FT	PD11	-	USART3_CTS
K10	J10	-	-	-	59	-	PD12	I/O	FT	PD12	-	TIM4_CH1 / USART3_RTS
J10	H12	-	-	-	60	-	PD13	I/O	FT	PD13	-	TIM4_CH2
H10	H11	-	-	-	61	-	PD14	I/O	FT	PD14	-	TIM4_CH3
G10	H10	-	-	-	62	-	PD15	I/O	FT	PD15	-	TIM4_CH4
F10	E12	-	F6	37	63	-	PC6	I/O	FT	PC6	-	TIM3_CH1
E10	E11		E7	38	64	-	PC7	I/O	FT	PC7	-	TIM3_CH2
F9	E10		E8	39	65	-	PC8	I/O	FT	PC8	-	TIM3_CH3
E9	D12	-	D8	40	66	-	PC9	I/O	FT	PC9	-	TIM3_CH4
D9	D11	29	D7	41	67	20	PA8	I/O	FT	PA8	USART1_CK/ TIM1_CH1[9]/ MCO	-
C9	D10	30	C7	42	68	21	PA9	I/O	FT	PA9	USART1_TX[9]/ TIM1_CH2[9]	-
D10	C12	31	C6	43	69	22	PA10	I/O	FT	PA10	USART1_RX[9]/ TIM1_CH3[9]	-
C10	B12	32	C8	44	70	23	PA11	I/O	FT	PA11	USART1_CTS/ CANRX[9]/ USBDM/ TIM1_CH4[9]	-
B10	A12	33	B8	45	71	24	PA12	I/O	FT	PA12	USART1_RTS/ CANTX[9] /USBDP TIM1_ETR[9]	-
A10	A11	34	A8	46	72	25	PA13	I/O	FT	JTMS/SWDIO	-	PA13
F8	C11	-	-	-	73	-	Not connected					-
E6	F11	35	D5	47	74	26	V_{SS_2}	S	-	V_{SS_2}	-	-
F6	G11	36	E5	48	75	27	V_{DD_2}	S	-	V_{DD_2}	-	-

Table 5. Medium-density STM32F103xx pin definitions (continued)

Pins							Pin name	Type(1)	I / O Level(2)	Main function(3) (after reset)	Alternate functions(4)	
LFBGA100	UFBG100	LQFP48/UFQFPN48	TFBGA64	LQFP64	LQFP100	VFQFPN36					Default	Remap
A9	A10	37	A7	49	76	28	PA14	I/O	FT	JTCK/SWCLK	-	PA14
A8	A9	38	A6	50	77	29	PA15	I/O	FT	JTDI	-	TIM2_CH1_ ETR/ PA15 /SPI1_NSS
B9	B11	-	B7	51	78		PC10	I/O	FT	PC10	-	USART3_TX
B8	C10	-	B6	52	79		PC11	I/O	FT	PC11	-	USART3_RX
C8	B10	-	C5	53	80		PC12	I/O	FT	PC12	-	USART3_CK
D8	C9	-	C1	-	81	2	PD0	I/O	FT	PD0	-	CANRX
E8	B9	-	D1	-	82	3	PD1	I/O	FT	PD1	-	CANTX
B7	C8		B5	54	83	-	PD2	I/O	FT	PD2	TIM3_ETR	-
C7	B8	-	-	-	84	-	PD3	I/O	FT	PD3	-	USART2_CTS
D7	B7	-	-	-	85	-	PD4	I/O	FT	PD4	-	USART2_RTS
B6	A6	-	-	-	86	-	PD5	I/O	FT	PD5	-	USART2_TX
C6	B6	-	-	-	87	-	PD6	I/O	FT	PD6	-	USART2_RX
D6	A5	-	-	-	88	-	PD7	I/O	FT	PD7	-	USART2_CK
A7	A8	39	A5	55	89	30	PB3	I/O	FT	JTDO	-	TIM2_CH2 / PB3 TRACESWO SPI1_SCK
A6	A7	40	A4	56	90	31	PB4	I/O	FT	JNTRST	-	TIM3_CH1/ PB4/ SPI1_MISO
C5	C5	41	C4	57	91	32	PB5	I/O		PB5	I2C1_SMBAI	TIM3_CH2 / SPI1_MOSI
B5	B5	42	D3	58	92	33	PB6	I/O	FT	PB6	I2C1_SCL(9)/ TIM4_CH1(9)	USART1_TX
A5	B4	43	C3	59	93	34	PB7	I/O	FT	PB7	I2C1_SDA(9)/ TIM4_CH2(9)	USART1_RX
D5	A4	44	B4	60	94	35	BOOT0	I		BOOT0	-	-

Table 5. Medium-density STM32F103xx pin definitions (continued)

Pins							Pin name	Type(1)	I / O Level(2)	Main function(3) (after reset)	Alternate functions(4)	
LFBGA100	UFBG100	LQFP48/UFQFPN48	TFBGA64	LQFP64	LQFP100	VFQFPN36					Default	Remap
B4	A3	45	B3	61	95	-	PB8	I/O	FT	PB8	TIM4_CH3(9)	I2C1_SCL / CANRX
A4	B3	46	A3	62	96	-	PB9	I/O	FT	PB9	TIM4_CH4(9)	I2C1_SDA/ CANTX
D4	C3	-	-	-	97	-	PE0	I/O	FT	PE0	TIM4_ETR	-
C4	A2	-	-	-	98	-	PE1	I/O	FT	PE1	-	-
E5	D3	47	D4	63	99	36	V_{SS_3}	S	-	V_{SS_3}	-	-
F5	C4	48	E4	64	100	1	V_{DD_3}	S	-	V_{DD_3}	-	-

1. I = input, O = output, S = supply.
2. FT = 5 V tolerant.
3. Function availability depends upon the chosen device. For devices having reduced peripheral counts, it is always the lower number of peripheral that is included. For example, if a device has only one SPI and two USARTs, they are called SPI1 and USART1 and USART2, respectively. Refer to *Table 2*.
4. If several peripherals share the same I/O pin, to avoid conflict between these alternate functions only one peripheral should be enabled at a time through the peripheral clock enable bit (in the corresponding RCC peripheral clock enable register).
5. PC13, PC14 and PC15 are supplied through the power switch. Since the switch only sinks a limited amount of current (3 mA), the use of GPIOs PC13 to PC15 in output mode is limited: the speed should not exceed 2 MHz with a maximum load of 30 pF and these IOs must not be used as a current source (e.g. to drive a LED).
6. Main function after the first backup domain power-up. Later on, it depends on the contents of the Backup registers even after reset (because these registers are not reset by the main reset). For details on how to manage these IOs, refer to the Battery backup domain and BKP register description sections in the STM32F10xxx reference manual, available from the STMicroelectronics website: *www.st.com*.
7. The pins number 2 and 3 in the VFQFPN36 package, 5 and 6 in the LQFP48, UFQFP48 and LQFP64 packages, and C1 and C2 in the TFBGA64 package are configured as OSC_IN/OSC_OUT after reset, however the functionality of PD0 and PD1 can be remapped by software on these pins. For the LQFP100 package, PD0 and PD1 are available by default, so there is no need for remapping. For more details, refer to the Alternate function I/O and debug configuration section in the STM32F10xxx reference manual.
   The use of PD0 and PD1 in output mode is limited as they can only be used at 50 MHz in output mode.
8. Unlike in the LQFP64 package, there is no PC3 in the TFBGA64 package. The V_{REF+} functionality is provided instead.
9. This alternate function can be remapped by software to some other port pins (if available on the used package). For more details, refer to the Alternate function I/O and debug configuration section in the STM32F10xxx reference manual, available from the STMicroelectronics website: *www.st.com*.

4 Memory mapping

The memory map is shown in *Figure 11*.

Figure 11. Memory map

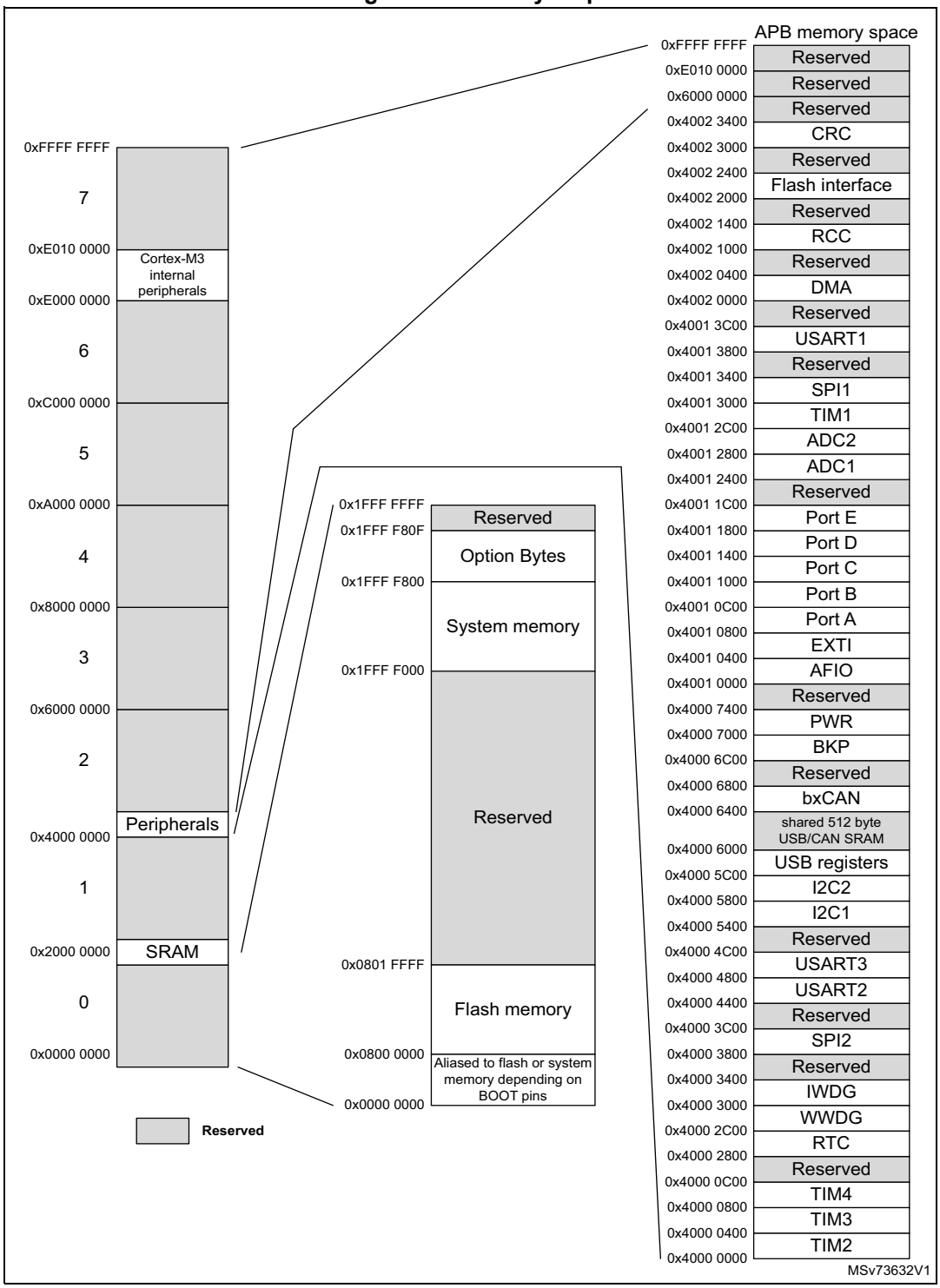

5 Electrical characteristics

5.1 Parameter conditions

Unless otherwise specified, all voltages are referenced to V_{SS}.

5.1.1 Minimum and maximum values

Unless otherwise specified the minimum and maximum values are guaranteed in the worst conditions of ambient temperature, supply voltage and frequencies by tests in production on 100% of the devices with an ambient temperature at T_A = 25°C and T_A = $T_A$max (given by the selected temperature range).

Data based on characterization results, design simulation and/or technology characteristics are indicated in the table footnotes and are not tested in production. Based on characterization, the minimum and maximum values refer to sample tests and represent the mean value plus or minus three times the standard deviation (mean ± 3σ).

5.1.2 Typical values

Unless otherwise specified, typical data are based on T_A = 25°C, V_{DD} = 3.3 V (for the 2 V ≤ V_{DD} ≤ 3.6 V voltage range). They are given only as design guidelines and are not tested.

Typical ADC accuracy values are determined by characterization of a batch of samples from a standard diffusion lot over the full temperature range, where 95% of the devices have an error less than or equal to the value indicated (mean ± 2σ).

5.1.3 Typical curves

Unless otherwise specified, all typical curves are given only as design guidelines and are not tested.

5.1.4 Loading capacitor

The loading conditions used for pin parameter measurement are shown in *Figure 12*.

5.1.5 Pin input voltage

The input voltage measurement on a pin of the device is described in *Figure 13*.

Figure 12. Pin loading conditions

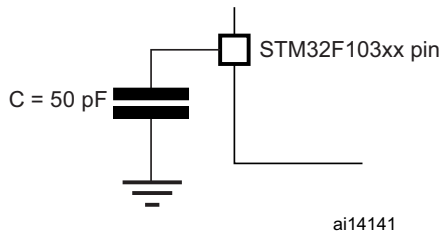

Figure 13. Pin input voltage

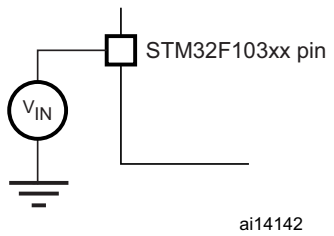

5.1.6 Power supply scheme

Figure 14. Power supply scheme

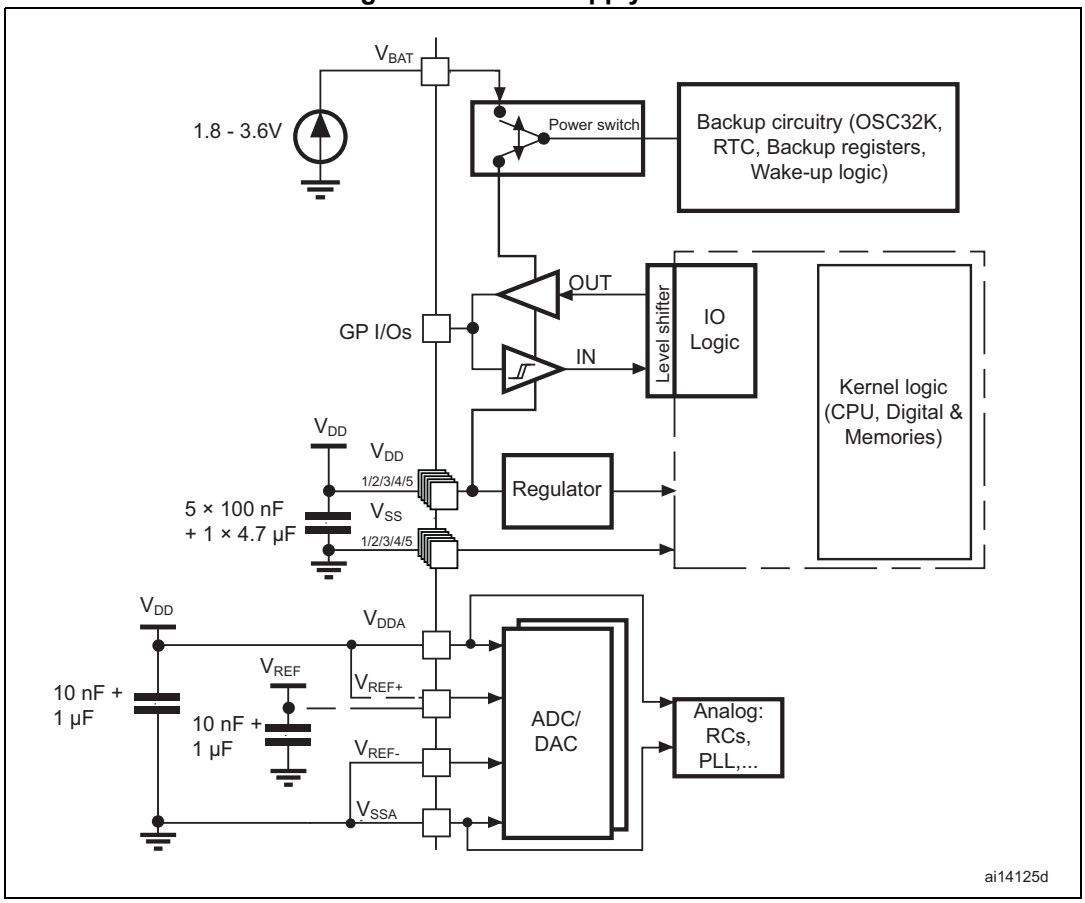

Caution: In *Figure 14*, the 4.7 µF capacitor must be connected to V_{DD3}.

5.1.7 Current consumption measurement

Figure 15. Current consumption measurement scheme

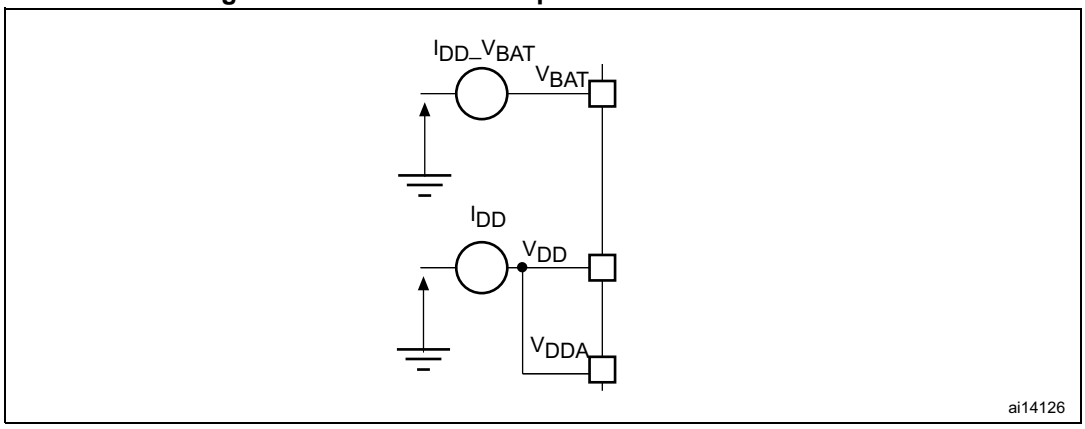

5.2 Absolute maximum ratings

Stresses above the absolute maximum ratings listed in *Table 6*, *Table 7*, and *Table 8* may cause permanent damage to the device. These are stress ratings only and functional operation of the device at these conditions is not implied. Exposure to maximum rating conditions for extended periods may affect device reliability.

Table 6. Voltage characteristics

Symbol	Ratings	Min	Max	Unit
$V_{DD} - V_{SS}$	External main supply voltage (including V_{DDA} and V_{DD})(1)	–0.3	4.0	V
V_{IN}(2)	Input voltage on 5 V tolerant pin	V_{SS} –0.3	V_{DD} +4.0	
	Input voltage on any other pin	V_{SS} –0.3	4.0	
$\|\Delta V_{DDx}\|$	Variations between different V_{DD} power pins	-	50	mV
$\|V_{SSX} - V_{SS}\|$	Variations between all the different ground pins	-	50	
$V_{ESD(HBM)}$	Electrostatic discharge voltage (human body model)	See *Section 5.3.11*		

1. All main power (V_{DD}, V_{DDA}) and ground (V_{SS}, V_{SSA}) pins must always be connected to the external power supply, in the permitted range.
2. V_{IN} maximum must always be respected. Refer to *Table 7* for the maximum allowed injected current values.

Table 7. Current characteristics

Symbol	Ratings	Max.	Unit
I_{VDD}	Total current into V_{DD}/V_{DDA} power lines (source)(1)	150	mA
I_{VSS}	Total current out of V_{SS} ground lines (sink)(1)	150	
I_{IO}	Output current sunk by any I/O and control pin	25	
	Output current source by any I/Os and control pin	–25	
$I_{INJ(PIN)}$(2)	Injected current on five volt tolerant pins(3)	-5/+0	
	Injected current on any other pin(4)	± 5	
$\Sigma I_{INJ(PIN)}$	Total injected current (sum of all I/O and control pins)(5)	± 25	

1. All main power (V_{DD}, V_{DDA}) and ground (V_{SS}, V_{SSA}) pins must always be connected to the external power supply, in the permitted range.
2. Negative injection disturbs the analog performance of the device. See footnote *2* of *Table 49*.
3. Positive injection is not possible on these I/Os. A negative injection is induced by $V_{IN}<V_{SS}$. $I_{INJ(PIN)}$ must never be exceeded. Refer to *Table 6* for the maximum allowed input voltage values.
4. A positive injection is induced by $V_{IN} > V_{DD}$, while a negative injection is induced by $V_{IN} < V_{SS}$. $I_{INJ(PIN)}$ must never be exceeded. Refer to *Table 6* for the maximum allowed input voltage values.
5. When several inputs are submitted to a current injection, the maximum $\Sigma I_{INJ(PIN)}$ is the absolute sum of the positive and negative injected currents (instantaneous values).

Table 8. Thermal characteristics

Symbol	Ratings	Value	Unit
T_{STG}	Storage temperature range	–65 to +150	°C
T_J	Maximum junction temperature	150	

5.3 Operating conditions

5.3.1 General operating conditions

Table 9. General operating conditions

Symbol	Parameter	Conditions		Min	Max	Unit
f_{HCLK}	Internal AHB clock frequency	-		0	72	MHz
f_{PCLK1}	Internal APB1 clock frequency	-		0	36	
f_{PCLK2}	Internal APB2 clock frequency	-		0	72	
V_{DD}	Standard operating voltage	-		2	3.6	V
V_{DDA}(1)	Analog operating voltage (ADC not used)	Must be the same potential as V_{DD}(2)		2	3.6	
	Analog operating voltage (ADC used)			2.4	3.6	
V_{BAT}	Backup operating voltage	-		1.8	3.6	
V_{IN}	I/O input voltage	Standard IO		–0.3	V_{DD}+ 0.3	V
		FT IO(3)	2 V < V_{DD} ≤ 3.6 V	–0.3	5.5	
			V_{DD} = 2 V	–0.3	5.2	
		BOOT0		0	5.5	
P_D	Power dissipation at T_A = 85 °C for suffix 6 or T_A = 105 °C for suffix 7(4)	LFBGA100		-	454	mW
		LQFP100		-	434	
		UFBGA100		-	339	
		TFBGA64		-	308	
		LQFP64		-	444	
		LQFP48		-	363	
		UFQFPN48		-	624	
		VFQFPN36		-	1000	
T_A	Ambient temperature for 6 suffix version	Maximum power dissipation		–40	85	°C
		Low-power dissipation(5)		–40	105	
	Ambient temperature for 7 suffix version	Maximum power dissipation		–40	105	
		Low-power dissipation(5)		–40	125	
T_J	Junction temperature range	6 suffix version		–40	105	
		7 suffix version		–40	125	

1. When the ADC is used, refer to *Table 47*.
2. It is recommended to power V_{DD} and V_{DDA} from the same source. A maximum difference of 300 mV between V_{DD} and V_{DDA} can be tolerated during power-up and operation.
3. To sustain a voltage higher than V_{DD} + 0.3 V, the internal pull-up/pull-down resistors must be disabled.
4. If T_A is lower, higher P_D values are allowed as long as T_J does not exceed $T_J$max (see *Section 6.10*).
5. In low-power dissipation state, T_A can be extended to this range as long as T_J does not exceed $T_J$max (see *Section 6.10*).

5.3.2 Operating conditions at power-up / power-down

Subject to general operating conditions for T_A.

Table 10. Operating conditions at power-up / power-down

Symbol	Parameter	Conditions	Min	Max	Unit
t_{VDD}	V_{DD} rise time rate	-	0	∞	µs/V
	V_{DD} fall time rate		20	∞	

5.3.3 Embedded reset and power control block characteristics

The parameters given in *Table 11* are derived from tests performed under ambient temperature and V_{DD} supply voltage conditions summarized in *Table 9*.

Table 11. Embedded reset and power control block characteristics

Symbol	Parameter	Conditions	Min	Typ	Max	Unit
V_{PVD}	Programmable voltage detector level selection	PLS[2:0] = 000 (rising edge)	2.10	2.18	2.26	V
		PLS[2:0] = 000 (falling edge)	2,00	2.08	2.16	
		PLS[2:0] = 001 (rising edge)	2.19	2.28	2.37	
		PLS[2:0] = 001 (falling edge)	2.09	2.18	2.27	
		PLS[2:0] = 010 (rising edge)	2.28	2.38	2.48	
		PLS[2:0] = 010 (falling edge)	2.18	2.28	2.38	
		PLS[2:0] = 011 (rising edge)	2.38	2.48	2.58	
		PLS[2:0] = 011 (falling edge)	2.28	2.38	2.48	
		PLS[2:0] = 100 (rising edge)	2.47	2.58	2.69	
		PLS[2:0] = 100 (falling edge)	2.37	2.48	2.59	
		PLS[2:0] = 101 (rising edge)	2.57	2.68	2.79	
		PLS[2:0] = 101 (falling edge)	2.47	2.58	2.69	
		PLS[2:0] = 110 (rising edge)	2.66	2.78	2.90	
		PLS[2:0] = 110 (falling edge)	2.56	2.68	2.80	
		PLS[2:0] = 111 (rising edge)	2.76	2.88	3.00	
		PLS[2:0] = 111 (falling edge)	2.66	2.78	2.90	
$V_{PVDhyst}$(2)	PVD hysteresis	-	-	100	-	mV
$V_{POR/PDR}$	Power on/power down reset threshold	Falling edge	1.8(1)	1.88	1.96	V
		Rising edge	1.84	1.92	2.0	
$V_{PDRhyst}$(2)	PDR hysteresis	-	-	40	-	mV
$T_{RSTTEMPO}$(2)	Reset temporization	-	1.0	2.5	4.5	ms

1. The product behavior is specified by design down to the minimum $V_{POR/PDR}$ value.
2. Specified by design, not tested in production.

5.3.4 Embedded reference voltage

The parameters given in *Table 12* are derived from tests performed under ambient temperature and V_{DD} supply voltage conditions summarized in *Table 9*.

Table 12. Embedded internal reference voltage

Symbol	Parameter	Conditions	Min	Typ	Max	Unit
V_{REFINT}	Internal reference voltage	–40 °C < T_A < +105 °C	1.16	1.20	1.26	V
		–40 °C < T_A < +85 °C	1.16	1.20	1.24	
$T_{S_vrefint}$(1)	ADC sampling time when reading the internal reference voltage	-	-	5.1	17.1(2)	µs
V_{RERINT}(2)	Internal reference voltage spread over the temperature range	V_{DD} = 3 V ±10 mV	-	-	10	mV
T_{Coeff}(2)	Temperature coefficient	-	-	-	100	ppm/°C

1. Shortest sampling time can be determined in the application by multiple iterations.
2. Specified by design, not tested in production.

5.3.5 Supply current characteristics

The current consumption is a function of several parameters and factors such as operating voltage, ambient temperature, I/O pin loading, device software configuration, operating frequencies, I/O pin switching rate, program location in memory, and executed binary code.

The current consumption is measured as described in *Figure 15*.

All Run-mode current consumption measurements given in this section are performed with a reduced code that gives a consumption equivalent to Dhrystone 2.1 code.

Maximum current consumption

The MCU is placed under the following conditions:

- All I/O pins are in input mode with a static value at V_{DD} or V_{SS} (no load)
- All peripherals are disabled except when explicitly mentioned
- The flash memory access time is adjusted to the f_{HCLK} frequency (0 wait state from 0 to 24 MHz, one wait state from 24 to 48 MHz and two wait states above)
- Prefetch in ON (reminder: this bit must be set before clock setting and bus prescaling)
- When the peripherals are enabled $f_{PCLK1} = f_{HCLK}/2$, $f_{PCLK2} = f_{HCLK}$

The parameters given in *Table 13*, *Table 14* and *Table 15* are derived from tests performed under ambient temperature and V_{DD} supply voltage conditions summarized in *Table 9*.

Table 13. Maximum current consumption in Run mode, code with data processing running from Flash

Symbol	Parameter	Conditions	f_{HCLK}	Max(1)		Unit
				T_A = 85 °C	T_A = 105 °C	
I_{DD}	Supply current in Run mode	External clock(2), all peripherals enabled	72 MHz	50.0	50.3	mA
			48 MHz	36.1	36.2	
			36 MHz	28.6	28.7	
			24 MHz	19.9	20.1	
			16 MHz	14.7	14.9	
			8 MHz	8.6	8.9	
		External clock(2), all peripherals disabled	72 MHz	32.8	32.9	
			48 MHz	24.4	24.5	
			36 MHz	19.8	19.9	
			24 MHz	13.9	14.2	
			16 MHz	10.7	11.0	
			8 MHz	6.8	7.1	

1. Evaluated by characterization, not tested in production, unless otherwise specified.
2. External clock is 8 MHz and PLL is on when f_{HCLK} > 8 MHz.

Table 14. Maximum current consumption in Run mode, code with data processing running from RAM

Symbol	Parameter	Conditions	f_{HCLK}	Max(1)		Unit
				T_A = 85 °C	T_A = 105 °C	
I_{DD}	Supply current in Run mode	External clock(2), all peripherals enabled	72 MHz	48	50	mA
			48 MHz	31.5	32	
			36 MHz	24	25.5	
			24 MHz	17.5	18	
			16 MHz	12.5	13	
			8 MHz	7.5	8	
		External clock(2), all peripherals disabled	72 MHz	29	29.5	
			48 MHz	20.5	21	
			36 MHz	16	16.5	
			24 MHz	11.5	12	
			16 MHz	8.5	9	
			8 MHz	5.5	6	

1. Based on characterization, tested in production at V_{DD} max, f_{HCLK} max.
2. External clock is 8 MHz and PLL is on when f_{HCLK} > 8 MHz.

Figure 16. Typical current consumption in Run mode versus frequency (at 3.6 V), code with data processing running from RAM, peripherals enabled

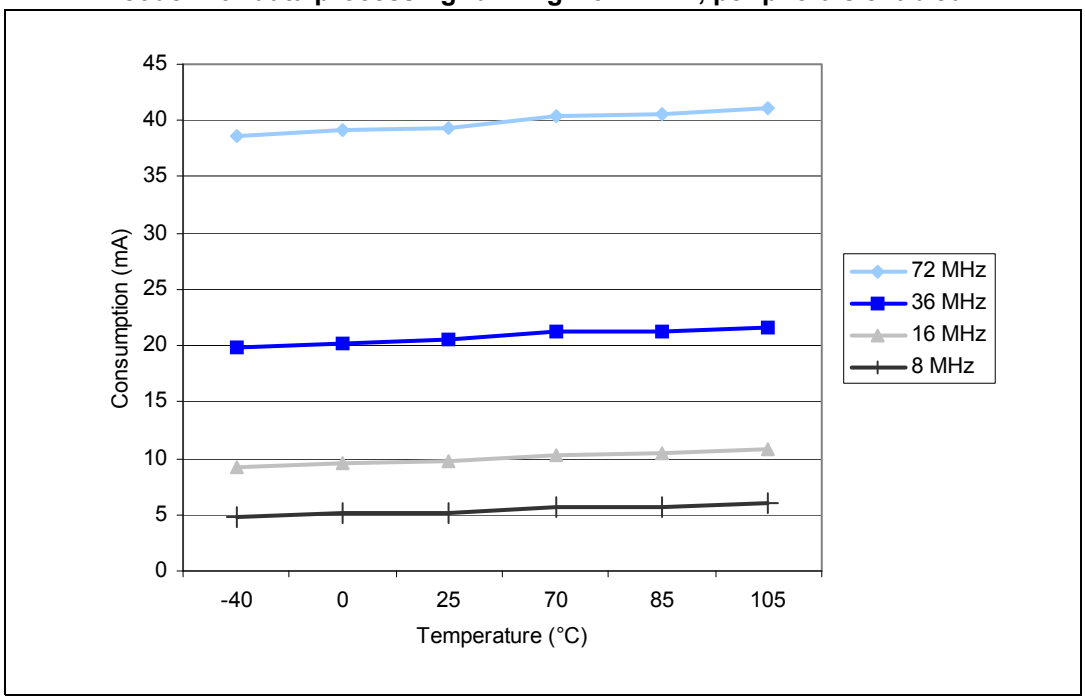

Figure 17. Typical current consumption in Run mode versus frequency (at 3.6 V), code with data processing running from RAM, peripherals disabled

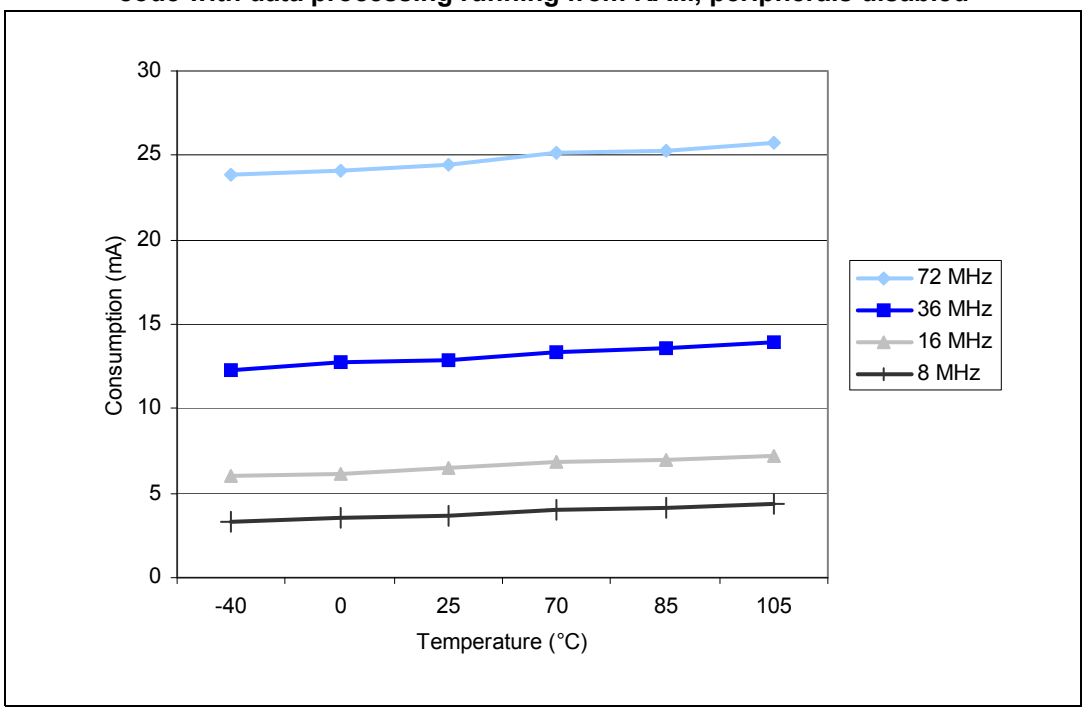

Table 15. Maximum current consumption in Sleep mode, code running from Flash or RAM

Symbol	Parameter	Conditions	f_{HCLK}	Max(1)		Unit
				T_A = 85 °C	T_A = 105 °C	
I_{DD}	Supply current in Sleep mode	External clock(2), all peripherals enabled	72 MHz	30	32	mA
			48 MHz	20	20.5	
			36 MHz	15.5	16	
			24 MHz	11.5	12	
			16 MHz	8.5	9	
			8 MHz	5.5	6	
		External clock(2), all peripherals disabled	72 MHz	7.5	8	
			48 MHz	6	6.5	
			36 MHz	5	5.5	
			24 MHz	4.5	5	
			16 MHz	4	4.5	
			8 MHz	3	4	

1. Based on characterization, tested in production at $V_{DD\ max}$, f_{HCLK} max with peripherals enabled.
2. External clock is 8 MHz and PLL is on when f_{HCLK} > 8 MHz.

Table 16. Typical and maximum current consumptions in Stop and Standby modes

Symbol	Parameter	Conditions	Typ(1)			Max		Unit
			V_{DD}/V_{BAT} = 2.0 V	V_{DD}/V_{BAT} = 2.4 V	V_{DD}/V_{BAT} = 3.3 V	T_A = 85 °C	T_A = 105 °C	
I_{DD}	Supply current in Stop mode	Regulator in Run mode, low-speed and high-speed internal RC oscillators and high-speed oscillator OFF (no independent watchdog)	-	23.5	24	200	370	µA
		Regulator in Low-power mode, low-speed and high-speed internal RC oscillators and high-speed oscillator OFF (no independent watchdog)	-	13.5	14	180	340	
	Supply current in Standby mode	Low-speed internal RC oscillator and independent watchdog ON	-	2.6	3.4	-	-	
		Low-speed internal RC oscillator ON, independent watchdog OFF	-	2.4	3.2	-	-	
		Low-speed internal RC oscillator and independent watchdog OFF, low-speed oscillator and RTC OFF	-	1.7	2	4	5	
I_{DD_VBAT}	Backup domain supply current	Low-speed oscillator and RTC ON	0.9	1.1	1.4	1.9(2)	2.2	

1. Typical values are measured at T_A = 25°C.
2. Evaluated by characterization, not tested in production, unless otherwise specified.

Figure 18. Typical current consumption on V_{BAT} (RTC on)

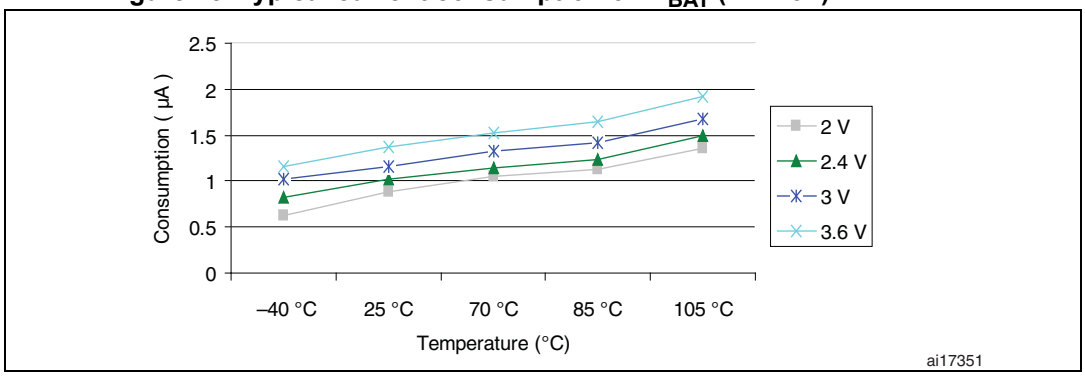

Figure 19. Typical current consumption in Stop mode, with regulator in Run mode

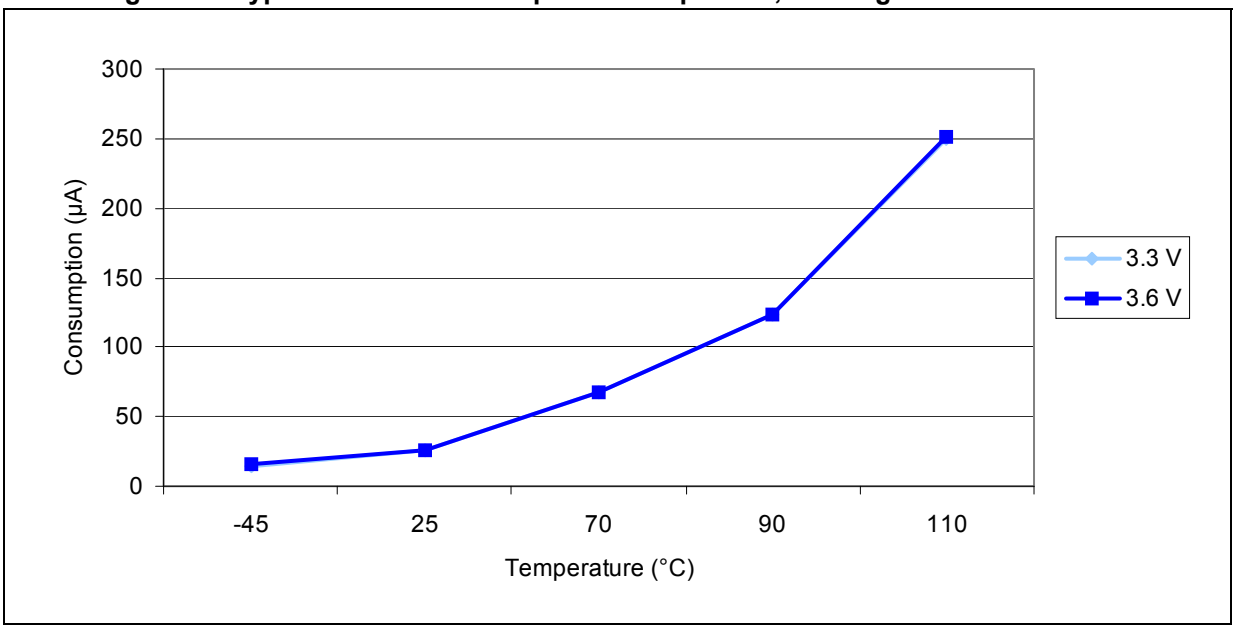

Figure 20. Typical current consumption in Stop mode, with regulator in Low-power mode

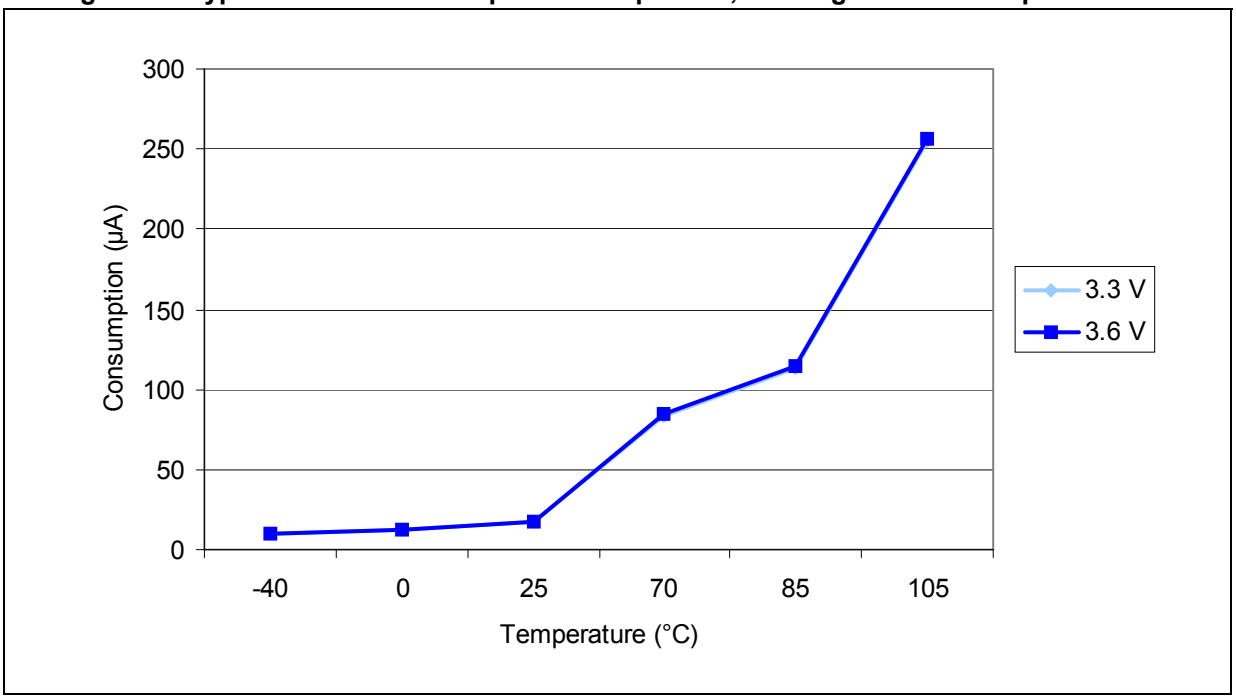

Figure 21. Typical current consumption in Standby mode

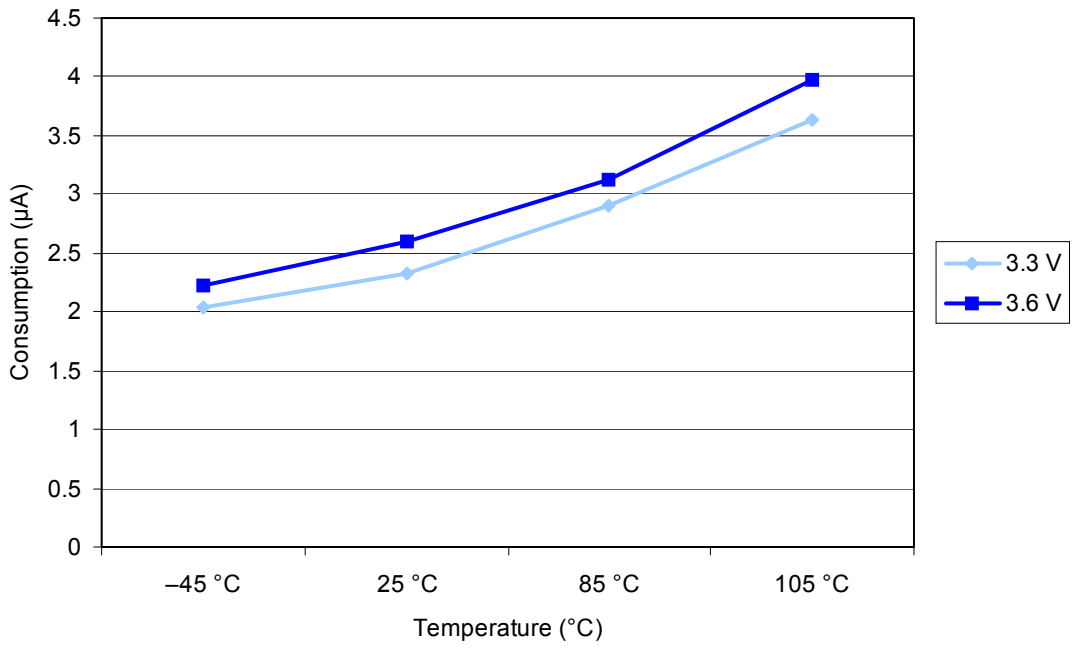

Typical current consumption

The MCU is placed under the following conditions:

- All I/O pins are in input mode with a static value at V_{DD} or V_{SS} (no load)
- All peripherals are disabled except if explicitly mentioned
- The flash access time is adjusted to f_{HCLK} frequency (0 wait state from 0 to 24 MHz, one wait state from 24 to 48 MHz and two wait states above)
- Ambient temperature and V_{DD} supply voltage conditions summarized in *Table 9*
- Prefetch is ON (this bit must be set before clock setting and bus prescaling)
- When the peripherals are enabled $f_{PCLK1} = f_{HCLK} / 4$, $f_{PCLK2} = f_{HCLK} / 2$, $f_{ADCCLK} = f_{PCLK2}/4$

Table 17. Typical current consumption in Run mode, code with data processing running from Flash

Symbol	Parameter	Conditions	f_{HCLK}	Typ(1)		Unit
				All peripherals enabled(2)	All peripherals disabled	
I_{DD}	Supply current in Run mode	External clock(3)	72 MHz	36	27	mA
			48 MHz	24.2	18.6	
			36 MHz	19.0	14.8	
			24 MHz	12.9	10.1	
			16 MHz	9.3	7.4	
			8 MHz	5.5	4.6	
			4 MHz	3.3	2.8	
			2 MHz	2.2	1.9	
			1 MHz	1.6	1.45	
			500 kHz	1.3	1.25	
			125 kHz	1.08	1.06	
		Running on high speed internal RC (HSI), AHB prescaler used to reduce the frequency	64 MHz	31.4	23.9	mA
			48 MHz	23.5	17.9	
			36 MHz	18.3	14.1	
			24 MHz	12.2	9.5	
			16 MHz	8.5	6.8	
			8 MHz	4.9	4.0	
			4 MHz	2.7	2.2	
			2 MHz	1.6	1.4	
			1 MHz	1.02	0.9	
			500 kHz	0.73	0.67	
			125 kHz	0.5	0.48	

1. Typical values are measures at T_A = 25°C, V_{DD} = 3.3 V.
2. Add an additional power consumption of 0.8 mA per ADC for the analog part. In applications, this consumption occurs only while the ADC is on (ADON bit is set in the ADC_CR2 register).
3. External clock is 8 MHz and PLL is on when f_{HCLK} > 8 MHz.

Table 18. Typical current consumption in Sleep mode, code running from Flash or RAM

Symbol	Parameter	Conditions	f_{HCLK}	Typ(1)		Unit
				All peripherals enabled(2)	All peripherals disabled	
I_{DD}	Supply current in Sleep mode	External clock(3)	72 MHz	14.4	5.5	mA
			48 MHz	9.9	3.9	
			36 MHz	7.6	3.1	
			24 MHz	5.3	2.3	
			16 MHz	3.8	1.8	
			8 MHz	2.1	1.2	
			4 MHz	1.6	1.1	
			2 MHz	1.3	1.0	
			1 MHz	1.11	0.98	
			500 kHz	1.04	0.96	
			125 kHz	0.98	0.95	
		Running on high speed internal RC (HSI), AHB prescaler used to reduce the frequency	64 MHz	12.3	4.4	
			48 MHz	9.3	3.3	
			36 MHz	7	2.5	
			24 MHz	4.8	1.8	
			16 MHz	3.2	1.2	
			8 MHz	1.6	0.6	
			4 MHz	1.0	0.5	
			2 MHz	0.72	0.47	
			1 MHz	0.56	0.44	
			500 kHz	0.49	0.42	
			125 kHz	0.43	0.41	

1. Typical values are measures at T_A = 25°C, V_{DD} = 3.3 V.
2. Add an additional power consumption of 0.8 mA per ADC for the analog part. In applications, this consumption occurs only while the ADC is on (ADON bit is set in the ADC_CR2 register).
3. External clock is 8 MHz and PLL is on when f_{HCLK} > 8 MHz.

On-chip peripheral current consumption

The current consumption of the on-chip peripherals is given in *Table 19*. The MCU is put under the following conditions:

- all I/O pins are in input mode with a static value at V_{DD} or V_{SS} (no load)
- all peripherals are disabled unless otherwise mentioned
- the given value is calculated by measuring the current consumption
  - with all peripherals clocked off
  - with only one peripheral clocked on
- ambient operating temperature and V_{DD} supply voltage conditions summarized in *Table 6*

Table 19. Peripheral current consumption

Peripherals		µA/MHz
AHB (up to 72 MHz)	DMA1	16.53
	BusMatrix(1)	8.33
APB1 (up to 36 MHz)	APB1-Bridge	10.28
	TIM2	32.50
	TIM3	31.39
	TIM4	31.94
	SPI2	4.17
	USART2	12.22
	USART3	12.22
	I2C1	10.00
	I2C2	10.00
	USB	17.78
	CAN1	18.06
	WWDG	2.50
	PWR	1.67
	BKP	2.50
	IWDG	11.67

Table 19. Peripheral current consumption (continued)

Peripherals		µA/MHz
APB2 (up to 72 MHz)	APB2-Bridge	3.75
	GPIOA	6.67
	GPIOB	6.53
	GPIOC	6.53
	GPIOD	6.53
	GPIOE	6.39
	SPI1	4.72
	USART1	11.94
	TIM1	23.33
	ADC1(2)	17.50
	ADC2(2)	16.07

1. The BusMatrix is automatically active when at least one master peripheral is ON (CPU or DMA).
2. Specific conditions for measuring ADC current consumption: f_{HCLK} = 56 MHz, f_{APB1} = f_{HCLK} / 2, f_{APB2} = f_{HCLK}, f_{ADCCLK} = f_{APB2} / 4, When ADON bit in the ADCx_CR2 register is set to 1, a current consumption of analog part equal to 0.65 mA must be added for each ADC.

5.3.6 External clock source characteristics

High-speed external user clock generated from an external source

The characteristics given in *Table 20* result from tests performed using a high-speed external clock source, and under ambient temperature and supply voltage conditions summarized in *Table 9*.

Table 20. High-speed external user clock characteristics

Symbol	Parameter	Conditions	Min	Typ	Max	Unit
f_{HSE_ext}	User external clock source frequency(1)	-	1	8	25	MHz
V_{HSEH}	OSC_IN input pin high level voltage		$0.7V_{DD}$	-	V_{DD}	V
V_{HSEL}	OSC_IN input pin low level voltage		V_{SS}	-	$0.3V_{DD}$	
$t_{w(HSE)}$ $t_{w(HSE)}$	OSC_IN high or low time(1)		5	-	-	ns
$t_{r(HSE)}$ $t_{f(HSE)}$	OSC_IN rise or fall time(1)		-	-	20	
$C_{in(HSE)}$	OSC_IN input capacitance(1)	-	-	5	-	pF
$DuCy_{(HSE)}$	Duty cycle	-	45	-	55	%
I_L	OSC_IN Input leakage current	$V_{SS} \leq V_{IN} \leq V_{DD}$	-	-	±1	µA

1. Specified by design, not tested in production.

Low-speed external user clock generated from an external source

The characteristics given in *Table 21* result from tests performed using a low-speed external clock source, and under ambient temperature and supply voltage conditions summarized in *Table 9*.

Table 21. Low-speed external user clock characteristics

Symbol	Parameter	Conditions	Min	Typ	Max	Unit
f_{LSE_ext}	User external clock source frequency(1)	-		32.768	1000	kHz
V_{LSEH}	OSC32_IN input pin high level voltage		$0.7V_{DD}$	-	V_{DD}	V
V_{LSEL}	OSC32_IN input pin low level voltage		V_{SS}	-	$0.3V_{DD}$	
$t_{w(LSE)}$ $t_{w(LSE)}$	OSC32_IN high or low time(1)		450	-	-	ns
$t_{r(LSE)}$ $t_{f(LSE)}$	OSC32_IN rise or fall time(1)		-	-	50	
$C_{in(LSE)}$	OSC32_IN input capacitance(1)	-	-	5	-	pF
$DuCy_{(LSE)}$	Duty cycle	-	30	-	70	%
I_L	OSC32_IN Input leakage current	$V_{SS} \leq V_{IN} \leq V_{DD}$	-	-	±1	µA

1. Specified by design, not tested in production.

Figure 22. High-speed external clock source AC timing diagram

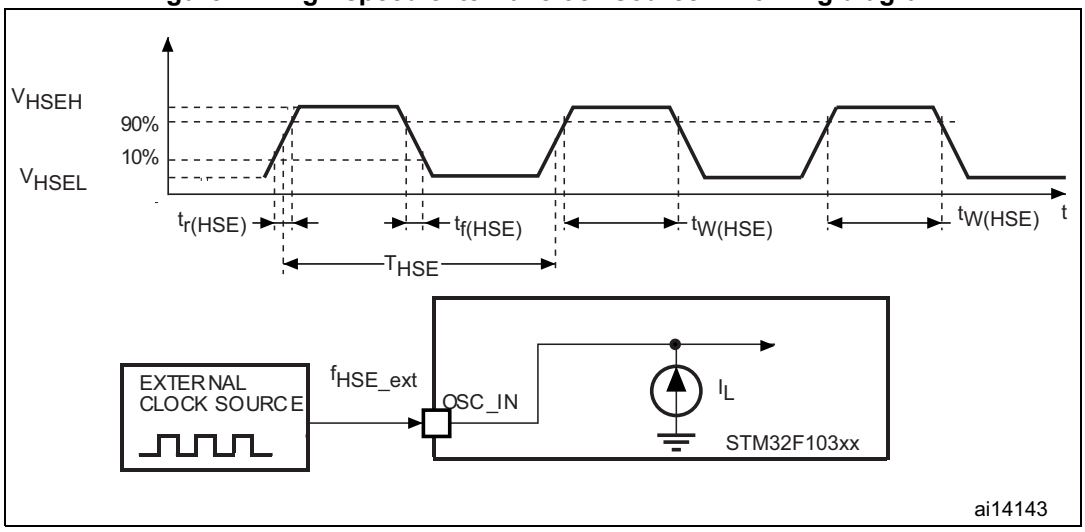

Figure 23. Low-speed external clock source AC timing diagram

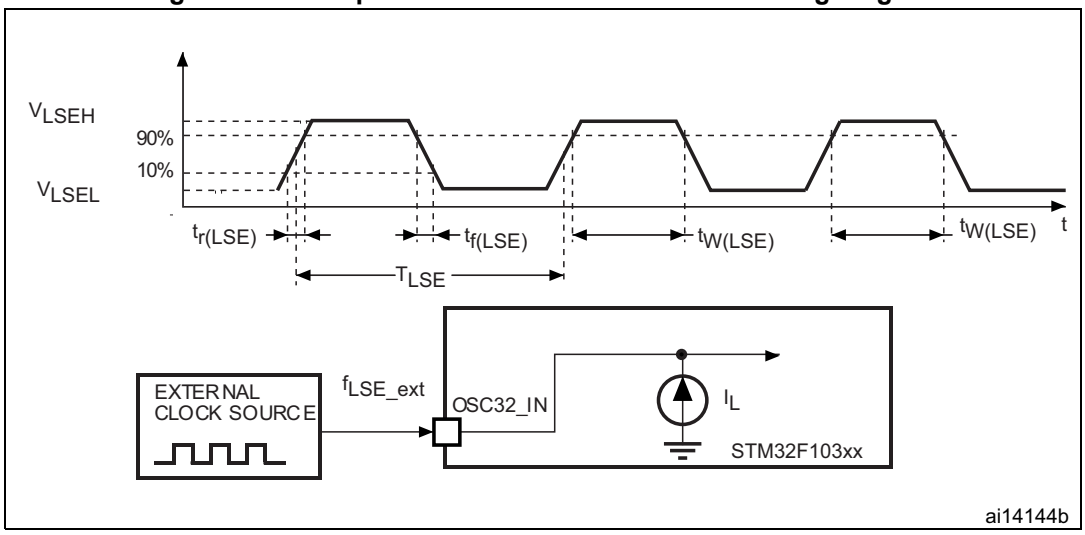

High-speed external clock generated from a crystal/ceramic resonator

The high-speed external (HSE) clock can be supplied with a 4 to 16 MHz crystal/ceramic resonator oscillator. All the information given in this paragraph is based on characterization results obtained with typical external components specified in *Table 22*. In the application, the resonator and the load capacitors have to be placed as close as possible to the oscillator pins in order to minimize output distortion and startup stabilization time. Refer to the crystal resonator manufacturer for more details on the resonator characteristics (frequency, package, accuracy).

Table 22. HSE 4-16 MHz oscillator characteristics(1) (2)

Symbol	Parameter	Conditions	Min	Typ	Max	Unit
f_{OSC_IN}	Oscillator frequency	-	4	8	16	MHz
R_F	Feedback resistor	-	-	200	-	kΩ
i_2	HSE driving current	V_{DD} = 3.3 V, V_{IN} = V_{SS} with 30 pF load	-	-	1	mA
g_m	Oscillator transconductance	Startup	25	-	-	mA/V
$t_{SU(HSE}$(3)	Startup time	V_{DD} is stabilized	-	2	-	ms

1. Resonator characteristics given by the crystal/ceramic resonator manufacturer.
2. Evaluated by characterization, not tested in production, unless otherwise specified.
3. $t_{SU(HSE)}$ is the startu.p time measured from the moment it is enabled (by software) to a stabilized 8 MHz oscillation is reached. This value is measured for a standard crystal resonator and it can vary significantly with the crystal manufacturer

For C_{L1} and C_{L2}, it is recommended to use high-quality external ceramic capacitors in the 5 pF to 25 pF range (typ.), designed for high-frequency applications, and selected to match the requirements of the crystal or resonator (see *Figure 24*). C_{L1} and C_{L2} are usually the same size. The crystal manufacturer typically specifies a load capacitance that is the series combination of C_{L1} and C_{L2}. PCB and MCU pin capacitance must be included (10 pF can be used as a rough estimate of the combined pin and board capacitance) when sizing C_{L1} and

C_{L2}. Refer to AN2867 "*Oscillator design guide for ST microcontrollers*", available from the STMicroelectronics website *www.st.com*.

Figure 24. Typical application with an 8 MHz crystal

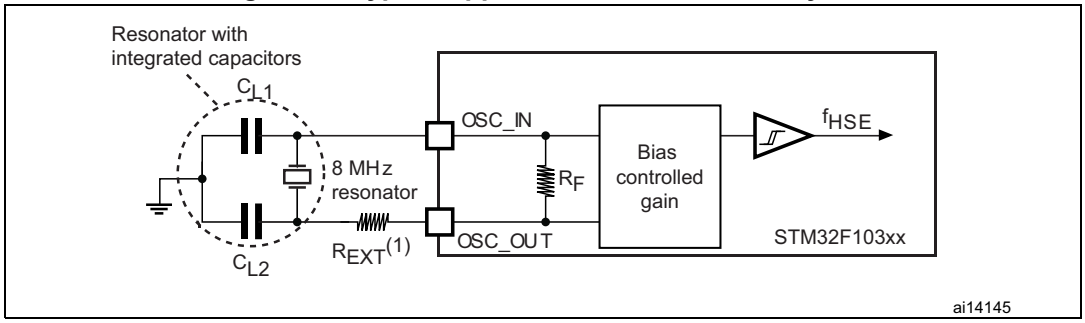

1. R_{EXT} value depends on the crystal characteristics.

Low-speed external clock generated from a crystal/ceramic resonator

The low-speed external (LSE) clock can be supplied with a 32.768 kHz crystal/ceramic resonator oscillator. All the information given in this paragraph is based on characterization results obtained with typical external components specified in *Table 23*. In the application, the resonator and the load capacitors have to be placed as close as possible to the oscillator pins tortion and startup stabilization time. Refer to the crystal resonator manufacturer for more details on the resonator characteristics (frequency, package, accuracy).

Table 23. LSE oscillator characteristics (f_{LSE} = 32.768 kHz)(1) (2)

Symbol	Parameter	Conditions		Min	Typ	Max	Unit
R_F	Feedback resistor	-		-	5	-	MΩ
I_2	LSE driving current	V_{DD} = 3.3 V, V_{IN} = V_{SS}		-	-	1.4	µA
g_m	Oscillator transconductance	-		5	-	-	µA/V
$t_{SU(LSE)}$(3)	Startup time	V_{DD} is stabilized	T_A = 50 °C	-	1.5	-	s
			T_A = 25 °C	-	2.5	-	
			T_A = 10 °C	-	4	-	
			T_A = 0 °C	-	6	-	
			T_A = -10 °C	-	10	-	
			T_A = -20 °C	-	17	-	
			T_A = -30 °C	-	32	-	
			T_A = -40 °C	-	60	-	

1. Evaluated by characterization, not tested in production, unless otherwise specified.
2. Refer to the note and caution paragraphs below the table, and to AN2867 "*Oscillator design guide for ST microcontrollers*".
3. $t_{SU(LSE)}$ is the startup time measured from the moment it is enabled (by softwinformation given in this paragraph is) to a stabilized 32.768 kHz oscillation is reached. This value is measured for a standard crystal and it can vary significantly with the crystal manufacturer

Note: For C_{L1} and C_{L2} it is recommended to use high-quality ceramic capacitors in the 5 to 15 pF range selected to match the requirements of the crystal or resonator. C_{L1} and $C_{L2,}$ are

usually the same size. The crystal manufacturer typically specifies a load capacitance, which is the series combination of C_{L1} and C_{L2}.
Load capacitance C_L has the following formula: $C_L = C_{L1} \times C_{L2} / (C_{L1} + C_{L2}) + C_{stray}$, where C_{stray} is the pin capacitance and board or trace PCB-related capacitance. Typically, it is between 2 and 7 pF.

Caution: To avoid exceeding the maximum value of C_{L1} and C_{L2} (15 pF) it is strongly recommended to use a resonator with a load capacitance $C_L \leq 7$ pF. Never use a resonator with a load capacitance of 12.5 pF.
Example: when choosing a resonator with a load capacitance of C_L = 6 pF and C_{stray} = 2 pF, then $C_{L1} = C_{L2}$ = 8 pF.

Figure 25. Typical application with a 32.768 kHz crystal

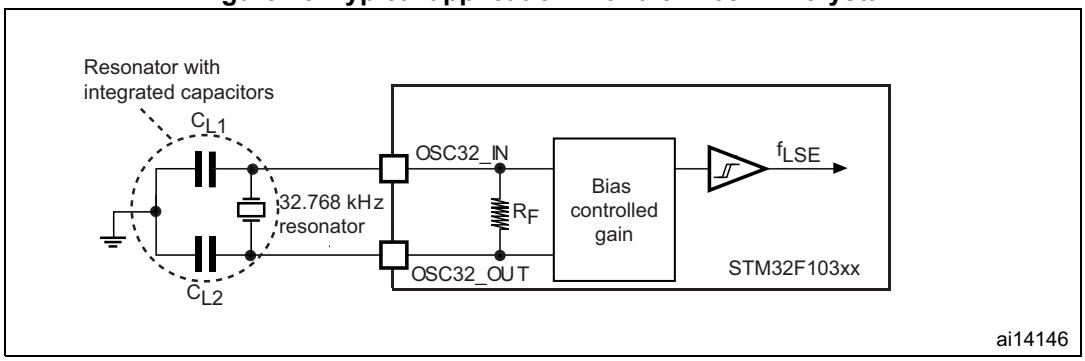

5.3.7 Internal clock source characteristics

The parameters given in *Table 24* are derived from tests performed under ambient temperature and V_{DD} supply voltage conditions summarized in *Table 9*.

High-speed internal (HSI) RC oscillator

Table 24. HSI oscillator characteristics(1)

Symbol	Parameter	Conditions		Min	Typ	Max	Unit
f_{HSI}	Frequency	-		-	8	-	MHz
$DuCy_{(HSI)}$	Duty cycle	-		45	-	55	%
ACC_{HSI}	Accuracy of the HSI oscillator	User-trimmed with the RCC_CR register(2)		-	-	1(3)	%
		Factory-calibrated (4)(5)	T_A = –40 to 105 °C	–2	-	2.5	%
			T_A = –10 to 85 °C	–1.5	-	2.2	%
			T_A = 0 to 70 °C	–1.3	-	2	%
			T_A = 25 °C	–1.1	-	1.8	%
$t_{su(HSI)}$(4)	HSI oscillator startup time	-		1	-	2	µs
$I_{DD(HSI)}$(4)	HSI oscillator power consumption	-		-	80	100	µA

1. V_{DD} = 3.3 V, T_A = –40 to 105 °C unless otherwise specified.
2. Refer to AN2868 "*STM32F10xxx internal RC oscillator (HSI) calibration*" available from *www.st.com*.

3. Specified by design, not tested in production.
4. Evaluated by characterization, not tested in production, unless otherwise specified.
5. The actual frequency of HSI oscillator may be impacted by a reflow, but does not drift out of the specified range.

Low-speed internal (LSI) RC oscillator

Table 25. LSI oscillator characteristics (1)

Symbol	Parameter	Min	Typ	Max	Unit
f_{LSI}(2)	Frequency	30	40	60	kHz
$t_{su(LSI)}$(3)	LSI oscillator startup time	-	-	85	µs
$I_{DD(LSI)}$(3)	LSI oscillator power consumption	-	0.65	1.2	µA

1. V_{DD} = 3 V, T_A = –40 to 105°C unless otherwise specified.
2. Evaluated by characterization, not tested in production, unless otherwise specified.
3. Specified by design, not tested in production.

Wakeup time from low-power mode

The wakeup times given in *Table 26* are measured on a wakeup phase with an 8-MHz HSI RC oscillator. The clock source used to wake up the device depends from the current operating mode:

- Stop or Standby mode: the clock source is the RC oscillator
- Sleep mode: the clock source is the clock that was set before entering Sleep mode.

All timings are derived from tests performed under ambient temperature and V_{DD} supply voltage conditions summarized in *Table 9*.

Table 26. Low-power mode wakeup timings

Symbol	Parameter	Typ	Unit
$t_{WUSLEEP}$(1)	Wakeup from Sleep mode	1.8	µs
t_{WUSTOP}(1)	Wakeup from Stop mode (regulator in run mode)	3.6	
	Wakeup from Stop mode (regulator in low-power mode)	5.4	
$t_{WUSTDBY}$(1)	Wakeup from Standby mode	50	

1. The wakeup times are measured from the wakeup event to the point in which the user application code reads the first instruction.

5.3.8 PLL characteristics

The parameters given in *Table 27* are derived from tests performed under ambient temperature and V_{DD} supply voltage conditions summarized in *Table 9*.

Table 27. PLL characteristics

Symbol	Parameter	Value			Unit
		Min(1)	Typ	Max(1)	
f_{PLL_IN}	PLL input clock(2)	1	8.0	25	MHz
	PLL input clock duty cycle	40	-	60	%
f_{PLL_OUT}	PLL multiplier output clock	16	-	72	MHz
t_{LOCK}	PLL lock time	-	-	200	µs
Jitter	Cycle-to-cycle jitter	-	-	300	ps

1. Evaluated by characterization, not tested in production, unless otherwise specified.
2. Take care of using the appropriate multiplier factors so as to have PLL input clock values compatible with the range defined by f_{PLL_OUT}.

5.3.9 Memory characteristics

Flash memory

The characteristics are given at T_A = –40 to 105°C unless otherwise specified.

Table 28. Flash memory characteristics

Symbol	Parameter	Conditions	Min(1)	Typ	Max(1)	Unit
t_{prog}	16-bit programming time	T_A = –40 to +105 °C	40	52.5	70	µs
t_{ERASE}	Page (1 KB) erase time	T_A = –40 to +105 °C	20	-	40	ms
t_{ME}	Mass erase time	T_A = –40 to +105 °C	20	-	40	

Table 28. Flash memory characteristics (continued)

Symbol	Parameter	Conditions	Min(1)	Typ	Max(1)	Unit
I_{DD}	Supply current	Read mode f_{HCLK} = 72 MHz with two wait states, V_{DD} = 3.3 V	-	-	20	mA
		Write / Erase modes f_{HCLK} = 72 MHz, V_{DD} = 3.3 V	-	-	5	
		Power-down mode / Halt, V_{DD} = 3.0 to 3.6 V	-	-	50	µA
V_{prog}	Programming voltage	-	2	-	3.6	V

1. Specified by design, not tested in production.

Table 29. Flash memory endurance and data retention

Symbol	Parameter	Conditions	Value			Unit
			Min(1)	Typ	Max	
N_{END}	Endurance	T_A = –40 to +85 °C (6 suffix versions) T_A = –40 to +105 °C (7 suffix versions)	10	-	-	kcycles
t_{RET}	Data retention	1 kcycle(2) at T_A = 85 °C	30	-	-	Years
		1 kcycle(2) at T_A = 105 °C	10	-	-	
		10 kcycles(2) at T_A = 55 °C	20	-	-	

1. Evaluated by characterization, not tested in production, unless otherwise specified.
2. Cycling performed over the whole temperature range.

5.3.10 EMC characteristics

Susceptibility tests are performed on a sample basis during device characterization.

Functional EMS (electromagnetic susceptibility)

While a simple application is executed on the device (toggling 2 LEDs through I/O ports). the device is stressed by two electromagnetic events until a failure occurs. The failure is indicated by the LEDs:

- **Electrostatic discharge (ESD)** (positive and negative) is applied to all device pins until a functional disturbance occurs. This test is compliant with the IEC 61000-4-2 standard.
- **FTB**: A Burst of Fast Transient voltage (positive and negative) is applied to V_{DD} and V_{SS} through a 100 pF capacitor, until a functional disturbance occurs. This test is compliant with the IEC 61000-4-4 standard.

A device reset allows normal operations to be resumed.

The test results are given in *Table 30*. They are based on the EMS levels and classes defined in application note AN1709, available on *www.st.com*.

Table 30. EMS characteristics

Symbol	Parameter	Conditions	Level/Class
V_{FESD}	Voltage limits to be applied on any I/O pin to induce a functional disturbance	V_{DD} = 3.3 V, T_A = +25 °C, f_{HCLK} = 72 MHz conforms to IEC 61000-4-2	2B
V_{EFTB}	Fast transient voltage burst limits to be applied through 100 pF on V_{DD} and V_{SS} pins to induce a functional disturbance	V_{DD} = 3.3 V, T_A = +25 °C, f_{HCLK} = 72 MHz conforms to IEC 61000-4-4	4A

Designing hardened software to avoid noise problems

EMC characterization and optimization are performed at component level with a typical application environment and simplified MCU software. It should be noted that good EMC performance is highly dependent on the user application and the software in particular.

Therefore it is recommended that the user applies EMC software optimization and prequalification tests in relation with the EMC level requested for his application.

Software recommendations

The software flow must include the management of runaway conditions such as:

- Corrupted program counter
- Unexpected reset
- Critical data corruption (control registers...)

Prequalification trials

Most of the common failures (unexpected reset and program counter corruption) can be reproduced by manually forcing a low state on the NRST pin or the Oscillator pins for 1 second.

To complete these trials, ESD stress can be applied directly on the device, over the range of specification values. When unexpected behavior is detected, the software can be hardened to prevent unrecoverable errors occurring (see application note AN1015, available on *www.st.com*).

Electromagnetic Interference (EMI)

The electromagnetic field emitted by the device are monitored while a simple application is executed (toggling 2 LEDs through the I/O ports). This emission test is compliant with IEC 61967-2 standard which specifies the test board and the pin loading.

Table 31. EMI characteristics for f_{HSE} = 8 MHz and f_{HCLK} = 48 MHz

Symbol	Parameter	Conditions	Monitored frequency band	Value	Unit
S_{EMI}	Peak(1)	V_{DD} = 3.3 V, T_A = 25 °C, LQFP100 package compliant with IEC 61967-2	0.1 to 30 MHz	12	dBµV
			30 to 130 MHz	22	
			130 MHz to 1GHz	23	
	Level(2)		0.1 MHz to 1GHz	4	-

1. Refer to AN1709 “EMI radiated test” chapter.
2. Refer to AN1709 “EMI level classification” chapter.

Table 32. EMI characteristics for f_{HSE} = 8 MHz and f_{HCLK} = 72 MHz

Symbol	Parameter	Conditions	Monitored frequency band	Value	Unit
S_{EMI}	Peak(1)	V_{DD} = 3.3 V, T_A = 25 °C, LQFP100 package compliant with IEC 61967-2	0.1 to 30 MHz	12	dBµV
			30 to 130 MHz	19	
			130 MHz to 1GHz	29	
	Level(2)		0.1 MHz to 1GHz	4	-

1. Refer to AN1709 “EMI radiated test” chapter.
2. Refer to AN1709 “EMI level classification” chapter.

5.3.11 Absolute maximum ratings (electrical sensitivity)

Based on three different tests (ESD, LU) using specific measurement methods, the device is stressed in order to determine its performance in terms of electrical sensitivity.

Electrostatic discharge (ESD)

Electrostatic discharges (a positive then a negative pulse separated by 1 second) are applied to the pins of each sample according to each pin combination. The sample size depends on the number of supply pins in the device (3 parts × (n + 1) supply pins). This test conforms to the JESD22-A114/C101 standard.

Table 33. ESD absolute maximum ratings

Symbol	Ratings	Conditions	Class	Maximum value(1)	Unit
$V_{ESD(HBM)}$	Electrostatic discharge voltage (human body model)	T_A = +25 °C conforming to JESD22-A114	2	2000	V
$V_{ESD(CDM)}$	Electrostatic discharge voltage (charge device model)	T_A = +25 °C conforming to ANSI/ESD STM5.3.1	II	500	

1. Guaranteed based on test during characterization

Static latch-up

Two complementary static tests are required on six parts to assess the latch-up performance:

- A supply overvoltage is applied to each power supply pin
- A current injection is applied to each input, output and configurable I/O pin

These tests are compliant with EIA/JESD 78A IC latch-up standard.

Table 34. Electrical sensitivities

Symbol	Parameter	Conditions	Class
LU	Static latch-up class	T_A = +105 °C conforming to JESD78A	II level A

5.3.12 I/O current injection characteristics

As a general rule, current injection to the I/O pins, due to external voltage below V_{SS} or above V_{DD} (for standard, 3 V-capable I/O pins) should be avoided during normal product operation. However, in order to give an indication of the robustness of the microcontroller in cases when abnormal injection accidentally happens, susceptibility tests are performed on a sample basis during device characterization.

Functional susceptibilty to I/O current injection

While a simple application is executed on the device, the device is stressed by injecting current into the I/O pins programmed in floating input mode. While current is injected into the I/O pin, one at a time, the device is checked for functional failures.

The failure is indicated by an out of range parameter: ADC error above a certain limit (>5 LSB TUE), out of spec current injection on adjacent pins or other functional failure (for example reset, oscillator frequency deviation).

The test results are given in *Table 35*

Table 35. I/O current injection susceptibility

Symbol	Description	Functional susceptibility		Unit
		Negative injection	Positive injection	
I_{INJ}	Injected current on OSC_IN32, OSC_OUT32, PA4, PA5, PC13	-0	+0	mA
	Injected current on all FT pins	-5	+0	
	Injected current on any other pin	-5	+5	

5.3.13 I/O port characteristics

General input/output characteristics

Unless otherwise specified, the parameters given in *Table 36* are derived from tests performed under the conditions summarized in *Table 9*. All I/Os are CMOS and TTL compliant.

Table 36. I/O static characteristics

Symbol	Parameter	Conditions	Min	Typ	Max	Unit
V_{IL}	Low level input voltage	Standard IO input low level voltage	-	-	$0.28*(V_{DD}-2\ V)+0.8\ V$(1)	V
		IO FT(3) input low level voltage	-	-	$0.32*(V_{DD}-2V)+0.75\ V$(1)	
		All I/Os except BOOT0	-	-	$0.35\ V_{DD}$(2)	
V_{IH}	High level input voltage	Standard IO input high level voltage	$0.41*(V_{DD}-2\ V)+1.3\ V$(1)	-	-	
		IO FT(3) input high level voltage	$0.42*(V_{DD}-2\ V)+1\ V$(1)	-	-	
		All I/Os except BOOT0	$0.65\ V_{DD}$(2)	-	-	
V_{hys}	Standard IO Schmitt trigger voltage hysteresis(4)	-	200	-	-	mV
	IO FT Schmitt trigger voltage hysteresis(4)	-	5% V_{DD}(5)	-	-	
I_{lkg}	Input leakage current (6)	$V_{SS} \le V_{IN} \le V_{DD}$ Standard I/Os	-	-	±1	µA
		V_{IN} = 5 V I/O FT	-	-	3	
R_{PU}	Weak pull-up equivalent resistor(7)	$V_{IN} = V_{SS}$	30	40	50	kΩ
R_{PD}	Weak pull-down equivalent resistor(7)	$V_{IN} = V_{DD}$	30	40	50	
C_{IO}	I/O pin capacitance		-	5	-	pF

1. Data based on design simulation.
2. Tested in production.
3. FT = 5 V tolerant. To sustain a voltage higher than V_{DD} + 0.3 V the internal pull-up/pull-down resistors must be disabled.
4. Hysteresis voltage between Schmitt trigger switching levels. Evaluated by characterization, not tested in production, unless otherwise specified.
5. With a minimum of 100 mV.
6. Leakage can be higher than Max if negative current is injected on adjacent pins.

7. Pull-up and pull-down resistors are designed with a true resistance in series with a switchable PMOS/NMOS. This PMOS/NMOS contribution to the series resistance is minimum (~10%).

All I/Os are CMOS and TTL compliant (no software configuration required). Their characteristics cover more than the strict CMOS-technology or TTL parameters. The coverage of these requirements is shown in *Figure 26* and *Figure 27* for standard I/Os, and in *Figure 28* and *Figure 29* for 5 V tolerant I/Os.

Figure 26. Standard I/O input characteristics - CMOS port

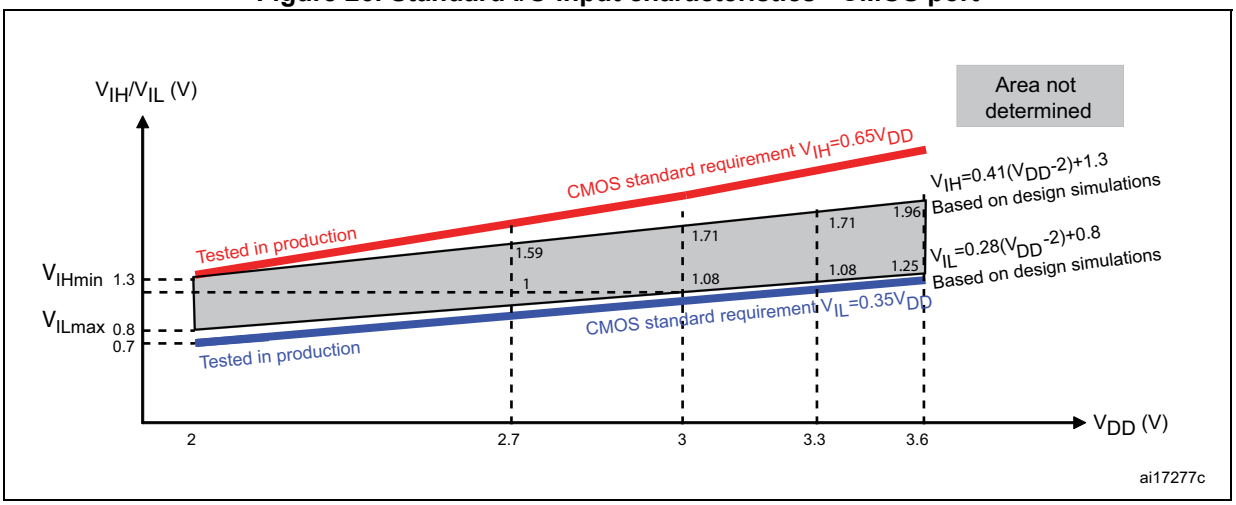

Figure 27. Standard I/O input characteristics - TTL port

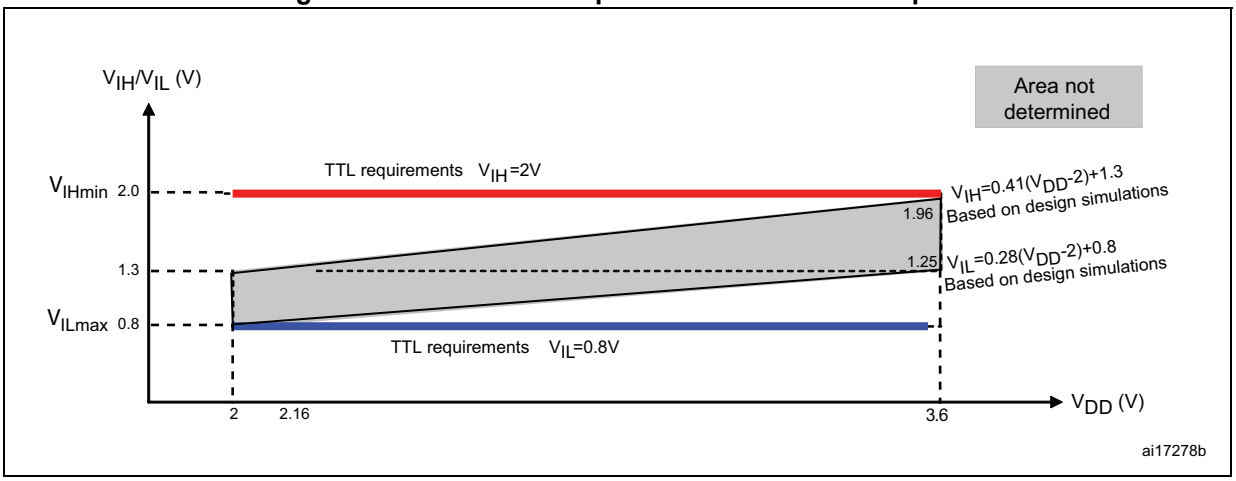

Figure 28. 5 V tolerant I/O input characteristics - CMOS port

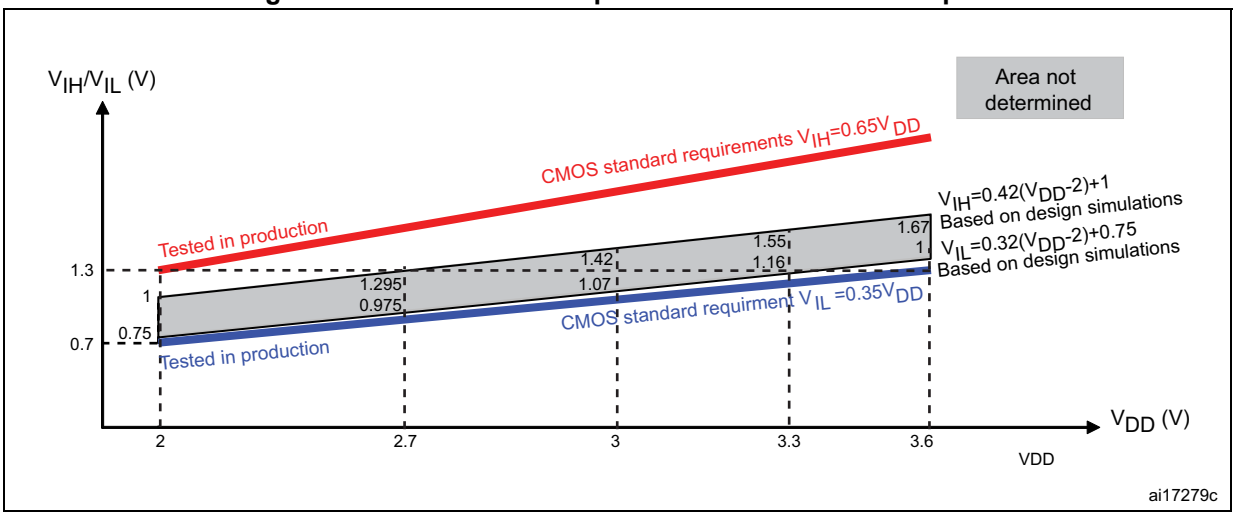

Figure 29. 5 V tolerant I/O input characteristics - TTL port

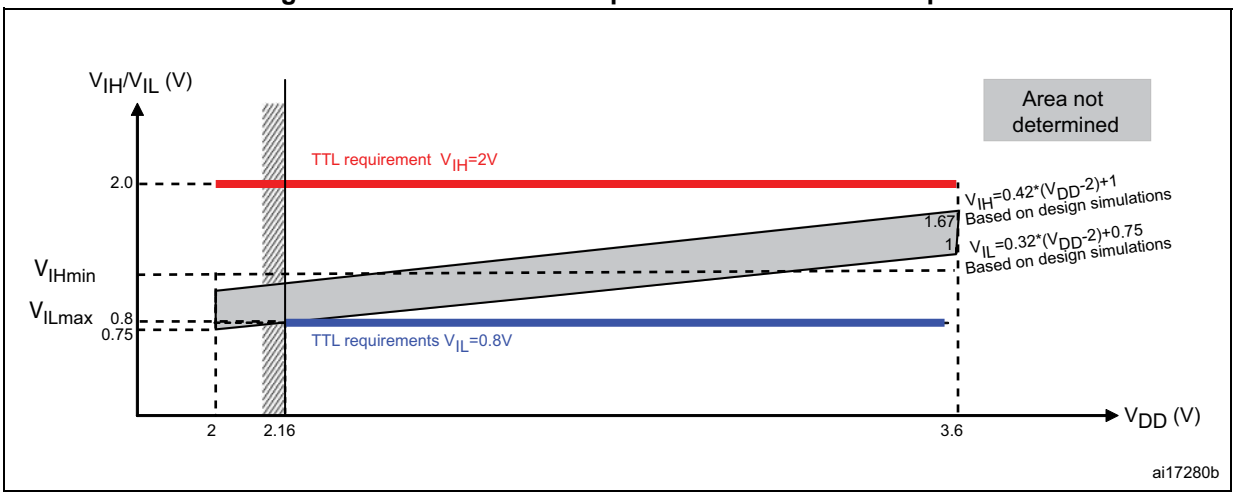

Output driving current

The GPIOs (general-purpose inputs/outputs) can sink or source up to ±8 mA, and sink or source up to ±20 mA (with a relaxed V_{OL}/V_{OH}) except PC13, PC14 and PC15, which can sink or source up to ±3 mA. When using the GPIOs PC13 to PC15 in output mode, the speed should not exceed 2 MHz with a maximum load of 30 pF.

In the user application, the number of I/O pins which can drive current must be limited to respect the absolute maximum rating specified in *Section 5.2*:

- The sum of the currents sourced by all the I/Os on $V_{DD,}$ plus the maximum Run consumption of the MCU sourced on $V_{DD,}$ cannot exceed the absolute maximum rating I_{VDD} (see *Table 7*).
- The sum of the currents sunk by all the I/Os on V_{SS} plus the maximum Run consumption of the MCU sunk on V_{SS} cannot exceed the absolute maximum rating I_{VSS} (see *Table 7*).

Output voltage levels

Unless otherwise specified, the parameters given in *Table 37* are derived from tests performed under ambient temperature and V_{DD} supply voltage conditions summarized in *Table 9*. All I/Os are CMOS and TTL compliant.

Table 37. Output voltage characteristics

Symbol	Parameter	Conditions	Min	Max	Unit
V_{OL}(1)	Output low level voltage for an I/O pin when 8 pins are sunk at same time	CMOS port(2), I_{IO} = +8 mA 2.7 V < V_{DD} < 3.6 V	-	0.4	V
V_{OH}(3)	Output high level voltage for an I/O pin when 8 pins are sourced at same time		V_{DD}–0.4	-	
V_{OL} (1)	Output low level voltage for an I/O pin when 8 pins are sunk at same time	TTL port(2) I_{IO} =+ 8mA 2.7 V < V_{DD} < 3.6 V	-	0.4	
V_{OH} (3)	Output high level voltage for an I/O pin when 8 pins are sourced at same time		2.4	-	
V_{OL}(1)(4)	Output low level voltage for an I/O pin when 8 pins are sunk at same time	I_{IO} = +20 mA 2.7 V < V_{DD} < 3.6 V	-	1.3	
V_{OH}(3)(4)	Output high level voltage for an I/O pin when 8 pins are sourced at same time		V_{DD}–1.3	-	
V_{OL}(1)(4)	Output low level voltage for an I/O pin when 8 pins are sunk at same time	I_{IO} = +6 mA 2 V < V_{DD} < 2.7 V	-	0.4	
V_{OH}(3)(4)	Output high level voltage for an I/O pin when 8 pins are sourced at same time		V_{DD}–0.4	-	

1. The I_{IO} current sunk by the device must always respect the absolute maximum rating specified in *Table 7* and the sum of I_{IO} (I/O ports and control pins) must not exceed I_{VSS}.
2. TTL and CMOS outputs are compatible with JEDEC standards JESD36 and JESD52.
3. The I_{IO} current sourced by the device must always respect the absolute maximum rating specified in *Table 7* and the sum of I_{IO} (I/O ports and control pins) must not exceed I_{VDD}.
4. Evaluated by characterization, not tested in production, unless otherwise specified.

Input/output AC characteristics

The definition and values of input/output AC characteristics are given in *Figure 30* and *Table 38*, respectively.

Unless otherwise specified, the parameters given in *Table 38* are derived from tests performed under the ambient temperature and V_{DD} supply voltage conditions summarized in *Table 9*.

Table 38. I/O AC characteristics(1)

MODEx[1:0] bit value(1)	Symbol	Parameter	Conditions	Min	Max	Unit
10	$f_{max(IO)out}$	Maximum frequency(2)	C_L = 50 pF, V_{DD} = 2 V to 3.6 V	-	2	MHz
	$t_{f(IO)out}$	Output high to low level fall time	C_L = 50 pF, V_{DD} = 2 V to 3.6 V	-	125(3)	ns
	$t_{r(IO)out}$	Output low to high level rise time		-	125(3)	
01	$f_{max(IO)out}$	Maximum frequency(2)	C_L = 50 pF, V_{DD} = 2 V to 3.6 V	-	10	MHz
	$t_{f(IO)out}$	Output high to low level fall time	C_L = 50 pF, V_{DD} = 2 V to 3.6 V	-	25(3)	ns
	$t_{r(IO)out}$	Output low to high level rise time		-	25(3)	
11	$F_{max(IO)out}$	Maximum frequency(2)	C_L = 30 pF, V_{DD} = 2.7 V to 3.6 V	-	50	MHz
			C_L = 50 pF, V_{DD} = 2.7 V to 3.6 V	-	30	
			C_L = 50 pF, V_{DD} = 2 V to 2.7 V	-	20	
	$t_{f(IO)out}$	Output high to low level fall time	C_L = 30 pF, V_{DD} = 2.7 V to 3.6 V	-	5(3)	ns
			C_L = 50 pF, V_{DD} = 2.7 V to 3.6 V	-	8(3)	
			C_L = 50 pF, V_{DD} = 2 V to 2.7 V	-	12(3)	
	$t_{r(IO)out}$	Output low to high level rise time	C_L = 30 pF, V_{DD} = 2.7 V to 3.6 V	-	5(3)	
			C_L = 50 pF, V_{DD} = 2.7 V to 3.6 V	-	8(3)	
			C_L = 50 pF, V_{DD} = 2 V to 2.7 V	-	12(3)	
-	t_{EXTIpw}	Pulse width of external signals detected by the EXTI controller	-	10	-	ns

1. The I/O speed is configured using the MODEx[1:0] bits. Refer to the STM32F10xxx reference manual for a description of GPIO port configuration register.
2. The maximum frequency is defined in *Figure 30*.
3. Specified by design, not tested in production.

Figure 30. I/O AC characteristics definition

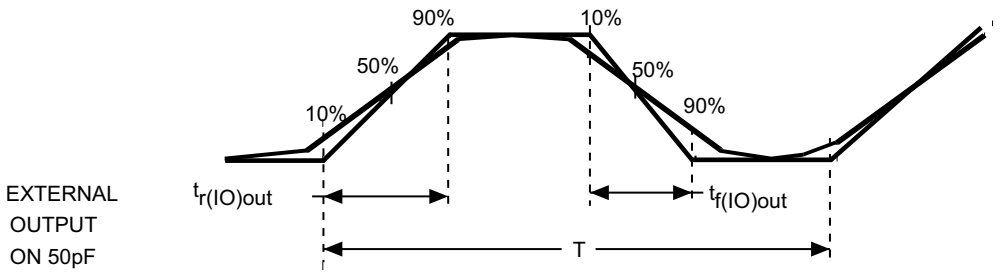

5.3.14 NRST pin characteristics

The NRST pin input driver uses CMOS technology. It is connected to a permanent pull-up resistor, R_{PU} (see *Table 36*).

Unless otherwise specified, the parameters given in *Table 39* are derived from tests performed under the ambient temperature and V_{DD} supply voltage conditions summarized in *Table 9*.

Table 39. NRST pin characteristics

Symbol	Parameter	Conditions	Min	Typ	Max	Unit
$V_{IL(NRST)}$(1)	NRST Input low level voltage	-	–0.5	-	0.8	V
$V_{IH(NRST)}$(1)	NRST Input high level voltage	-	2	-	V_{DD}+0.5	
$V_{hys(NRST)}$	NRST Schmitt trigger voltage hysteresis	-	-	200	-	mV
R_{PU}	Weak pull-up equivalent resistor(2)	$V_{IN} = V_{SS}$	30	40	50	kΩ
$V_{F(NRST)}$(1)	NRST Input filtered pulse	-	-	-	100	ns
$V_{NF(NRST)}$(1)	NRST Input not filtered pulse	-	300	-	-	ns

1. Specified by design, not tested in production.
2. The pull-up is designed with a true resistance in series with a switchable PMOS. This PMOS contribution to the series resistance must be minimum (~10%).

Figure 31. Recommended NRST pin protection

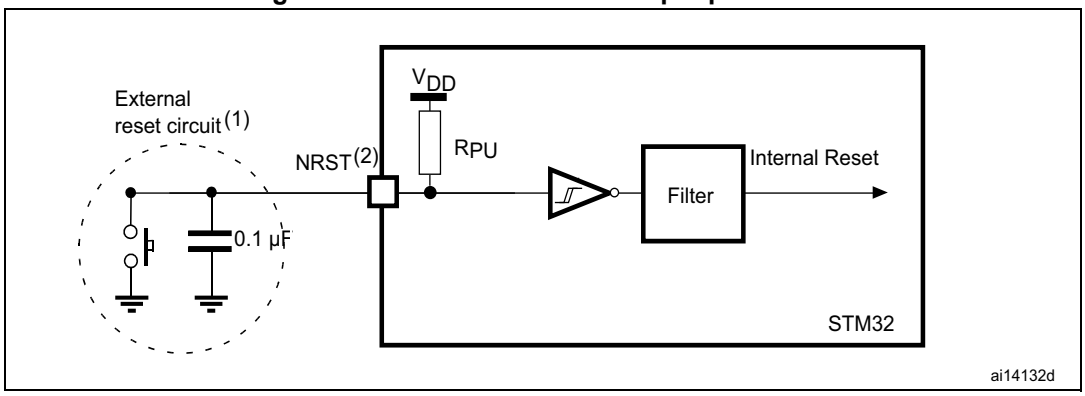

2. The reset network protects the device against parasitic resets.
3. The user must ensure that the level on the NRST pin can go below the $V_{IL(NRST)}$ max level specified in *Table 39*, otherwise the reset is not taken into account by the device.

5.3.15 TIM timer characteristics

The parameters given in *Table 40* are specified by design, not tested in production.

Refer to *Section 5.3.12* for details on the input/output alternate function characteristics (output compare, input capture, external clock, PWM output).

Table 40. TIMx(1) characteristics

Symbol	Parameter	Conditions	Min	Max	Unit
$t_{res(TIM)}$	Timer resolution time	-	1	-	$t_{TIMxCLK}$
		$f_{TIMxCLK}$ = 72 MHz	13.9	-	ns
f_{EXT}	Timer external clock frequency on CH1 to CH4	-	0	$f_{TIMxCLK}/2$	MHz
		$f_{TIMxCLK}$ = 72 MHz	0	36	MHz
Res_{TIM}	Timer resolution	-	-	16	bit
$t_{COUNTER}$	16-bit counter clock period when internal clock is selected	-	1	65536	$t_{TIMxCLK}$
		$f_{TIMxCLK}$ = 72 MHz	0.0139	910	µs
t_{MAX_COUNT}	Maximum possible count	-	-	65536 × 65536	$t_{TIMxCLK}$
		$f_{TIMxCLK}$ = 72 MHz	-	59.6	s

1. TIMx is used as a general term to refer to the TIM1, TIM2, TIM3 and TIM4 timers.

5.3.16 Communications interfaces

I²C interface characteristics

The STM32F103xx performance line I²C interface meets the requirements of the standard I²C communication protocol with the following restrictions: the I/O pins SDA and SCL are mapped to are not “true” open-drain. When configured as open-drain, the PMOS connected between the I/O pin and V_{DD} is disabled, but is still present.

The I²C characteristics are described in *Table 41*. Refer also to *Section 5.3.12* for more details on the input/output alternate function characteristics (SDA and SCL).

Table 41. I²C characteristics

Symbol	Parameter	Standard mode I²C(1)(2)		Fast mode I²C(1)(2)		Unit
		Min	Max	Min	Max	
$t_{w(SCLL)}$	SCL clock low time	4.7	-	1.3	-	µs
$t_{w(SCLH)}$	SCL clock high time	4.0	-	0.6		
$t_{su(SDA)}$	SDA setup time	250	-	100	-	ns
$t_{h(SDA)}$	SDA data hold time	-	3450(3)	-	900(3)	
$t_{r(SDA)}$ $t_{r(SCL)}$	SDA and SCL rise time	-	1000	-	300	
$t_{f(SDA)}$ $t_{f(SCL)}$	SDA and SCL fall time	-	300	-	300	
$t_{h(STA)}$	Start condition hold time	4.0	-	0.6	-	µs
$t_{su(STA)}$	Repeated Start condition setup time	4.7	-	0.6	-	
$t_{su(STO)}$	Stop condition setup time	4.0	-	0.6	-	µs
$t_{w(STO:STA)}$	Stop to Start condition time (bus free)	4.7	-	1.3	-	µs
C_b	Capacitive load for each bus line	-	400	-	400	pF
t_{SP}	Pulse width of spikes suppressed by the analog filter	0	50(4)	0	50(4)	ns

1. Specified by design, not tested in production.
2. f_{PCLK1} must be at least 2 MHz to achieve standard mode I²C frequencies. It must be at least 4 MHz to achieve fast mode I²C frequencies. It must be a multiple of 10 MHz to reach the 400 kHz maximum I2C fast mode clock.
3. The maximum Data hold time must be met if the interface does not stretch the low period of SCL signal.
4. The minimum width of the spikes filtered by the analog filter is above t_{SP}(max).

Figure 32. I²C bus AC waveforms and measurement circuit

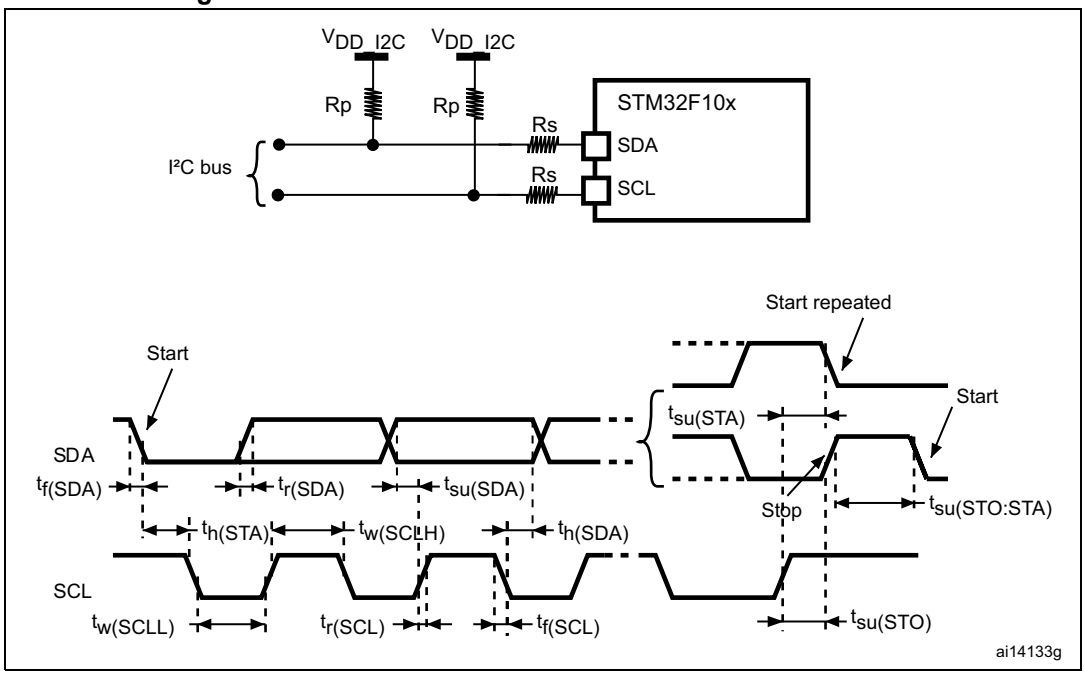

1. Measurement points are done at CMOS levels: 0.3 V_{DD} and 0.7 V_{DD}.
2. Rs = Series protection resistors, Rp = Pull-up resistors, V_{DD_I2C} = I2C bus supply.

Table 42. SCL frequency (f_{PCLK1} = 36 MHz, V_{DD_I2C} = 3.3 V)(1)(2)

f_{SCL} (kHz)	I2C_CCR value
	R_P = 4.7 kΩ
400	0x801E
300	0x8028
200	0x803C
100	0x00B4
50	0x0168
20	0x0384

1. R_P = External pull-up resistance, f_{SCL} = I²C speed,
2. For speeds around 200 kHz, the tolerance on the achieved speed is ±5%. For other speed ranges, the tolerance on the achieved speed is ±2%. These variations depend upon the accuracy of the external components used to design the application.

SPI interface characteristics

Unless otherwise specified, the parameters given in *Table 43* are derived from tests performed under the ambient temperature, f_{PCLKx} frequency and V_{DD} supply voltage conditions summarized in *Table 9*.

Refer to *Section 5.3.12* for more details on the input/output alternate function characteristics (NSS, SCK, MOSI, MISO).

Table 43. SPI characteristics

Symbol	Parameter	Conditions	Min	Max	Unit
f_{SCK} $1/t_{c(SCK)}$	SPI clock frequency	Master mode	-	18	MHz
		Slave mode	-	18	
$t_{r(SCK)}$ $t_{f(SCK)}$	SPI clock rise and fall time	Capacitive load: C = 30 pF	-	8	ns
DuCy(SCK)	SPI slave input clock duty cycle	Slave mode	30	70	%
$t_{su(NSS)}$(1)	NSS setup time	Slave mode	4 t_{PCLK}	-	ns
$t_{h(NSS)}$(1)	NSS hold time	Slave mode	2 t_{PCLK}	-	
$t_{w(SCKH)}$(1) $t_{w(SCKL)}$(1)	SCK high and low time	Master mode, f_{PCLK} = 36 MHz, presc = 4	50	60	
$t_{su(MI)}$(1) $t_{su(SI)}$(1)	Data input setup time	Master mode	5	-	
		Slave mode	5	-	
$t_{h(MI)}$(1)	Data input hold time	Master mode	5	-	
$t_{h(SI)}$(1)		Slave mode	4	-	
$t_{a(SO)}$(1)(2)	Data output access time	Slave mode, f_{PCLK} = 20 MHz	0	3 t_{PCLK}	
$t_{dis(SO)}$(1)(3)	Data output disable time	Slave mode	2	10	
$t_{v(SO)}$(1)	Data output valid time	Slave mode (after enable edge)	-	25	
$t_{v(MO)}$(1)	Data output valid time	Master mode (after enable edge)	-	5	
$t_{h(SO)}$(1)	Data output hold time	Slave mode (after enable edge)	15	-	
$t_{h(MO)}$(1)		Master mode (after enable edge)	2	-	

1. Evaluated by characterization, not tested in production, unless otherwise specified.
2. Min time is for the minimum time to drive the output and the max time is for the maximum time to validate the data.
3. Min time is for the minimum time to invalidate the output and the max time is for the maximum time to put the data in Hi-Z.

Figure 33. SPI timing diagram - slave mode and CPHA = 0

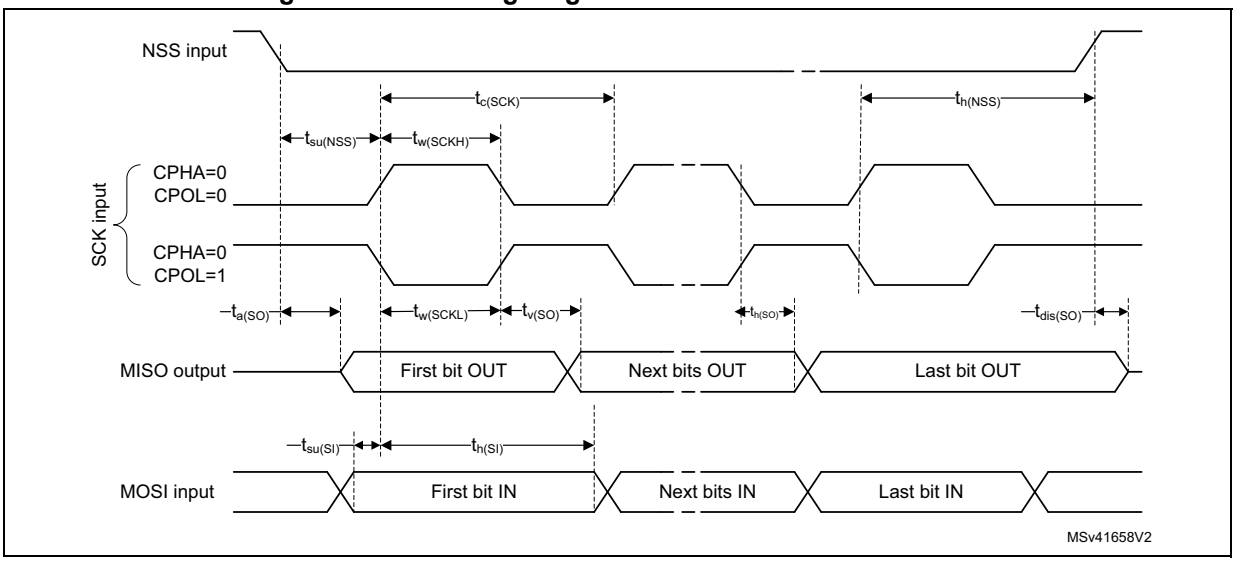

Figure 34. SPI timing diagram - slave mode and CPHA = 1

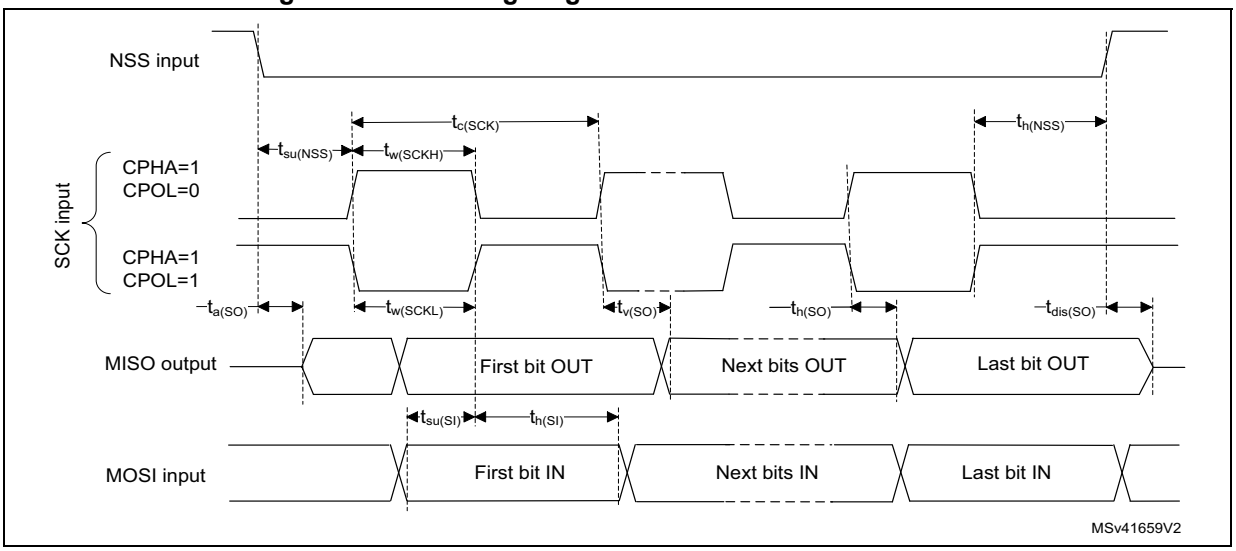

Figure 35. SPI timing diagram - master mode

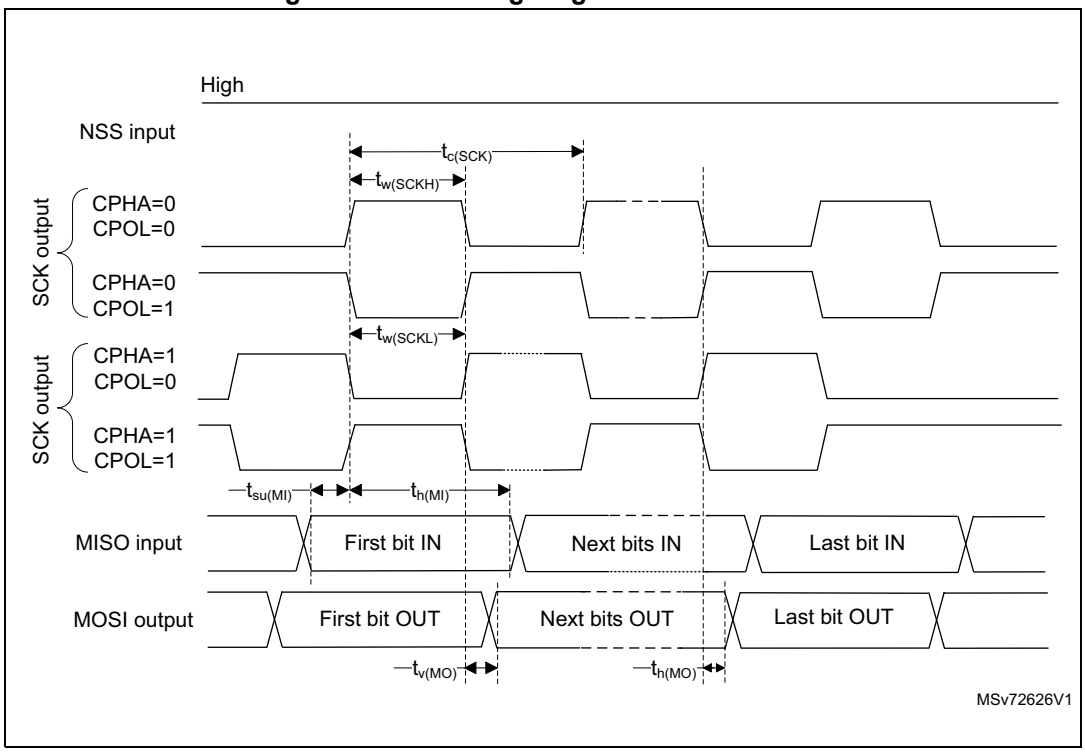

USB characteristics

The USB interface is USB-IF certified (Full Speed).

Table 44. USB startup time

Symbol	Parameter	Max	Unit
$t_{STARTUP}$(1)	USB transceiver startup time	1	µs

1. Guaranteed by design.

Table 45. USB DC electrical characteristics

Symbol	Parameter	Conditions	Min.(1)	Max.(1)	Unit
Input levels					
V_{DD}	USB operating voltage(2)		3.0(3)	3.6	V
V_{DI}(4)	Differential input sensitivity	I(USBDP, USBDM)	0.2	-	V
V_{CM}(4)	Differential common mode range	Includes V_{DI} range	0.8	2.5	
V_{SE}(4)	Single ended receiver threshold		1.3	2.0	
Output levels					
V_{OL}	Static output level low	R_L of 1.5 kΩ to 3.6 V(5)	-	0.3	V
V_{OH}	Static output level high	R_L of 15 kΩ to V_{SS}(5)	2.8	3.6	

1. All the voltages are measured from the local ground potential.
2. To be compliant with the USB 2.0 full-speed electrical specification, the USBDP (D+) pin must be pulled up with a 1.5 kΩ resistor to a 3.0 to 3.6 V voltage range.
3. The STM32F103xx USB functionality is ensured down to 2.7 V, but not the full USB electrical characteristics, which are degraded in the 2.7 to 3.0 V V_{DD} voltage range.
4. Specified by design, not tested in production.
5. R_L is the load connected on the USB drivers.

Figure 36. USB timings: definition of data signal rise and fall time

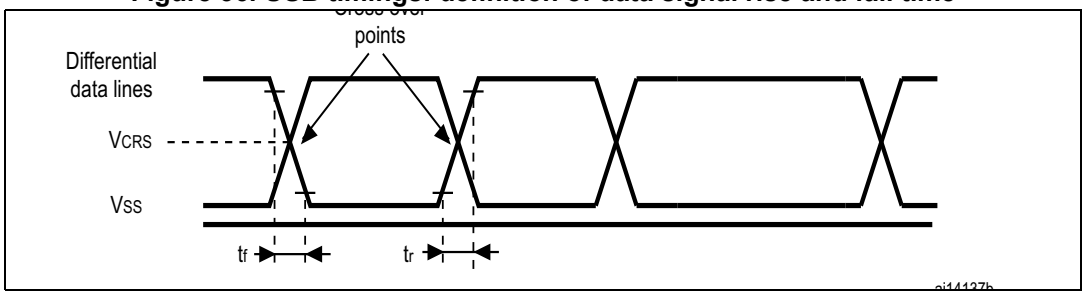

Table 46. USB: Full-speed electrical characteristics(1)

Symbol	Parameter	Conditions	Min	Max	Unit
Driver characteristics					
t_r	Rise time(2)	C_L = 50 pF	4	20	ns
t_f	Fall time(2)	C_L = 50 pF	4	20	ns
t_{rfm}	Rise/ fall time matching	t_r/t_f	90	110	%
V_{CRS}	Output signal crossover voltage	-	1.3	2.0	V

1. Specified by design, not tested in production.
2. Measured from 10% to 90% of the data signal. For more detailed informations, refer to USB specification - Section 7 (version 2.0).

5.3.17 CAN (controller area network) interface

Refer to *Section 5.3.12* for more details on the input/output alternate function characteristics (CAN_TX and CAN_RX).

5.3.18 12-bit ADC characteristics

Unless otherwise specified, the parameters given in *Table 47* are derived from tests performed under the ambient temperature, f_{PCLK2} frequency and V_{DDA} supply voltage conditions summarized in *Table 9*.

Note: It is recommended to perform a calibration after each power-up.

Table 47. ADC characteristics

Symbol	Parameter	Conditions	Min	Typ	Max	Unit
V_{DDA}	Power supply	-	2.4	-	3.6	V
V_{REF+}	Positive reference voltage	-	2.4	-	V_{DDA}	V
I_{VREF}	Current on the V_{REF} input pin	-	-	160(1)	220(1)	µA
f_{ADC}	ADC clock frequency	-	0.6	-	14	MHz
f_S(2)	Sampling rate	-	0.05	-	1	MHz
f_{TRIG}(2)	External trigger frequency	f_{ADC} = 14 MHz	-	-	823	kHz
			-	-	17	1 / f_{ADC}
V_{AIN}(3)	Conversion voltage range		0 (V_{SSA} or V_{REF-} tied to ground)	-	V_{REF+}	V
R_{AIN}(2)	External input impedance	See *Equation 1* and *Table 48* for details	-	-	50	kΩ
R_{ADC}(2)	Sampling switch resistance	-	-	-	1	kΩ
C_{ADC}(2)	Internal sample and hold capacitor	-	-	-	8	pF
t_{CAL}(2)	Calibration time	f_{ADC} = 14 MHz	5.9			µs
		-	83			1 / f_{ADC}
t_{lat}(2)	Injection trigger conversion latency	f_{ADC} = 14 MHz	-	-	0.214	µs
		-	-	-	3(4)	1 / f_{ADC}
t_{latr}(2)	Regular trigger conversion latency	f_{ADC} = 14 MHz	-	-	0.143	µs
		-	-	-	2(4)	1 / f_{ADC}
t_S(2)	Sampling time	f_{ADC} = 14 MHz	0.107	-	17.1	µs
		-	1.5	-	239.5	1 / f_{ADC}
t_{STAB}(2)	Power-up time	-	0	0	1	µs
t_{CONV}(2)	Total conversion time (including sampling time)	f_{ADC} = 14 MHz	1	-	18	µs
		-	14 to 252 (t_S for sampling +12.5 for successive approximation)			1 / f_{ADC}

1. Evaluated by characterization, not tested in production, unless otherwise specified.
2. Specified by design, not tested in production.
3. In devices delivered in VFQFPN and LQFP packages, V_{REF+} is internally connected to V_{DDA} and V_{REF-} is internally connected to V_{SSA}. Devices that come in the TFBGA64 package have a V_{REF+} pin but no V_{REF-} pin (V_{REF-} is internally connected to V_{SSA}), see *Table 5* and *Figure 7*.
4. For external triggers, a delay of $1/f_{PCLK2}$ must be added to the latency specified in *Table 47*.

Equation 1: R_{AIN} max formula:

$$R_{AIN} < \frac{T_S}{f_{ADC} \times C_{ADC} \times \ln(2^{N+2})} - R_{ADC}$$

The formula above (*Equation 1*) is used to determine the maximum external impedance allowed for an error below 1/4 of LSB. Here N = 12 (from 12-bit resolution).

Table 48. R_{AIN} max for f_{ADC} = 14 MHz(1)

T_s (cycles)	t_S (µs)	R_{AIN} max (kΩ)
1.5	0.11	0.4
7.5	0.54	5.9
13.5	0.96	11.4
28.5	2.04	25.2
41.5	2.96	37.2
55.5	3.96	50
71.5	5.11	NA
239.5	17.1	NA

1. Evaluated by characterization, not tested in production, unless otherwise specified.

Table 49. ADC accuracy - Limited test conditions(1) (2)

Symbol	Parameter	Test conditions	Typ	Max(3)	Unit
ET	Total unadjusted error	f_{PCLK2} = 56 MHz, f_{ADC} = 14 MHz, R_{AIN} < 10 kΩ, V_{DDA} = 3 V to 3.6 V, T_A = 25 °C Measurements made after ADC calibration	±1.3	±2	LSB
EO	Offset error		±1.0	±1.5	
EG	Gain error		±0.5	±1.5	
ED	Differential linearity error		±0.7	±1.0	
EL	Integral linearity error		±0.8	±1.5	

1. ADC DC accuracy values are measured after internal calibration.
2. Injecting a negative current on any analog input pins should be avoided as this significantly reduces the accuracy of the conversion being performed on another analog input. It is recommended to add a Schottky diode (pin to ground) to analog pins that may potentially inject negative currents.
Any positive injection current within the limits specified for $I_{INJ(PIN)}$ and $\Sigma I_{INJ(PIN)}$ in *Section 5.3.12* does not affect the ADC accuracy.
3. Evaluated by characterization, not tested in production, unless otherwise specified.

Table 50. ADC accuracy(1) (2) (3)

Symbol	Parameter	Test conditions	Typ	Max(4)	Unit
ET	Total unadjusted error	f_{PCLK2} = 56 MHz, f_{ADC} = 14 MHz, R_{AIN} < 10 kΩ, V_{DDA} = 2.4 V to 3.6 V Measurements made after ADC calibration	±2	±5	LSB
EO	Offset error		±1.5	±2.5	
EG	Gain error		±1.5	±3	
ED	Differential linearity error		±1	±2	
EL	Integral linearity error		±1.5	±3	

1. ADC DC accuracy values are measured after internal calibration.
2. Better performance can be achieved in restricted V_{DD}, frequency and temperature ranges.
3. Injecting a negative current on any analog input pins should be avoided as this significantly reduces the accuracy of the conversion being performed on another analog input. It is recommended to add a Schottky diode (pin to ground) to standard analog pins which may potentially inject negative current. Any positive injection current within the limits specified for $I_{INJ(PIN)}$ and $\Sigma I_{INJ(PIN)}$ in *Section 5.3.12* does not affect the ADC accuracy.
4. Evaluated by characterization, not tested in production, unless otherwise specified.

Figure 37. ADC accuracy characteristics

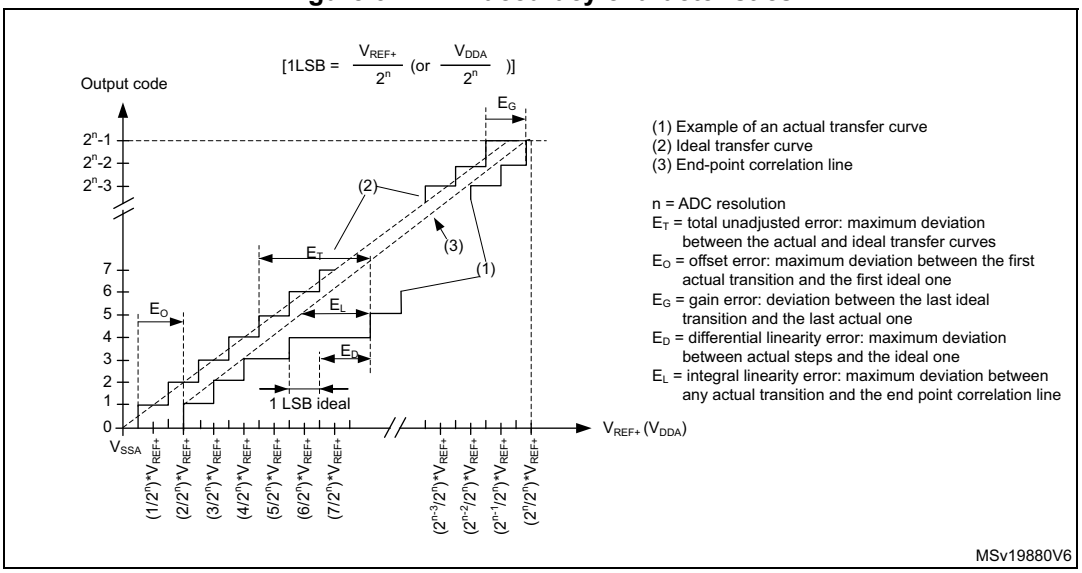

Figure 38. Typical connection diagram using the ADC

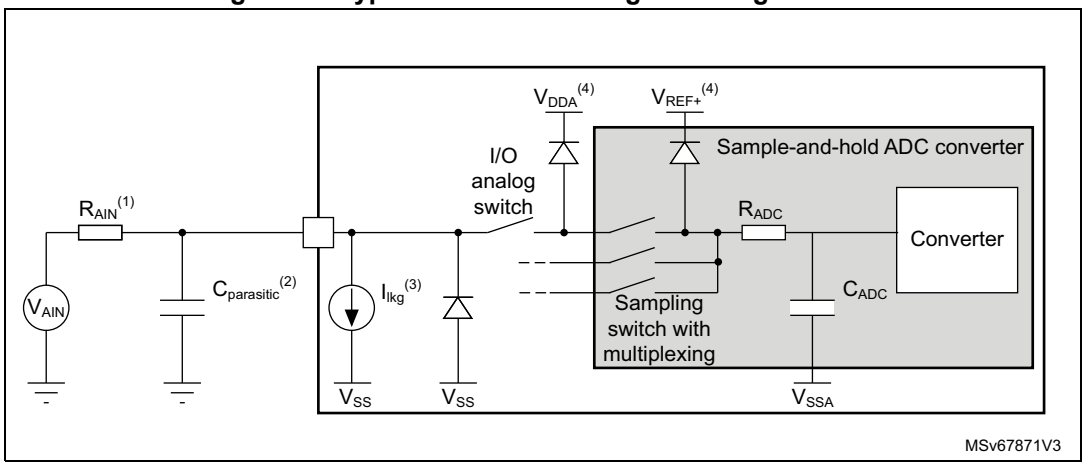

1. Refer to *Table 47* for the values of R_{AIN}, R_{ADC} and C_{ADC}.
2. $C_{parasitic}$ represents the capacitance of the PCB (dependent on soldering and PCB layout quality) plus the pad capacitance (refer to *Table 36* for the value of the pad capacitance). A high $C_{parasitic}$ value will downgrade conversion accuracy. To remedy this, f_{ADC} should be reduced.
3. Refer to *Table 36* for the values of I_{lkg}.
4. Refer to *Figure 14*.

General PCB design guidelines

Power supply decoupling must be performed as shown in *Figure 39* or *Figure 40*, depending on whether V_{REF+} is connected to V_{DDA} or not. The 10 nF capacitors should be ceramic (good quality), and placed as close as possible to the chip.

Figure 39. Power supply and reference decoupling (V_{REF+} not connected to V_{DDA})

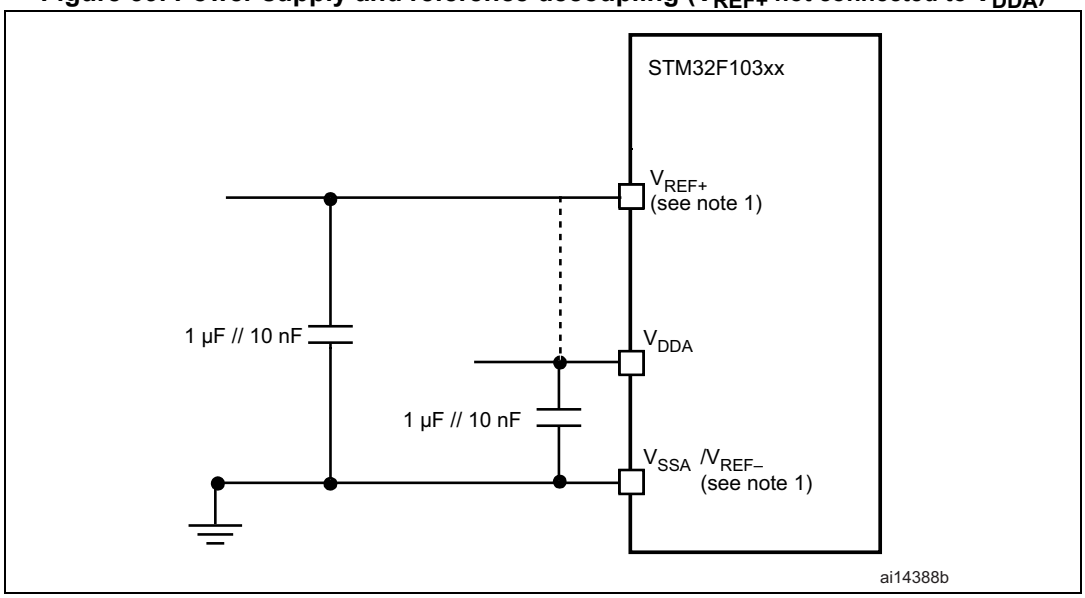

1. V_{REF+} and V_{REF-} inputs are available only on 100-pin packages.

Figure 40. Power supply and reference decoupling (V_{REF+} connected to V_{DDA})

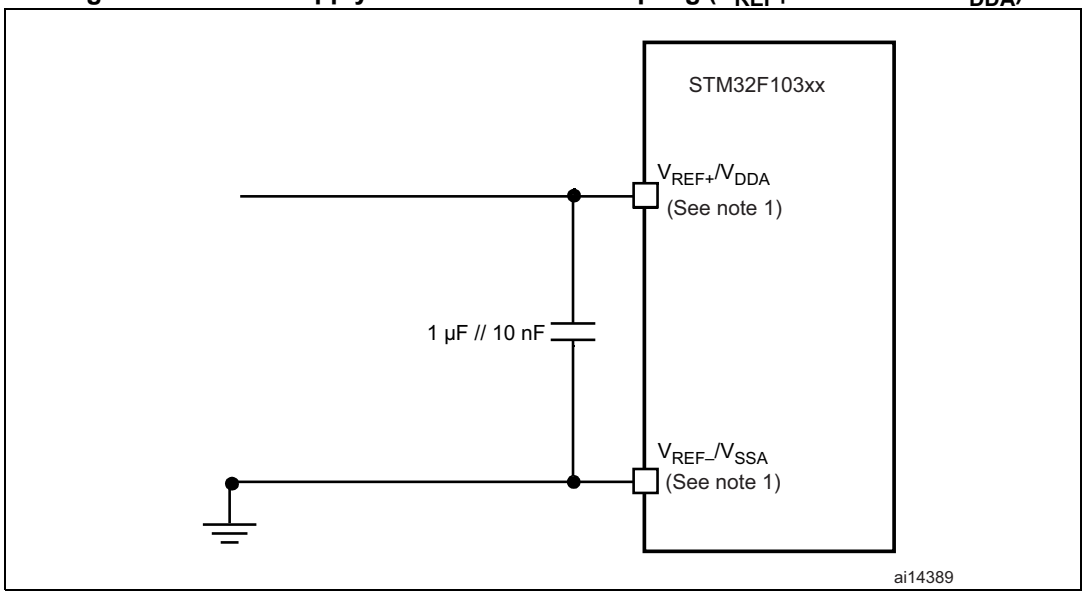

1. V_{REF+} and V_{REF-} inputs are available only on 100-pin packages.

5.3.19 Temperature sensor characteristics

Table 51. TS characteristics

Symbol	Parameter	Min	Typ	Max	Unit
T_L(1)	V_{SENSE} linearity with temperature	-	±1	±2	°C
Avg_Slope(1)	Average slope	4.0	4.3	4.6	mV/°C
V_{25}(1)	Voltage at 25 °C	1.34	1.43	1.52	V
t_{START}(2)	Startup time	4	-	10	µs
T_{S_temp}(3)(2)	ADC sampling time when reading the temperature	-	-	17.1	

1. Evaluated by characterization, not tested in production, unless otherwise specified.
2. Specified by design, not tested in production.
3. Shortest sampling time can be determined in the application by multiple iterations.

6 Package information

In order to meet environmental requirements, ST offers these devices in different grades of ECOPACK® packages, depending on their level of environmental compliance. ECOPACK® specifications, grade definitions and product status are available at: *www.st.com*. ECOPACK® is an ST trademark.

6.1 Device marking

Refer to technical note “Reference device marking schematics for STM32 microcontrollers and microprocessors” (TN1433), available on www.st.com, for the location of pin 1/ ball A1, as well as the location and orientation of the marking areas versus pin 1/ball A1.

Parts marked as “ES”, “E”, or accompanied by an engineering sample notification letter, are not yet qualified and therefore not approved for use in production. ST is not responsible for any consequences resulting from such use. In no event will ST be liable for the customer using any of these engineering samples in production. ST’s Quality department must be contacted prior to any decision to use these engineering samples to run a qualification activity.

6.2 VFQFPN36 package information (ZR)

Figure 41. VFQFPN - 36 pin, 6x6 mm, 0.5 mm pitch very thin profile fine pitch quad flat package outline

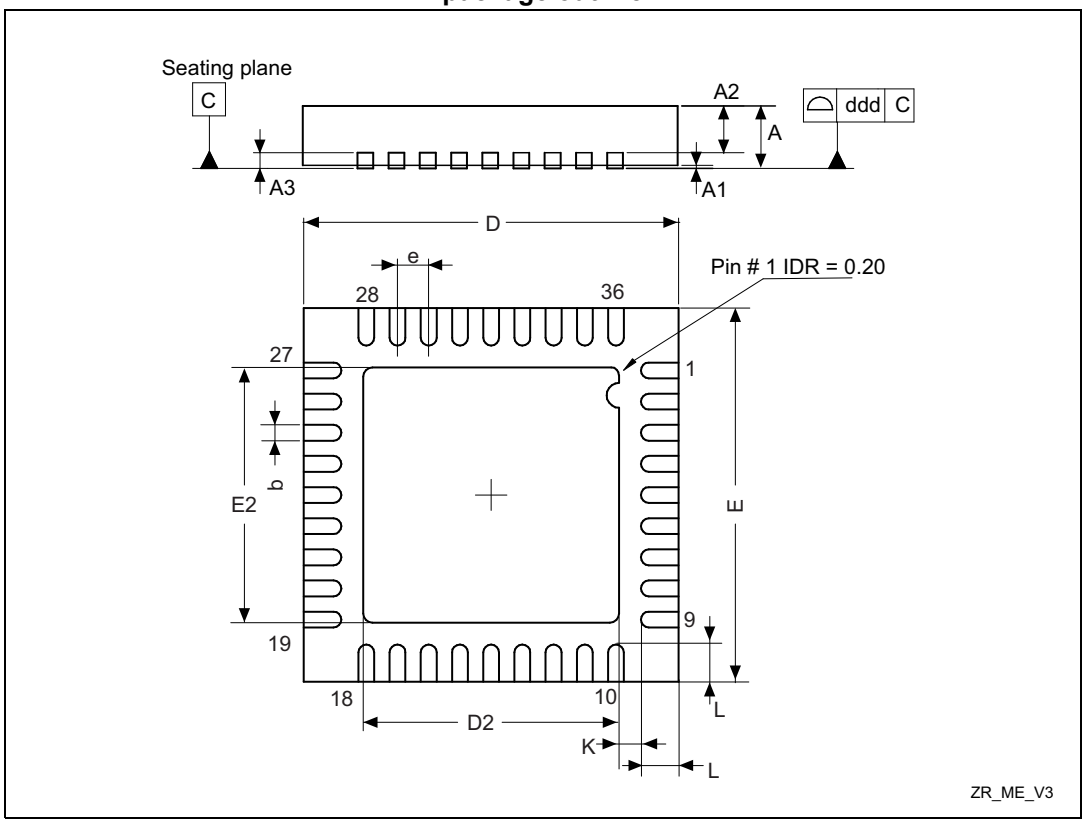

1. Drawing is not to scale.

Table 52. VFQFPN - 36 pin, 6x6 mm, 0.5 mm pitch very thin profile fine pitch quad flat package mechanical data

Symbol	millimeters			inches[1]		
	Min	Typ	Max	Min	Typ	Max
A	0.800	0.900	1.000	0.0315	0.0354	0.0394
A1	-	0.020	0.050	-	0.0008	0.0020
A2	-	0.650	1.000	-	0.0256	0.0394
A3	-	0.200	-	-	0.0079	-
b	0.180	0.230	0.300	0.0071	0.0091	0.0118
D	5.875	6.000	6.125	0.2313	0.2362	0.2411
D2	1.750	3.700	4.250	0.0689	0.1457	0.1673
E	5.875	6.000	6.125	0.2313	0.2362	0.2411
E2	1.750	3.700	4.250	0.0689	0.1457	0.1673
e	0.450	0.500	0.550	0.0177	0.0197	0.0217
L	0.350	0.550	0.750	0.0138	0.0217	0.0295
K	0.250	-	-	0.0098	-	-
ddd	-	-	0.080	-	-	0.0031

1. Values in inches are converted from mm and rounded to 4 decimal digits.

Figure 42. VFQFPN - 36 pin, 6x6 mm, 0.5 mm pitch very thin profile fine pitch quad flat package recommended footprint

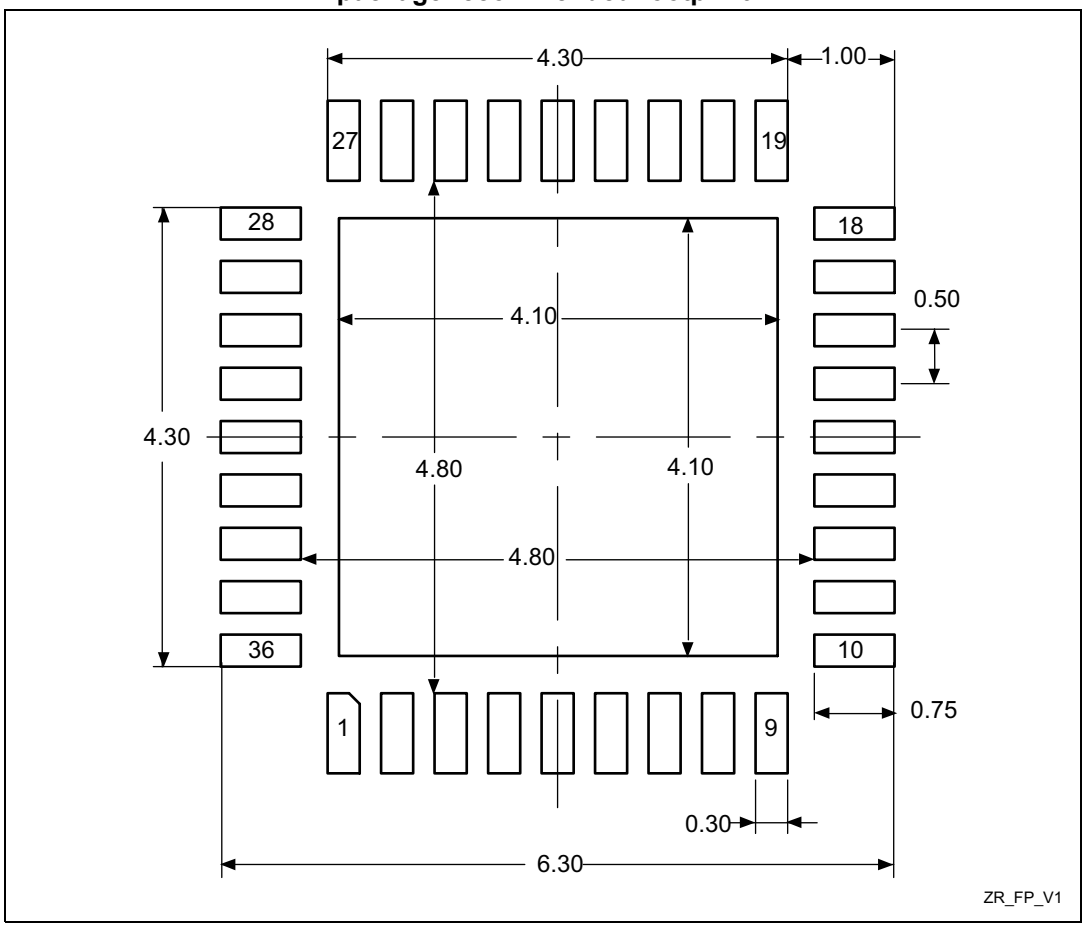

1. Dimensions are expressed in millimeters.

6.3 UFQFPN48 package information (A0B9)

This UFQFPN is a 48-lead, 7 x 7 mm, 0.5 mm pitch, ultra thin fine pitch quad flat package.

Figure 43. UFQFPN48 – Outline

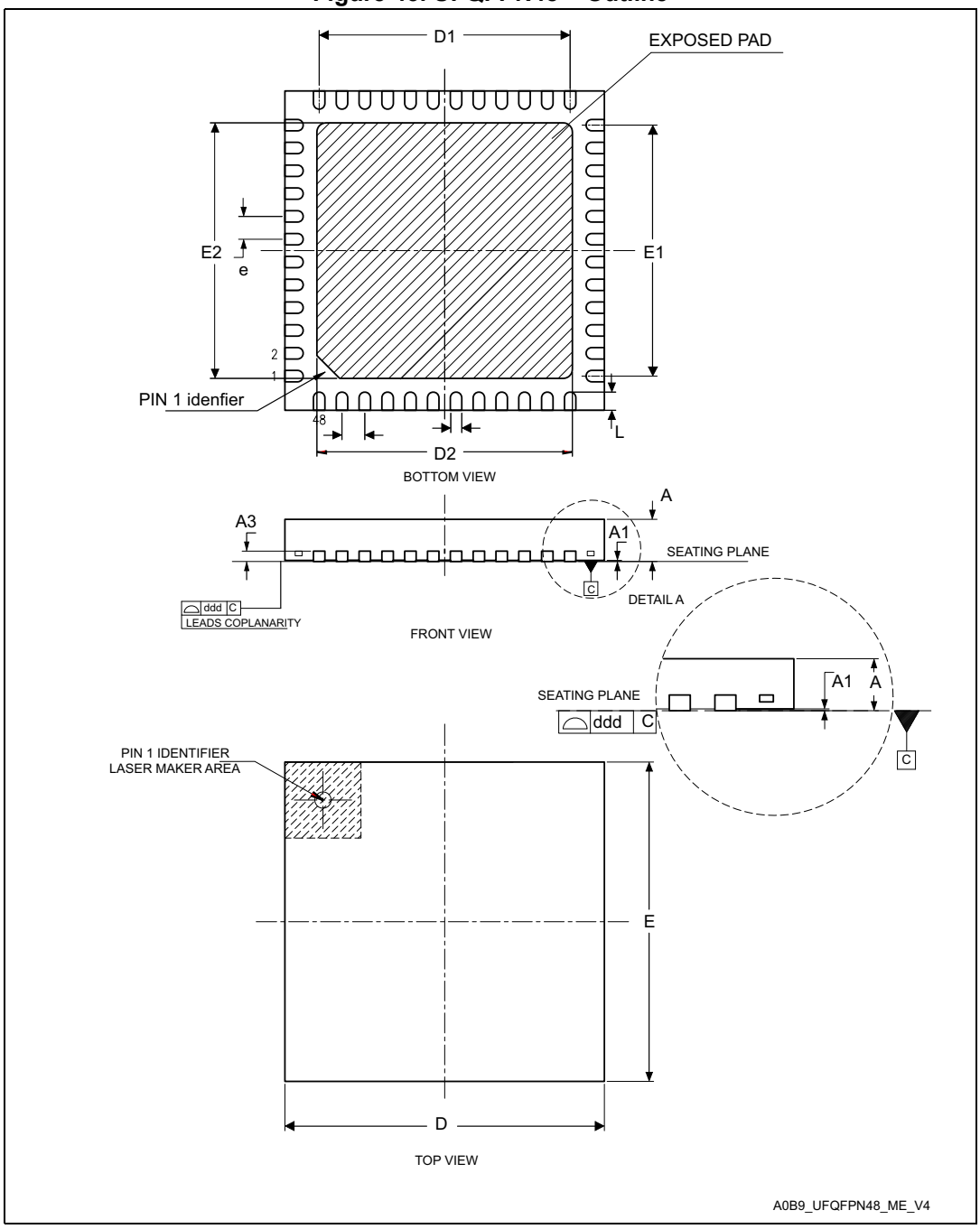

1. Drawing is not to scale.
2. All leads/pads should also be soldered to the PCB to improve the lead/pad solder joint life.
3. There is an exposed die pad on the underside of the UFQFPN48 package. It is recommended to connect and solder this back-side pad to PCB ground.

Table 53. UFQFPN48 – Mechanical data

Symbol	millimeters			inches[1]		
	Min	Typ	Max	Min	Typ	Max
A	0.500	0.550	0.600	0.0197	0.0217	0.0236
A1	0.000	0.020	0.050	0.0000	0.0008	0.0020
A3	-	0.152	-	-	0.0060	-
b	0.200	0.250	0.300	0.0079	0.0098	0.0118
D[2]	6.900	7.000	7.100	0.2717	0.2756	0.2795
D1	5.400	5.500	5.600	0.2126	0.2165	0.2205
D2[3]	5.500	5.600	5.700	0.2165	0.2205	0.2244
E[2]	6.900	7.000	7.100	0.2717	0.2756	0.2795
E1	5.400	5.500	5.600	0.2126	0.2165	0.2205
E2[3]	5.500	5.600	5.700	0.2165	0.2205	0.2244
e	-	0.500	-	-	0.0197	-
L	0.300	0.400	0.500	0.0118	0.0157	0.0197
ddd	-	-	0.080	-	-	0.0031

1. Values in inches are converted from mm and rounded to four decimal digits.
2. Dimensions D and E do not include mold protrusion, not exceed 0.15 mm.
3. Dimensions D2 and E2 are not in accordance with JEDEC.

Figure 44. UFQFPN48 – Footprint example

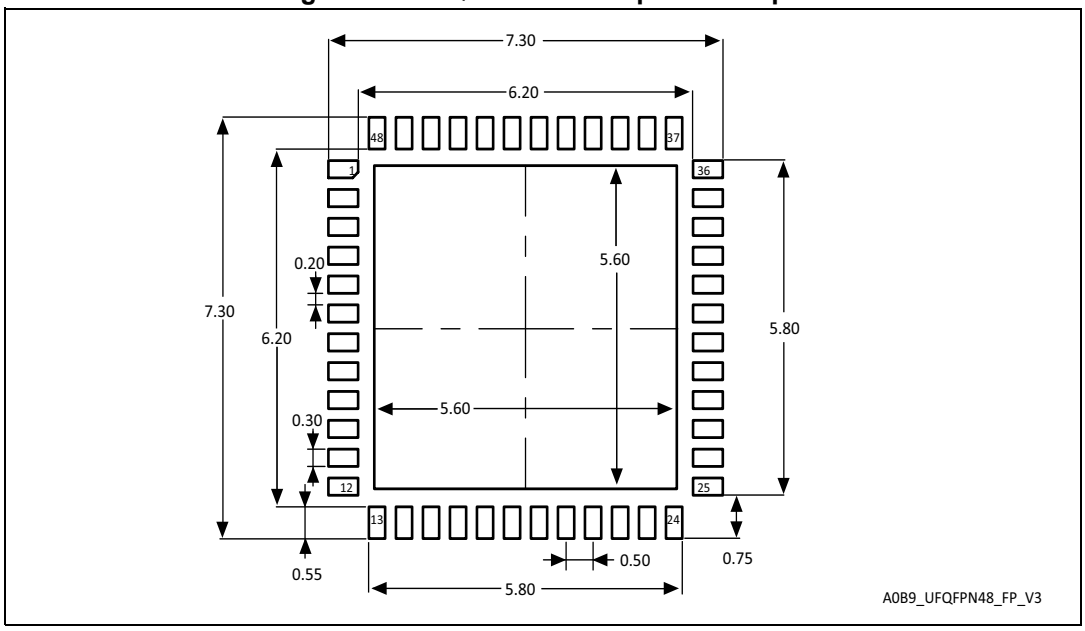

1. Dimensions are expressed in millimeters.

6.4 LFBGA100 package information (H0)

Figure 45. LFBGA100 – 100-ball low profile fine pitch ball grid array, 10 x 10 mm, 0.8 mm pitch, package outline

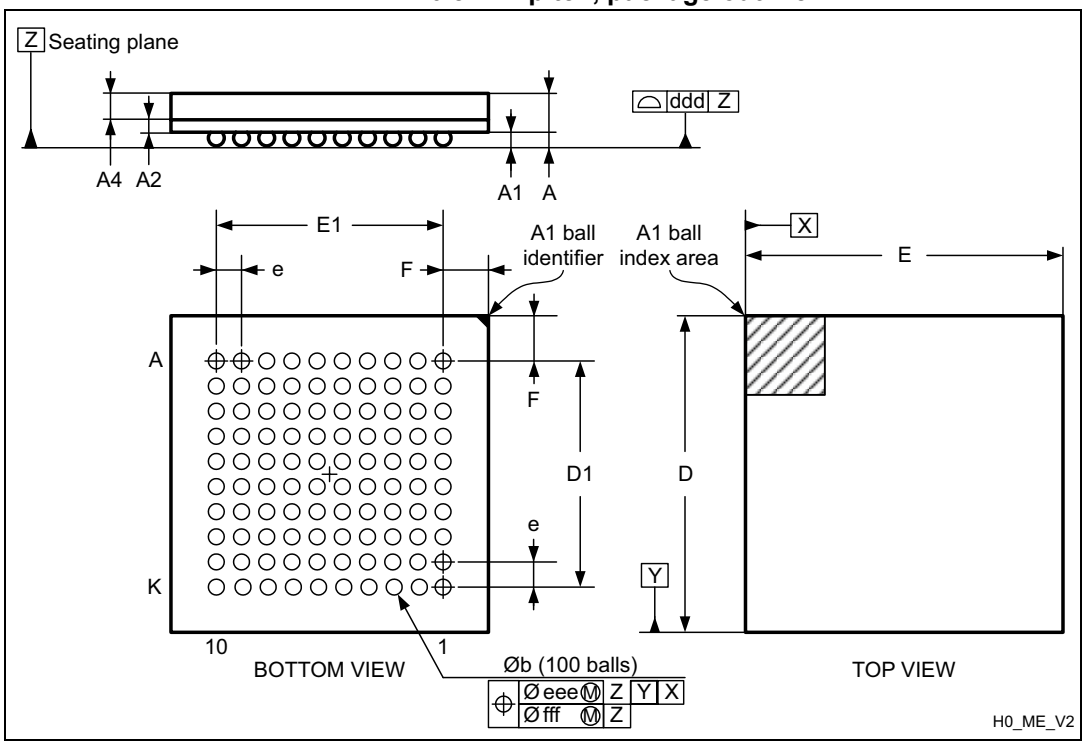

1. Drawing is not to scale.

Table 54. LFBGA100 – 100-ball low profile fine pitch ball grid array, 10 x 10 mm, 0.8 mm pitch, package mechanical data

Symbol	millimeters			inches(1)		
	Min	Typ	Max	Typ	Min	Max
A	-	-	1.700			0.0669
A1	0.270	-	-	0.0106		
A2	-	0.300	-		0.0118	
A4	-	-	0.800	-	-	0.0315
b	0.450	0.500	0.550	0.0177	0.0197	0.0217
D	9.850	10.000	10.150	0.3878	0.3937	0.3996
D1	-	7.200	-	-	0.2835	-
E	9.850	10.000	10.150	0.3878	0.3937	0.3996
E1	-	7.200	-	-	0.2835	-
e	-	0.800	-	-	0.0315	-
F	-	1.400	-	-	0.0551	-
ddd	-	-	0.120	-	-	0.0047

Table 54. LFBGA100 – 100-ball low profile fine pitch ball grid array, 10 x 10 mm, 0.8 mm pitch, package mechanical data (continued)

Symbol	millimeters			inches[1]		
	Min	Typ	Max	Typ	Min	Max
eee	-	-	0.150	-	-	0.0059
fff	-	-	0.080	-	-	0.0031

1. Values in inches are converted from mm and rounded to 4 decimal digits.

Figure 46. LFBGA100 – 100-ball low profile fine pitch ball grid array, 10 x 10 mm, 0.8 mm pitch, package recommended footprint

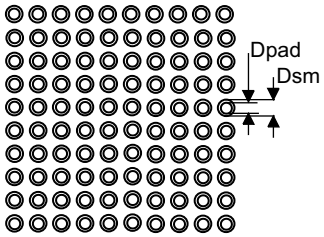

Table 55. LFBGA100 recommended PCB design rules (0.8 mm pitch BGA)

Dimension	Recommended values
Pitch	0.8
Dpad	0.500 mm
Dsm	0.570 mm typ. (depends on the soldermask registration tolerance)
Stencil opening	0.500 mm
Stencil thickness	Between 0.100 mm and 0.125 mm
Pad trace width	0.120 mm

6.5 LQFP100 package information (1L)

This LQFP is 100 lead, 14 x 14 mm low-profile quad flat package.

Note: See list of notes in the notes section.

Figure 47. LQFP100 - Outline(15)

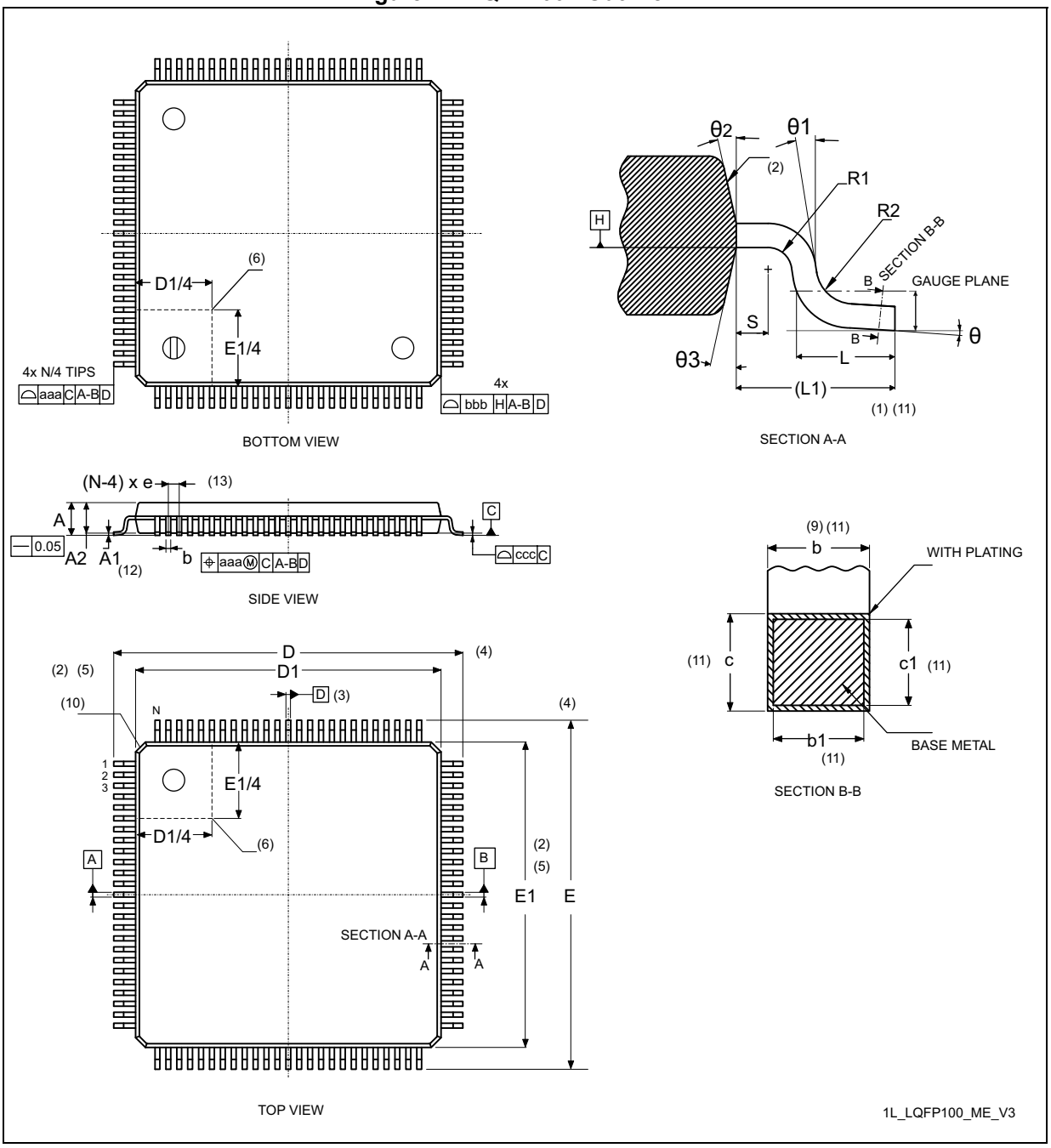

Table 56. LQFP100 - Mechanical data

Symbol	millimeters			inches[14]		
	Min	Typ	Max	Min	Typ	Max
A	-	1.50	1.60	-	0.0590	0.0630
A1[12]	0.05	-	0.15	0.0019	-	0.0059
A2	1.35	1.40	1.45	0.0531	0.0551	0.0570
b[9][11]	0.17	0.22	0.27	0.0067	0.0087	0.0106
b1[11]	0.17	0.20	0.23	0.0067	0.0079	0.0090
c[11]	0.09	-	0.20	0.0035	-	0.0079
c1[11]	0.09	-	0.16	0.0035	-	0.0063
D[4]	16.00 BSC			0.6299 BSC		
D1[2][5]	14.00 BSC			0.5512 BSC		
E[4]	16.00 BSC			0.6299 BSC		
E1[2][5]	14.00 BSC			0.5512 BSC		
e	0.50 BSC			0.0197 BSC		
L	0.45	0.60	0.75	0.177	0.0236	0.0295
L1[1][11]	1.00			-	0.0394	-
N[13]	100					
θ	0°	3.5°	7°	0°	3.5°	7°
θ1	0°	-	-	0°	-	-
θ2	10°	12°	14°	10°	12°	14°
θ3	10°	12°	14°	10°	12°	14°
R1	0.08	-	-	0.0031	-	-
R2	0.08	-	0.20	0.0031	-	0.0079
S	0.20	-	-	0.0079	-	-
aaa[1]	0.20			0.0079		
bbb[1]	0.20			0.0079		
ccc[1]	0.08			0.0031		
ddd[1]	0.08			0.0031		

Notes:

1. Dimensioning and tolerancing schemes conform to ASME Y14.5M-1994.
2. The Top package body size may be smaller than the bottom package size by as much as 0.15 mm.
3. Datums A-B and D to be determined at datum plane H.
4. To be determined at seating datum plane C.
5. Dimensions D1 and E1 do not include mold flash or protrusions. Allowable mold flash or protrusions is “0.25 mm” per side. D1 and E1 are Maximum plastic body size dimensions including mold mismatch.
6. Details of pin 1 identifier are optional but must be located within the zone indicated.
7. All Dimensions are in millimeters.
8. No intrusion allowed inwards the leads.
9. Dimension “b” does not include dambar protrusion. Allowable dambar protrusion shall not cause the lead width to exceed the maximum “b” dimension by more than 0.08 mm. Dambar cannot be located on the lower radius or the foot. Minimum space between protrusion and an adjacent lead is 0.07 mm for 0.4 mm and 0.5 mm pitch packages.
10. Exact shape of each corner is optional.
11. These dimensions apply to the flat section of the lead between 0.10 mm and 0.25 mm from the lead tip.
12. A1 is defined as the distance from the seating plane to the lowest point on the package body.
13. “N” is the number of terminal positions for the specified body size.
14. Values in inches are converted from mm and rounded to 4 decimal digits.
15. Drawing is not to scale.

Figure 48. LQFP100 - Footprint example

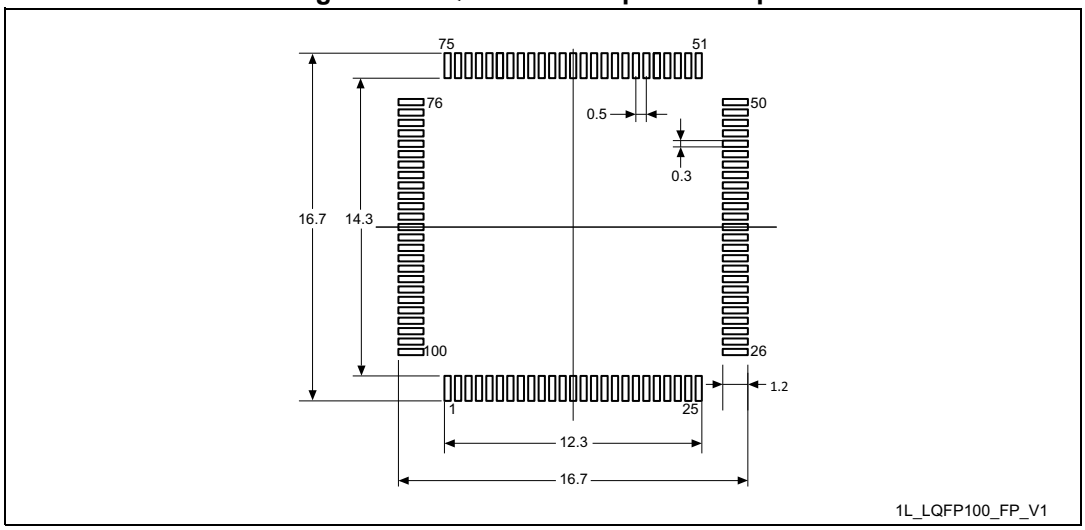

1. Dimensions are expressed in millimeters.

6.6 UFBGA100 package information (A0C2)

This UFBGA is a 100-ball, 7 x 7 mm, 0.50 mm pitch, ultra fine pitch ball grid array package.

Note: See list of notes in the notes section.

Figure 49. UFBGA100 - Outline(13)

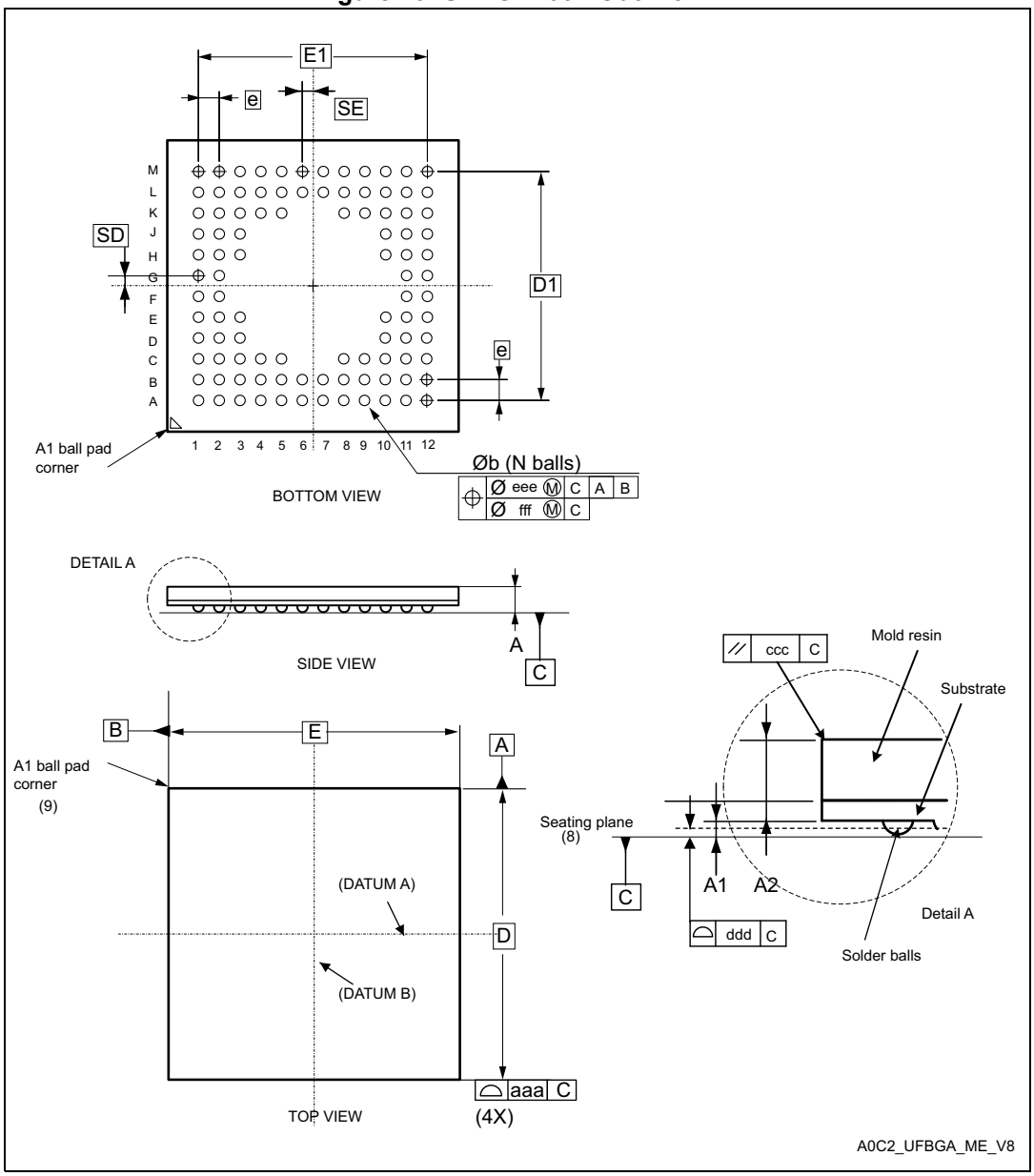

Table 57. UFBGA100 - Mechanical data

Symbol	millimeters(1)			inches(12)		
	Min.	Typ.	Max.	Min.	Typ.	Max.
A(2)(3)	-	-	0.60	-	-	0.0236
A1(4)	0.05	-	-	0.0020	-	-
A2	-	0.43	-	-	0.0169	-
b(5)	0.23	0.28	0.33	0.0090	0.0110	0.0130
D(6)	7.00 BSC			0.2756 BSC		
D1	5.50 BSC			0.2165 BSC		
E	7.00 BSC			0.2756 BSC		
E1	5.50 BSC			0.2165 BSC		
e(9)	0.50 BSC			0.0197 BSC		
N(11)	100					
SD(12)	0.25 BSC			0.0098 BSC		
SE(12)	0.25 BSC			0.0098 BSC		
aaa	0.15			0.0059		
ccc	0.20			0.0079		
ddd	0.08			0.0031		
eee	0.15			0.0059		
fff	0.05			0.0020		

Notes:

1. Dimensioning and tolerancing schemes conform to ASME Y14.5M-2009 apart European projection.
2. UFBGA stands for ulta profile fine pitch ball grid array: 0.50 mm < A ≤ 0.65 mm / fine pitch e < 1.00 mm.
3. The profile height, A, is the distance from the seating plane to the highest point on the package. It is measured perpendicular to the seating plane.
4. A1 is defined as the distance from the seating plane to the lowest point on the package body.
5. Dimension b is measured at the maximum diameter of the terminal (ball) in a plane parallel to primary datum C.
6. BSC stands for BASIC dimensions. It corresponds to the nominal value and has no tolerance. For tolerances refer to form and position table. On the drawing these dimensions are framed.
7. Primary datum C is defined by the plane established by the contact points of three or more solder balls that support the device when it is placed on top of a planar surface.
8. The terminal (ball) A1 corner must be identified on the top surface of the package by using a corner chamfer, ink or metalized markings, or other feature of package body or

integral heat slug. A distinguish feature is allowable on the bottom surface of the package to identify the terminal A1 corner. Exact shape of each corner is optional.

9. e represents the solder ball grid pitch.
10. N represents the total number of balls on the BGA.
11. Basic dimensions SD and SE are defined with respect to datums A and B. It defines the position of the centre ball(s) in the outer row or column of a fully populated matrix.
12. Values in inches are converted from mm and rounded to 4 decimal digits.
13. Drawing is not to scale.

Figure 50. UFBGA100 - Footprint example

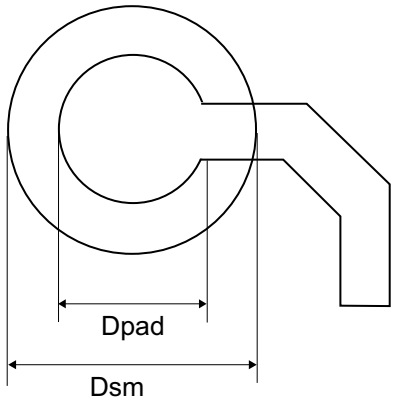

Table 58. UFBGA100 - Example of PCB design rules (0.5 mm pitch BGA)

Dimension	Values
Pitch	0.50 mm
Dpad	0.280 mm
Dsm	0.370 mm typ. (depends on the solder mask registration tolerance)
Stencil opening	0.280 mm
Stencil thickness	Between 0.100 mm and 0.125 mm

6.7 LQFP64 package information (5W)

This LQFP is 64-pin, 10 x 10 mm low-profile quad flat package.

Note: See list of notes in the notes section.

Figure 51. LQFP64 - Outline(15)

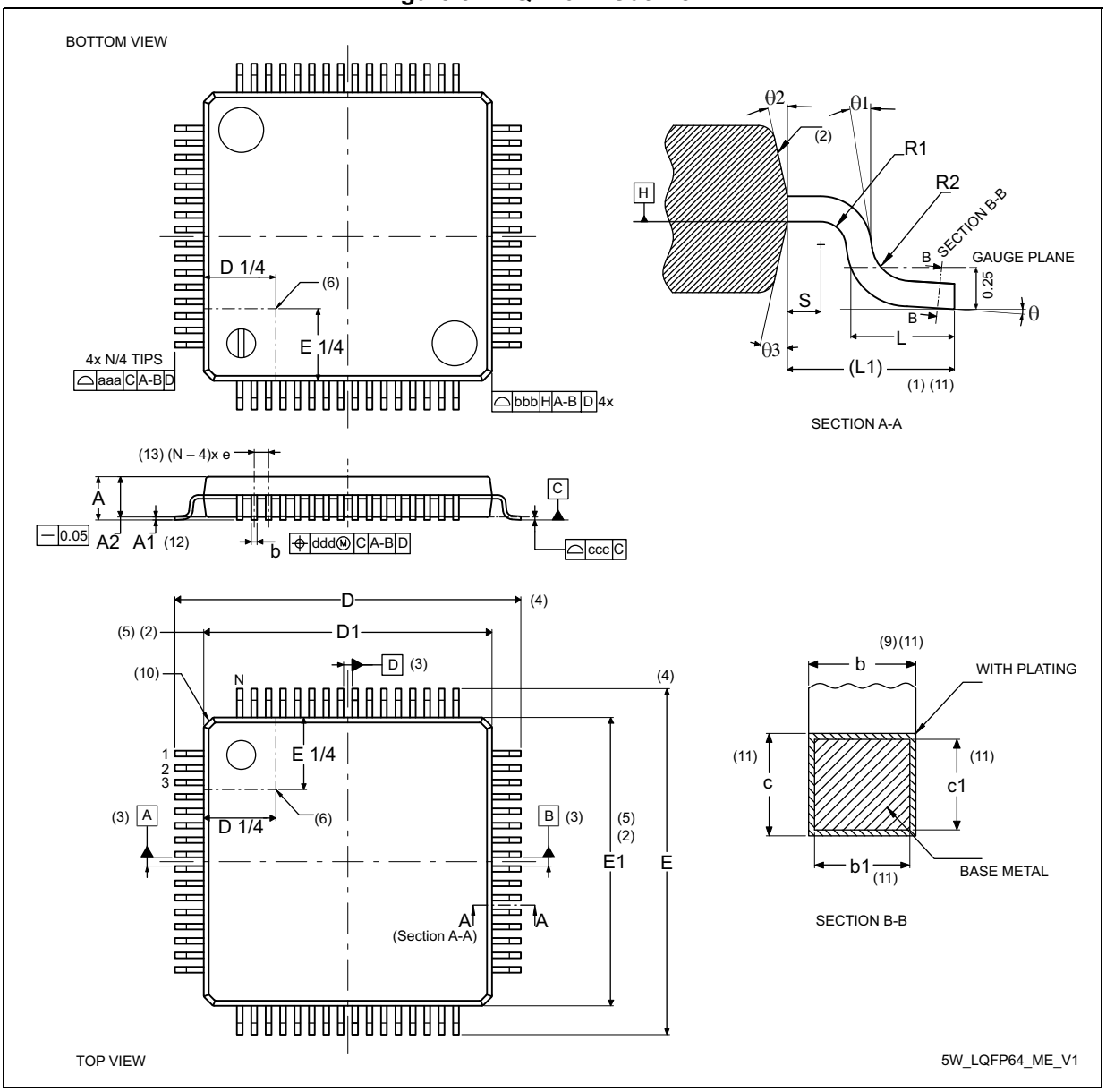

Table 59. LQFP64 - Mechanical data

Symbol	millimeters			inches[14]		
	Min	Typ	Max	Min	Typ	Max
A	-	-	1.60	-	-	0.0630
A1[12]	0.05	-	0.15	0.0020	-	0.0059
A2	1.35	1.40	1.45	0.0531	0.0551	0.0570
b[9][11]	0.17	0.22	0.27	0.0067	0.0087	0.0106
b1[11]	0.17	0.20	0.23	0.0067	0.0079	0.0091
c[11]	0.09	-	0.20	0.0035	-	0.0079
c1[11]	0.09	-	0.16	0.0035	-	0.0063
D[4]	12.00 BSC			0.4724 BSC		
D1[2][5]	10.00 BSC			0.3937 BSC		
E[4]	12.00 BSC			0.4724 BSC		
E1[2][5]	10.00 BSC			0.3937 BSC		
e	0.50 BSC			0.1970 BSC		
L	0.45	0.60	0.75	0.0177	0.0236	0.0295
L1	1.00 REF			0.0394 REF		
N[13]	64					
θ	0°	3.5°	7°	0°	3.5°	7°
θ1	0°	-	-	0°	-	-
θ2	10°	12°	14°	10°	12°	14°
θ3	10°	12°	14°	10°	12°	14°
R1	0.08	-	-	0.0031	-	-
R2	0.08	-	0.20	0.0031	-	0.0079
S	0.20	-	-	0.0079	-	-
aaa[1]	0.20			0.0079		
bbb[1]	0.20			0.0079		
ccc[1]	0.08			0.0031		
ddd[1]	0.08			0.0031		

Notes:

1. Dimensioning and tolerancing schemes conform to ASME Y14.5M-1994.
2. The Top package body size may be smaller than the bottom package size by as much as 0.15 mm.
3. Datums A-B and D to be determined at datum plane H.
4. To be determined at seating datum plane C.
5. Dimensions D1 and E1 do not include mold flash or protrusions. Allowable mold flash or protrusions is “0.25 mm” per side. D1 and E1 are Maximum plastic body size dimensions including mold mismatch.
6. Details of pin 1 identifier are optional but must be located within the zone indicated.
7. All Dimensions are in millimeters.
8. No intrusion allowed inwards the leads.
9. Dimension “b” does not include dambar protrusion. Allowable dambar protrusion shall not cause the lead width to exceed the maximum “b” dimension by more than 0.08 mm. Dambar cannot be located on the lower radius or the foot. Minimum space between protrusion and an adjacent lead is 0.07 mm for 0.4 mm and 0.5 mm pitch packages.
10. Exact shape of each corner is optional.
11. These dimensions apply to the flat section of the lead between 0.10 mm and 0.25 mm from the lead tip.
12. A1 is defined as the distance from the seating plane to the lowest point on the package body.
13. “N” is the number of terminal positions for the specified body size.
14. Values in inches are converted from mm and rounded to 4 decimal digits.
15. Drawing is not to scale.

Figure 52. LQFP64 - Footprint example

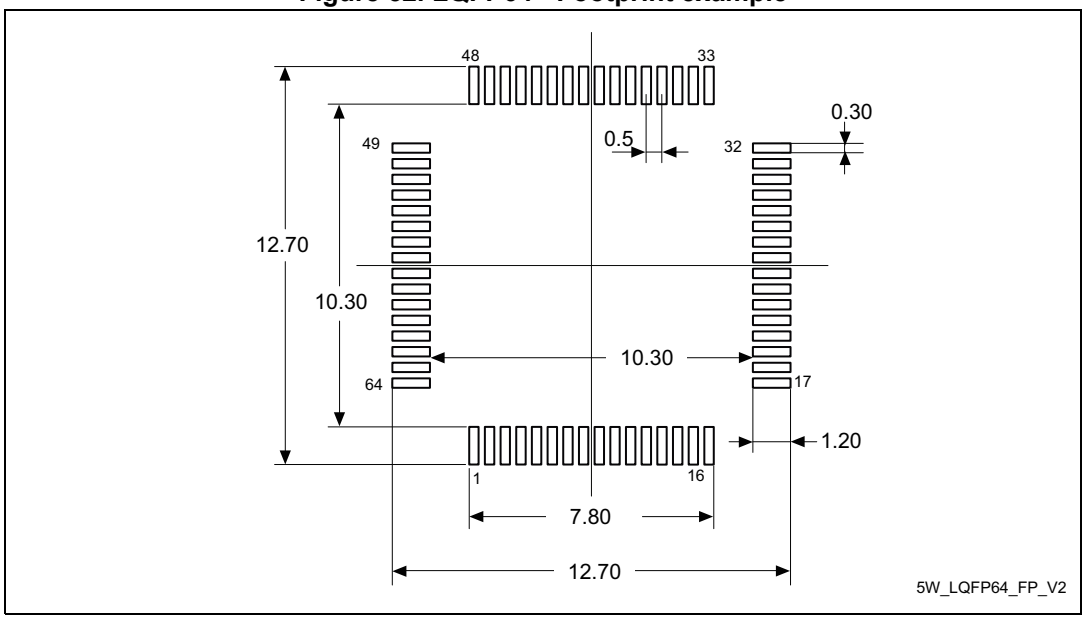

1. Dimensions are expressed in millimeters.

6.8 TFBGA64 package information (R8)

Figure 53. TFBGA64 – 64-ball, 5 x 5 mm, 0.5 mm pitch thin profile fine pitch ball grid array package outline

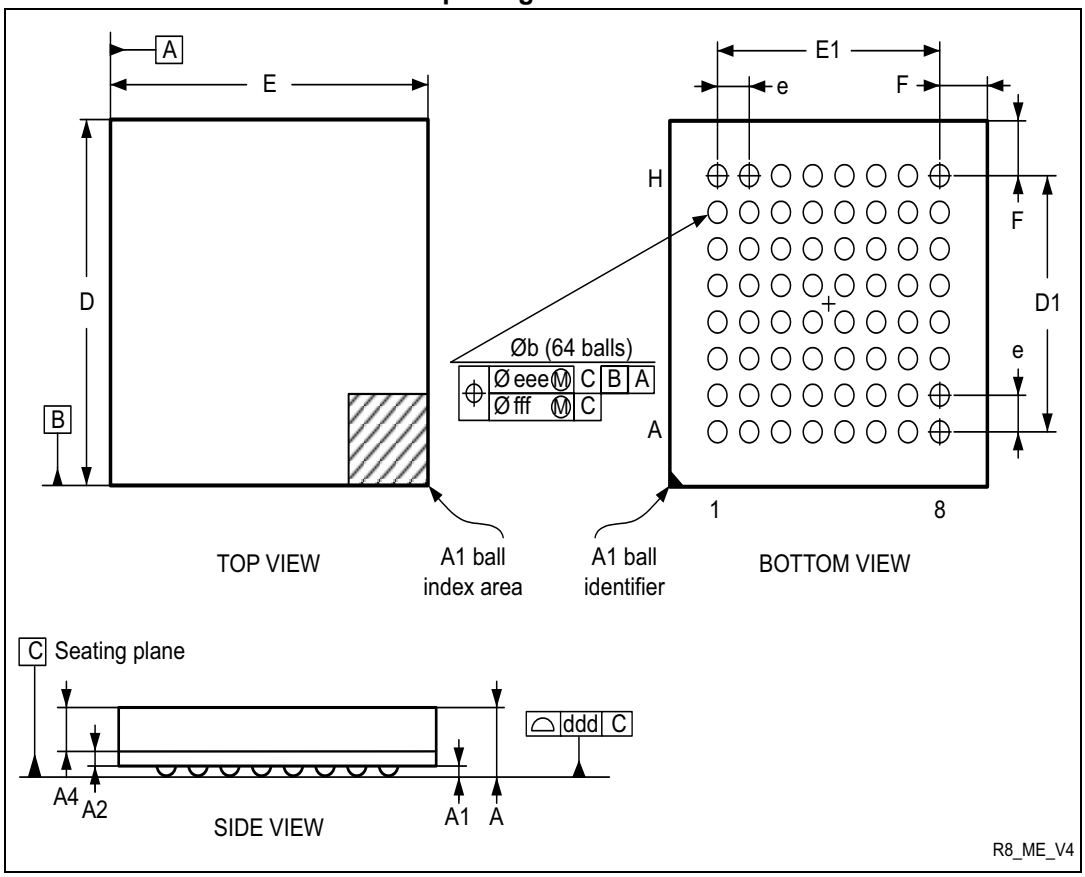

1. Drawing is not to scale.

Table 60. TFBGA64 – 64-ball, 5 x 5 mm, 0.5 mm pitch, thin profile fine pitch ball grid array package mechanical data

Symbol	millimeters			inches(1)		
	Min	Typ	Max	Min	Typ	Max
A	-	-	1.200	-	-	0.0472
A1	0.150	-	-	0.0059	-	-
A2	-	0.200	-	-	0.0079	-
A4	-	-	0.600	-	-	0.0236
b	0.250	0.300	0.350	0.0098	0.0118	0.0138
D	4.850	5.000	5.150	0.1909	0.1969	0.2028
D1	-	3.500	-	-	0.1378	-
E	4.850	5.000	5.150	0.1909	0.1969	0.2028

Table 60. TFBGA64 – 64-ball, 5 x 5 mm, 0.5 mm pitch, thin profile fine pitch ball grid array package mechanical data (continued)

Symbol	millimeters			inches[1]		
	Min	Typ	Max	Min	Typ	Max
E1	-	3.500	-	-	0.1378	-
e	-	0.500	-	-	0.0197	-
F	-	0.750	-	-	0.0295	-
ddd	-	-	0.080	-	-	0.0031
eee	-	-	0.150	-	-	0.0059
fff	-	-	0.050	-	-	0.0020

1. Values in inches are converted from mm and rounded to 4 decimal digits.

Figure 54. TFBGA64 – 64-ball, 5 x 5 mm, 0.5 mm pitch, thin profile fine pitch ball grid array , recommended footprint

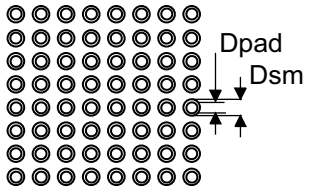

Table 61. TFBGA64 recommended PCB design rules (0.5 mm pitch BGA)

Dimension	Recommended values
Pitch	0.5
Dpad	0.280 mm
Dsm	0.370 mm typ. (depends on the soldermask registration tolerance)
Stencil opening	0.280 mm
Stencil thickness	Between 0.100 mm and 1.125 mm
Pad trace width	0.100 mm

6.9 LQFP48 package information (5B)

This LQFP is a 48-pin, 7 x 7 mm low-profile quad flat package

Note: See list of notes in the notes section.

Figure 55. LQFP48 – Outline(15)

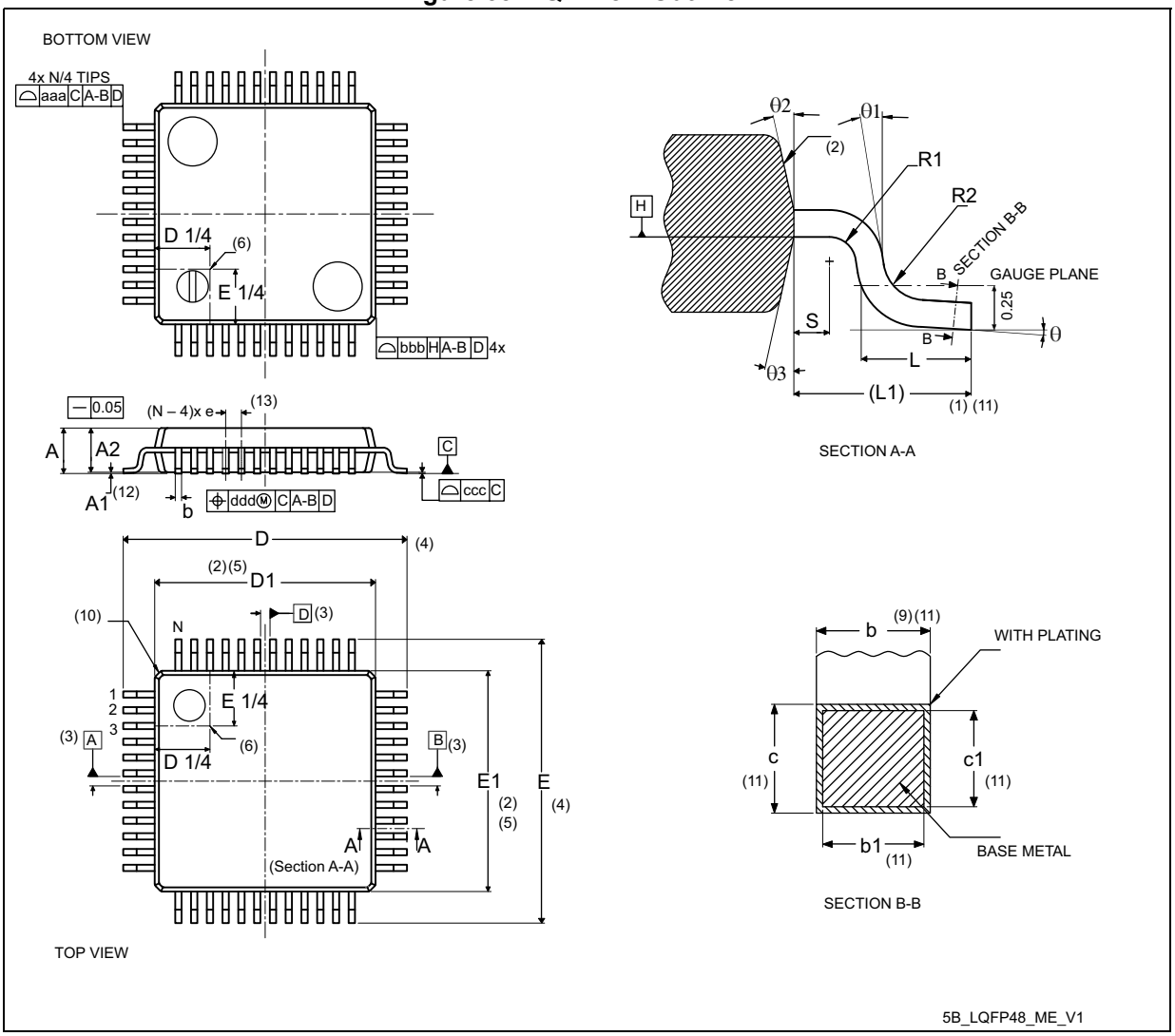

Table 62. LQFP48 – Mechanical data

Symbol	millimeters			inches[14]		
	Min	Typ	Max	Min	Typ	Max
A	-	-	1.60	-	-	0.0630
A1[12]	0.05	-	0.15	0.0020	-	0.0059
A2	1.35	1.40	1.45	0.0531	0.0551	0.0571
b[9][11]	0.17	0.22	0.27	0.0067	0.0087	0.0106
b1[11]	0.17	0.20	0.23	0.0067	0.0079	0.0090
c[11]	0.09	-	0.20	0.0035	-	0.0079
c1[11]	0.09	-	0.16	0.0035	-	0.0063
D[4]	9.00 BSC			0.3543 BSC		
D1[2][5]	7.00 BSC			0.2756 BSC		
E[4]	9.00 BSC			0.3543 BSC		
E1[2][5]	7.00 BSC			0.2756 BSC		
e	0.50 BSC			0.1970 BSC		
L	0.45	0.60	0.75	0.0177	0.0236	0.0295
L1	1.00 REF			0.0394 REF		
N[13]	48					
θ	0°	3.5°	7°	0°	3.5°	7°
θ1	0°	-	-	0°	-	-
θ2	10°	12°	14°	10°	12°	14°
θ3	10°	12°	14°	10°	12°	14°
R1	0.08	-	-	0.0031	-	-
R2	0.08	-	0.20	0.0031	-	0.0079
S	0.20	-	-	0.0079	-	-
aaa[1][7]	0.20			0.0079		
bbb[1][7]	0.20			0.0079		
ccc[1][7]	0.08			0.0031		
ddd[1][7]	0.08			0.0031		

Notes:

1. Dimensioning and tolerancing schemes conform to ASME Y14.5M-1994.
2. The Top package body size may be smaller than the bottom package size by as much as 0.15 mm.
3. Datums A-B and D to be determined at datum plane H.
4. To be determined at seating datum plane C.
5. Dimensions D1 and E1 do not include mold flash or protrusions. Allowable mold flash or protrusions is “0.25 mm” per side. D1 and E1 are Maximum plastic body size dimensions including mold mismatch.
6. Details of pin 1 identifier are optional but must be located within the zone indicated.
7. All Dimensions are in millimeters.
8. No intrusion allowed inwards the leads.
9. Dimension “b” does not include dambar protrusion. Allowable dambar protrusion shall not cause the lead width to exceed the maximum “b” dimension by more than 0.08 mm. Dambar cannot be located on the lower radius or the foot. Minimum space between protrusion and an adjacent lead is 0.07 mm for 0.4 mm and 0.5 mm pitch packages.
10. Exact shape of each corner is optional.
11. These dimensions apply to the flat section of the lead between 0.10 mm and 0.25 mm from the lead tip.
12. A1 is defined as the distance from the seating plane to the lowest point on the package body.
13. “N” is the number of terminal positions for the specified body size.
14. Values in inches are converted from mm and rounded to 4 decimal digits.
15. Drawing is not to scale.

Figure 56. LQFP48 – Footprint example

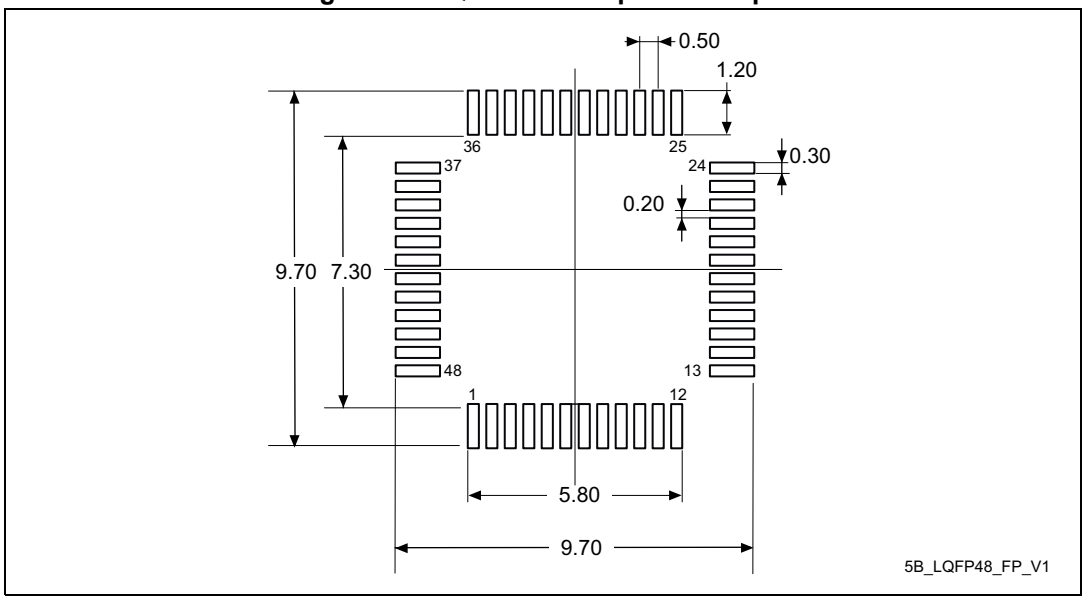

1. Dimensions are expressed in millimeters.

6.10 Thermal characteristics

The maximum chip junction temperature ($T_J$max) must never exceed the values given in *Table 9: General operating conditions*.

The maximum chip-junction temperature, T_J max, in degrees Celsius, may be calculated using the following equation:

$$T_J \text{ max} = T_A \text{ max} + (P_D \text{ max} \times \Theta_{JA})$$

where:

- T_A max is the maximum ambient temperature in °C,
- Θ_{JA} is the package junction-to-ambient thermal resistance, in °C/W,
- P_D max is the sum of P_{INT} max and $P_{I/O}$ max (P_D max = P_{INT} max + $P_{I/O}$max),
- P_{INT} max is the product of I_{DD} and V_{DD}, expressed in Watts. This is the maximum chip internal power.

$P_{I/O}$ max represents the maximum power dissipation on output pins where:

$$P_{I/O} \text{ max} = \Sigma (V_{OL} \times I_{OL}) + \Sigma((V_{DD} - V_{OH}) \times I_{OH}),$$

taking into account the actual V_{OL} / I_{OL} and V_{OH} / I_{OH} of the I/Os at low and high level in the application.

Table 63. Package thermal characteristics

Symbol	Parameter	Value	Unit
Θ_{JA}	**Thermal resistance junction-ambient** LFBGA100 - 10 × 10 mm / 0.8 mm pitch	44	°C/W
	Thermal resistance junction-ambient LQFP100 - 14 × 14 mm / 0.5 mm pitch	46	
	Thermal resistance junction-ambient UFBGA100 - 7 × 7 mm / 0.5 mm pitch	59	
	Thermal resistance junction-ambient LQFP64 - 10 × 10 mm / 0.5 mm pitch	45	
	Thermal resistance junction-ambient TFBGA64 - 5 × 5 mm / 0.5 mm pitch	65	
	Thermal resistance junction-ambient LQFP48 - 7 x 7 mm / 0.5 mm pitch	55	
	Thermal resistance junction-ambient UFQFPN 48 - 7 × 7 mm / 0.5 mm pitch	32	
	Thermal resistance junction-ambient VFQFPN 36 - 6 × 6 mm / 0.5 mm pitch	18	

6.10.1 Reference document

JESD51-2 Integrated Circuits Thermal Test Method Environment Conditions - Natural Convection (Still Air). Available from www.jedec.org.

6.10.2 Selecting the product temperature range

When ordering the microcontroller, the temperature range is specified in the ordering information scheme shown in *Section 7*.

Each temperature range suffix corresponds to a specific guaranteed ambient temperature at maximum dissipation and, to a specific maximum junction temperature.

As applications do not commonly use the STM32F103xx at maximum dissipation, it is useful to calculate the exact power consumption and junction temperature to determine which temperature range will be best suited to the application.

The following examples show how to calculate the temperature range needed for a given application.

Example 1: High-performance application

Assuming the following application conditions:

Maximum ambient temperature T_{Amax} = 82 °C (measured according to JESD51-2), I_{DDmax} = 50 mA, V_{DD} = 3.5 V, maximum 20 I/Os used at the same time in output at low level with I_{OL} = 8 mA, V_{OL}= 0.4 V and maximum 8 I/Os used at the same time in output at low level with I_{OL} = 20 mA, V_{OL}= 1.3 V

P_{INTmax} = 50 mA × 3.5 V= 175 mW

P_{IOmax} = 20 × 8 mA × 0.4 V + 8 × 20 mA × 1.3 V = 272 mW

This gives: P_{INTmax} = 175 mW and P_{IOmax} = 272 mW:

P_{Dmax} = 175 + 272 = 447 mW

Thus: P_{Dmax} = 447 mW

Using the values obtained in *Table 63* T_{Jmax} is calculated as follows:

– For LQFP100, 46 °C/W

T_{Jmax} = 82 °C + (46 °C/W × 447 mW) = 82 °C + 20.6 °C = 102.6 °C

This is within the range of the suffix 6 version parts (–40 < T_J < 105°C).

In this case, parts must be ordered at least with the temperature range suffix 6 (see *Section 7*).

Example 2: High-temperature application

Using the same rules, it is possible to address applications that run at high ambient temperatures with a low dissipation, as long as junction temperature T_J remains within the specified range.

Assuming the following application conditions:

Maximum ambient temperature T_{Amax} = 115 °C (measured according to JESD51-2), I_{DDmax} = 20 mA, V_{DD} = 3.5 V, maximum 20 I/Os used at the same time in output at low level with I_{OL} = 8 mA, V_{OL}= 0.4 V

P_{INTmax} = 20 mA × 3.5 V= 70 mW

P_{IOmax} = 20 × 8 mA × 0.4 V = 64 mW

This gives: P_{INTmax} = 70 mW and P_{IOmax} = 64 mW:

P_{Dmax} = 70 + 64 = 134 mW

Thus: P_{Dmax} = 134 mW

Using the values obtained in *Table 63* T_{Jmax} is calculated as follows:

– For LQFP100, 46 °C/W

T_{Jmax} = 115 °C + (46 °C/W × 134 mW) = 115 °C + 6.2 °C = 121.2 °C

This is within the range of the suffix 7 version parts (–40 < T_J < 125 °C).

In this case, parts must be ordered at least with the temperature range suffix 7 (see *Section 7*).

Figure 57. LQFP100 P_D max vs. T_A

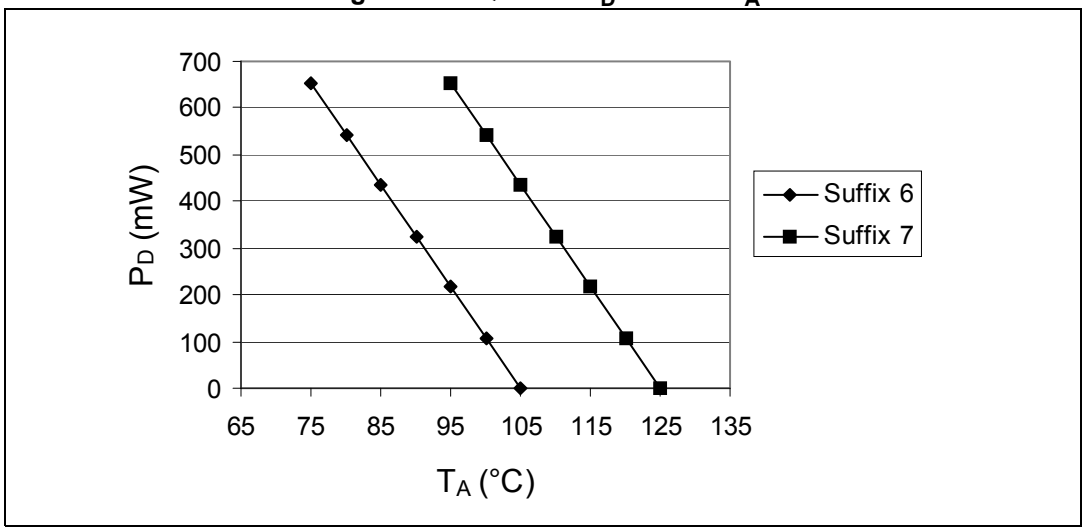

7 Ordering information scheme

Example: STM32 F 103 C 8 T 7 **x**xxx

Device family

STM32 = Arm-based 32-bit microcontroller

Product type

F = General-purpose

Device subfamily

103 = Performance line

Pin count

T = 36 pins

C = 48 pins

R = 64 pins

V = 100 pins

Flash memory size

8 = 64 Kbytes of Flash memory

B = 128 Kbytes of Flash memory

Package

H = BGA

I = UFBGA

T = LQFP

U = VFQFPN or UFQFPN

Temperature range

6 = Industrial temperature range, –40 to 85 °C

7 = Industrial temperature range, –40 to 105 °C

Options

x = Blank for standard product and R for customer dedicated code

xxx = programmed parts

TR = tape and reel

For a list of available options (speed, package, etc.) or for further information on any aspect of this device, contact your nearest ST sales office.

8 Important security notice

The STMicroelectronics group of companies (ST) places a high value on product security, which is why the ST product(s) identified in this documentation may be certified by various security certification bodies and/or may implement our own security measures as set forth herein. However, no level of security certification and/or built-in security measures can guarantee that ST products are resistant to all forms of attacks. As such, it is the responsibility of each of ST's customers to determine if the level of security provided in an ST product meets the customer needs both in relation to the ST product alone, as well as when combined with other components and/or software for the customer end product or application. In particular, take note that:

- ST products may have been certified by one or more security certification bodies, such as Platform Security Architecture (www.psacertified.org) and/or Security Evaluation standard for IoT Platforms (www.trustcb.com). For details concerning whether the ST product(s) referenced herein have received security certification along with the level and current status of such certification, either visit the relevant certification standards website or go to the relevant product page on www.st.com for the most up to date information. As the status and/or level of security certification for an ST product can change from time to time, customers should re-check security certification status/level as needed. If an ST product is not shown to be certified under a particular security standard, customers should not assume it is certified.
- Certification bodies have the right to evaluate, grant and revoke security certification in relation to ST products. These certification bodies are therefore independently responsible for granting or revoking security certification for an ST product, and ST does not take any responsibility for mistakes, evaluations, assessments, testing, or other activity carried out by the certification body with respect to any ST product.
- Industry-based cryptographic algorithms (such as AES, DES, or MD5) and other open standard technologies which may be used in conjunction with an ST product are based on standards which were not developed by ST. ST does not take responsibility for any flaws in such cryptographic algorithms or open technologies or for any methods which have been or may be developed to bypass, decrypt or crack such algorithms or technologies.
- While robust security testing may be done, no level of certification can absolutely guarantee protections against all attacks, including, for example, against advanced attacks which have not been tested for, against new or unidentified forms of attack, or against any form of attack when using an ST product outside of its specification or intended use, or in conjunction with other components or software which are used by customer to create their end product or application. ST is not responsible for resistance against such attacks. As such, regardless of the incorporated security features and/or any information or support that may be provided by ST, each customer is solely responsible for determining if the level of attacks tested for meets their needs, both in relation to the ST product alone and when incorporated into a customer end product or application.
- All security features of ST products (inclusive of any hardware, software, documentation, and the like), including but not limited to any enhanced security features added by ST, are provided on an "AS IS" BASIS. AS SUCH, TO THE EXTENT PERMITTED BY APPLICABLE LAW, ST DISCLAIMS ALL WARRANTIES, EXPRESS OR IMPLIED, INCLUDING BUT NOT LIMITED TO THE IMPLIED WARRANTIES OF MERCHANTABILITY OR FITNESS FOR A PARTICULAR PURPOSE, unless the applicable written and signed contract terms specifically provide otherwise.

9 Revision history

Table 64. Document revision history

Date	Revision	Changes
01-Jun-2007	1	Initial release.
20-Jul-2007	2	Flash memory size modified in Note 9, Note 5, Note 7, Note 7 and BGA100 pins added to Table 5: Medium-density STM32F103xx pin definitions. Figure 3: STM32F103xx performance line LFBGA100 ballout added. T_{HSE} changed to T_{LSE} in Figure 23: Low-speed external clock source AC timing diagram. V_{BAT} ranged modified in Power supply schemes. $t_{SU(LSE)}$ changed to $t_{SU(HSE)}$ in Table 22: HSE 4-16 MHz oscillator characteristics. $I_{DD(HSI)}$ max value added to Table 24: HSI oscillator characteristics. Sample size modified and machine model removed in Electrostatic discharge (ESD). Number of parts modified and standard reference updated in Static latch-up. 25 °C and 85 °C conditions removed and class name modified in Table 33: Electrical sensitivities. R_{PU} and R_{PD} min and max values added to Table 35: I/O static characteristics. R_{PU} min and max values added to Table 38: NRST pin characteristics. Figure 32: I2C bus AC waveforms and measurement circuit and Figure 31: Recommended NRST pin protection corrected. Notes removed below Table 9, Table 38, Table 44. I_{DD} typical values changed in Table 11: Maximum current consumption in Run and Sleep modes. Table 39: TIMx characteristics modified. t_{STAB}, V_{REF+} value, t_{lat} and f_{TRIG} added to Table 46: ADC characteristics. In Table: typical endurance and data retention for T_A = 85 °C added, data retention for T_A = 25 °C removed. V_{BG} changed to V_{REFINT} in Table 12: Embedded internal reference voltage. Document title changed. Controller area network (CAN) section modified. Figure 14: Power supply scheme modified. Features on page 1 list optimized. Small text changes.

Table 64. Document revision history (continued)

Date	Revision	Changes
18-Oct-2007	3	STM32F103CBT6, STM32F103T6 and STM32F103T8 root part numbers added (see Table 2: STM32F103xx medium-density device features and peripheral counts) VFQFPN36 package added (see Section 6: Package information). All packages are ECOPACK® compliant. Package mechanical data inch values are calculated from mm and rounded to 4 decimal digits (see Section 6: Package information). Table 5: Medium-density STM32F103xx pin definitions updated and clarified. Table 26: Low-power mode wakeup timings updated. T_A min corrected in Table 12: Embedded internal reference voltage. Note 2 added below Table 22: HSE 4-16 MHz oscillator characteristics. $V_{ESD(CDM)}$ value added to Table 32: ESD absolute maximum ratings. Note 4 added and V_{OH} parameter description modified in Table 36: Output voltage characteristics. Note 1 modified under Table 37: I/O AC characteristics. Equation 1 and Table 47: R_{AIN} max for f_{ADC} = 14 MHz added to Section 5.3.18: 12-bit ADC characteristics. V_{AIN}, t_S max, t_{CONV}, V_{REF+} min and t_{lat} max modified, notes modified and t_{latr} added in Table 46: ADC characteristics. Figure 37: ADC accuracy characteristics updated. Note 1 modified below Figure 38: Typical connection diagram using the ADC. Electrostatic discharge (ESD) on page 59 modified. Number of TIM4 channels modified in Figure 1: STM32F103xx performance line block diagram. Maximum current consumption Table 13, Table 14 and Table 15 updated. V_{hys} modified in Table 35: I/O static characteristics. Table 49: ADC accuracy updated. V_{FESD} value added in Table 30: EMS characteristics. Values corrected, note 2 modified and note 3 removed in Table 26: Low-power mode wakeup timings. Table 16: Typical and maximum current consumptions in Stop and Standby modes: Typical values added for V_{DD}/V_{BAT} = 2.4 V, Note 2 modified, Note 2 added. Table 21: Typical current consumption in Standby mode added. On-chip peripheral current consumption on page 49 added. ACC_{HSI} values updated in Table 24: HSI oscillator characteristics. V_{prog} added to Table 28: Flash memory characteristics. Upper option byte address modified in Figure 11: Memory map. Typical f_{LSI} value added in Table 25: LSI oscillator characteristics and internal RC value corrected from 32 to 40 kHz in entire document. T_{S_temp} added to Table 50: TS characteristics. N_{END} modified in Table. $T_{S_vrefint}$ added to Table 12: Embedded internal reference voltage. Handling of unused pins specified in General input/output characteristics on page 61. All I/Os are CMOS and TTL compliant. Figure 39: Power supply and reference decoupling (V_{REF+} not connected to V_{DDA}) modified. t_{JITTER} and f_{VCO} removed from Table 27: PLL characteristics. Appendix A: Important notes on page 81 added. Added Figure 16, Figure 17, Figure 19 and Figure 21.

Table 64. Document revision history (continued)

Date	Revision	Changes
22-Nov-2007	4	Document status promoted from preliminary data to datasheet. STM32F103xx is USB certified. Small text changes. Power supply schemes on page 15 modified. Number of communication peripherals corrected for STM32F103Tx and number of GPIOs corrected for LQFP package in Table 2: STM32F103xx medium-density device features and peripheral counts. Main function and default alternate function modified for PC14 and PC15 in, Note 6 added and Remap column added in Table 5: Medium-density STM32F103xx pin definitions. V_{DD}–V_{SS} ratings and Note 1 modified in Table 6: Voltage characteristics, Note 1 modified in Table 7: Current characteristics. Note 1 and Note 2 added in Table 11: Embedded reset and power control block characteristics. I_{DD} value at 72 MHz with peripherals enabled modified in Table 14: Maximum current consumption in Run mode, code with data processing running from RAM. I_{DD} value at 72 MHz with peripherals enabled modified in Table 15: Maximum current consumption in Sleep mode, code running from Flash or RAM on page 43. I_{DD_VBAT} typical value at 2.4 V modified and I_{DD_VBAT} maximum values added in Table 16: Typical and maximum current consumptions in Stop and Standby modes. Note added in Table 17 on page 47 and Table 18 on page 48. ADC1 and ADC2 consumption and notes modified in Table 19: Peripheral current consumption. $t_{SU(HSE)}$ and $t_{SU(LSE)}$ conditions modified in Table 22 and Table 23, respectively. Maximum values removed from Table 26: Low-power mode wakeup timings. t_{RET} conditions modified in Table. Figure 14: Power supply scheme corrected. Figure 20: Typical current consumption in Stop mode, with regulator in Low-power mode added. Note removed below Figure 33: SPI timing diagram - slave mode and CPHA = 0. Note added below Figure 34: SPI timing diagram - slave mode and CPHA = 1(1). Details on unused pins removed from General input/output characteristics on page 61. Table 42: SPI characteristics updated. Table 43: USB startup time added. V_{AIN}, t_{lat} and t_{latr} modified, note added and I_{lkg} removed in Table 46: ADC characteristics. Test conditions modified and note added in Table 49: ADC accuracy. Note added below Table 47 and Table 50. Inch values corrected in Table 55: LQPF100 mechanical data, Table 58: LQFP64 mechanical data and Table 60: LQFP48, 7 x 7 mm, 48-pin low-profile quad flat package mechanical data. Θ_{JA} value for VFQFPN36 package added in Table 62: Package thermal characteristics. Order codes replaced by Section 7: Ordering information scheme. MCU ‘s operating conditions modified in Typical current consumption on page 46. Avg_Slope and V_{25} modified in Table 50: TS characteristics. I2C interface characteristics on page 68 modified. Impedance specified in A.4: Voltage glitch on ADC input 0 on page 81.

Table 64. Document revision history (continued)

Date	Revision	Changes
14-Mar-2008	5	Figure 2: Clock tree on page 12 added. Maximum T_J value given in Table 8: Thermal characteristics on page 37. CRC feature added (see CRC (cyclic redundancy check) calculation unit on page 9 and Figure 11: Memory map on page 34 for address). I_{DD} modified in Table 16: Typical and maximum current consumptions in Stop and Standby modes. ACC_{HSI} modified in Table 24: HSI oscillator characteristics on page 54, note 2 removed. P_D, T_A and T_J added, t_{prog} values modified and t_{prog} description clarified in Table 28: Flash memory characteristics on page 56. t_{RET} modified in Table. $V_{NF(NRST)}$ unit corrected in Table 38: NRST pin characteristics on page 66. Table 42: SPI characteristics on page 70 modified. I_{VREF} added to Table 46: ADC characteristics on page 74. Table 48: ADC accuracy - Limited test conditions added. Table 49: ADC accuracy modified. LQFP100 package specifications updated (see Section 6: Package information on page 79). Recommended LQFP100, LQFP 64, LQFP48 and VFQFPN36 footprints added (see Figure 55, Figure 60, Figure 64 and Figure 44). Section 6.9: Thermal characteristics on page 104 modified, Section 6.9.1 and Section 6.9.2 added. Appendix A: Important notes on page 81 removed.
21-Mar-2008	6	Small text changes. Figure 11: Memory map clarified. In Table: N_{END} tested over the whole temperature range, cycling conditions specified for $t_{RET,}$ t_{RET} min modified at T_A = 55 °C V_{25}, Avg_Slope and T_L modified in Table 50: TS characteristics. CRC feature removed.
22-May-2008	7	CRC feature added back. Small text changes. Section 1: Introduction modified. Section 2.2: Full compatibility throughout the family added. I_{DD} at T_A max = 105 °C added to Table 16: Typical and maximum current consumptions in Stop and Standby modes on page 44. I_{DD_VBAT} removed from Table 21: Typical current consumption in Standby mode on page 47. Values added to Table 41: SCL frequency (f_{PCLK1} = 36 MHz, V_{DD_I2C} = 3.3 V) on page 69. Figure 33: SPI timing diagram - slave mode and CPHA = 0 on page 71 modified. Equation 1 corrected. t_{RET} at T_A = 105 °C modified in Table on page 57. V_{USB} added to Table 44: USB DC electrical characteristics on page 73. Figure 65: LQFP100 P_D max vs. T_A on page 106 modified. Axx option added to Table 63: Ordering information scheme on page 110.

Table 64. Document revision history (continued)

Date	Revision	Changes
21-Jul-2008	8	Power supply supervisor updated and V_{DDA} added to Table 9: General operating conditions. Capacitance modified in Figure 14: Power supply scheme on page 36. Table notes revised in Section 5: Electrical characteristics. Table 16: Typical and maximum current consumptions in Stop and Standby modes modified. Data added to Table 16: Typical and maximum current consumptions in Stop and Standby modes and Table 21: Typical current consumption in Standby mode removed. f_{HSE_ext} modified in Table 20: High-speed external user clock characteristics on page 50. f_{PLL_IN} modified in Table 27: PLL characteristics on page 56. Minimum SDA and SCL fall time value for Fast mode removed from Table 40: I2C characteristics on page 68, note 1 modified. $t_{h(NSS)}$ modified in Table 42: SPI characteristics on page 70 and Figure 33: SPI timing diagram - slave mode and CPHA = 0 on page 71. C_{ADC} modified in Table 46: ADC characteristics on page 74 and Figure 38: Typical connection diagram using the ADC modified. Typical T_{S_temp} value removed from Table 50: TS characteristics on page 78. LQFP48 package specifications updated (see Table 60 and Table 64), Section 6: Package information revised. Axx option removed from Table 63: Ordering information scheme on page 110. Small text changes.
22-Sep-2008	9	STM32F103x6 part numbers removed (see Table 63: Ordering information scheme). Small text changes. General-purpose timers (TIMx) and Advanced-control timer (TIM1) on page 18 updated. Notes updated in Table 5: Medium-density STM32F103xx pin definitions on page 28. Note 2 modified below Table 6: Voltage characteristics on page 37, $\|\Delta V_{DDx}\|$ min and $\|\Delta V_{DDx}\|$ min removed. Measurement conditions specified in Section 5.3.5: Supply current characteristics on page 40. I_{DD} in standby mode at 85 °C modified in Table 16: Typical and maximum current consumptions in Stop and Standby modes on page 44. General input/output characteristics on page 61 modified. f_{HCLK} conditions modified in Table 30: EMS characteristics on page 58. Θ_{JA} and pitch value modified for LFBGA100 package in Table 62: Package thermal characteristics. Small text changes.

Table 64. Document revision history (continued)

Date	Revision	Changes
23-Apr-2009	10	I/O information clarified on page 1. Figure 3: STM32F103xx performance line LFBGA100 ballout modified. Figure 11: Memory map modified. Table 4: Timer feature comparison added. PB4, PB13, PB14, PB15, PB3/TRACESWO moved from Default column to Remap column in Table 5: Medium-density STM32F103xx pin definitions. P_D for LFBGA100 corrected in Table 9: General operating conditions. Note modified in Table 13: Maximum current consumption in Run mode, code with data processing running from Flash and Table 15: Maximum current consumption in Sleep mode, code running from Flash or RAM. Table 20: High-speed external user clock characteristics and Table 21: Low-speed external user clock characteristics modified. Figure 20 shows a typical curve (title modified). ACC_{HSI} max values modified in Table 24: HSI oscillator characteristics. TFBGA64 package added (see Table 59 and Table 60). Small text changes.
22-Sep-2009	11	Note 5 updated and Note 4 added in Table 5: Medium-density STM32F103xx pin definitions. V_{RERINT} and T_{Coeff} added to Table 12: Embedded internal reference voltage. I_{DD_VBAT} value added to Table 16: Typical and maximum current consumptions in Stop and Standby modes. Figure 18: Typical current consumption on V_{BAT} (RTC on) added. f_{HSE_ext} min modified in Table 20: High-speed external user clock characteristics. C_{L1} and C_{L2} replaced by C in Table 22: HSE 4-16 MHz oscillator characteristics and Table 23: LSE oscillator characteristics (f_{LSE} = 32.768 kHz), notes modified and moved below the tables. Table 24: HSI oscillator characteristics modified. Conditions removed from Table 26: Low-power mode wakeup timings. Note 1 modified below Figure 24: Typical application with an 8 MHz crystal. IEC 1000 standard updated to IEC 61000 and SAE J1752/3 updated to IEC 61967-2 in Section 5.3.10: EMC characteristics on page 57. Jitter added to Table 27: PLL characteristics. Table 42: SPI characteristics modified. C_{ADC} and R_{AIN} parameters modified in Table 46: ADC characteristics. R_{AIN} max values modified in Table 47: R_{AIN} max for f_{ADC} = 14 MHz. Figure 47: LFBGA100 outline updated.
03-Jun-2010	12	Added STM32F103TB devices. Added VFQFPN48 package. Updated note 2 below Table 40: I^2C characteristics Updated Figure 32: I^2C bus AC waveforms and measurement circuit Updated Figure 31: Recommended NRST pin protection Updated Section 5.3.12: I/O current injection characteristics

Table 64. Document revision history (continued)

Date	Revision	Changes
19-Apr-2011	13	Updated footnotes below Table 6: Voltage characteristics on page 37 and Table 7: Current characteristics on page 37 Updated tw min in Table 20: High-speed external user clock characteristics on page 50 Updated startup time in Table 23: LSE oscillator characteristics (f_{LSE} = 32.768 kHz) on page 53 Added Section 5.3.12: I/O current injection characteristics Updated Section 5.3.13: I/O port characteristics
07-Dec-2012	14	Added UFBGA100 7 x 7 mm. Updated Figure 59: LQFP64, 10 x 10 mm, 64-pin low-profile quad flat package outline to add pin 1 identification.
14-May-2013	15	Replaced VQFN48 package with UQFN48 in cover page packages, Table 2: STM32F103xx medium-density device features and peripheral counts, Figure 9: STM32F103xx performance line UFQFPN48 pinout, Table 2: STM32F103xx medium-density device features and peripheral counts, Table 56: UFBGA100 mechanical data, Table 63: Ordering information scheme and updated Table 62: Package thermal characteristics Added footnote for TFBGA ADC channels in Table 2: STM32F103xx medium-density device features and peripheral counts Updated ‘All GPIOs are high current...’ in Section 2.3.21: GPIOs (general-purpose inputs/outputs) Updated Table 5: Medium-density STM32F103xx pin definitions Corrected Sigma letter in Section 5.1.1: Minimum and maximum values Removed the first sentence in Section 5.3.16: Communications interfaces Added ‘V_{IN}’ in Table 9: General operating conditions Updated first sentence in Output driving current Added note 5. in Table 24: HSI oscillator characteristics Updated ‘V_{IL}’ and ‘V_{IH}’ in Table 35: I/O static characteristics Added notes to Figure 26: Standard I/O input characteristics - CMOS port, Figure 27: Standard I/O input characteristics - TTL port, Figure 28: 5 V tolerant I/O input characteristics - CMOS port and Figure 29: 5 V tolerant I/O input characteristics - TTL port Updated Figure 32: I^2C bus AC waveforms and measurement circuit Updated notes 2 and 3,removed note “the device must internally...” in Table 40: I^2C characteristics Updated title of Table 41: SCL frequency (f_{PCLK1} = 36 MHz, V_{DD_I2C} = 3.3 V) Updated note 2. in Table 49: ADC accuracy Updated Figure 53: UFBGA100 - 100-ball, 7 x 7 mm, 0.50 mm pitch, ultra fine pitch ball grid array package outline and Table 56: UFBGA100 mechanical data Updated Figure 47: LFBGA100 outline and Table 53: LFBGA100 mechanical data Updated Figure 60: TFBGA64 - 8 x 8 active ball array, 5 x 5 mm, 0.5 mm pitch, package outline and Table 59: TFBGA64 - 8 x 8 active ball array, 5 x 5 mm, 0.5 mm pitch, package mechanical data

Table 64. Document revision history (continued)

Date	Revision	Changes
05-Aug-2013	16	Updated the reference for '$V_{ESD(CDM)}$' in Table 32: ESD absolute maximum ratings Corrected 'tf(IO)out' in Figure 30: I/O AC characteristics definition Updated Table 52: UFQFPN48 mechanical data
21-Aug-2015	17	Updated Table 3: STM32F103xx family removing the note. Updated Table 63: Ordering information scheme removing the note. Updated Section 6: Package information and added Section: Marking of engineering samples for all packages. Updated I^2C characteristics, added t_{SP} parameter and note 4 in Table 40: I^2C characteristics. Updated Figure 32: I^2C bus AC waveforms and measurement circuit swapping SCLL and SCLH. Updated Figure 33: SPI timing diagram - slave mode and CPHA = 0. Updated min/max value notes replacing 'Guaranteed by design, not tested in production" by "guaranteed by design". Updated min/max value notes replacing 'based on characterization, not tested in production" by "Guaranteed based on test during characterization". Updated Table 19: Peripheral current consumption.
29-Mar-2022	18	Updated Table 5: Medium-density STM32F103xx pin definitions. Updated Figure 37: ADC accuracy characteristics, Figure 38: Typical connection diagram using the ADC and its footnotes. Minor text edits across the whole document.
18-Sep-2023	19	Updated *Features*. Updated *Section 1: Introduction*. Updated *Figure 11: Memory map*. Updated *Table 24: HSE 4-16 MHz oscillator characteristics* and *Table 25: LSE oscillator characteristics (f_{LSE} = 32.768 kHz)*. Updated *Table 33: EMI characteristics for fHSE = 8 MHz and fHCLK = 48 MHz* and created *Table 34: EMI characteristics for fHSE = 8 MHz and fHCLK = 72 MHz*. Updated *Figure 33: SPI timing diagram - slave mode and CPHA = 0*, *Figure 34: SPI timing diagram - slave mode and CPHA = 1*, and *Figure 35: SPI timing diagram - master mode*. Updated *Table 46: USB startup time*. Added *Section 8: Important security notice*. Updated all packages in *Section 6: Package information*.
28-Jul-2025	20	Updated *Section 7: Ordering information scheme*.

IMPORTANT NOTICE – PLEASE READ CAREFULLY

STMicroelectronics NV and its subsidiaries (“ST”) reserve the right to make changes, corrections, enhancements, modifications, and improvements to ST products and/or to this document at any time without notice. Purchasers should obtain the latest relevant information on ST products before placing orders. ST products are sold pursuant to ST’s terms and conditions of sale in place at the time of order acknowledgement.

Purchasers are solely responsible for the choice, selection, and use of ST products and ST assumes no liability for application assistance or the design of Purchasers’ products.

No license, express or implied, to any intellectual property right is granted by ST herein.

Resale of ST products with provisions different from the information set forth herein shall void any warranty granted by ST for such product.

ST and the ST logo are trademarks of ST. For additional information about ST trademarks, please refer to *www.st.com/trademarks*. All other product or service names are the property of their respective owners.

Information in this document supersedes and replaces information previously supplied in any prior versions of this document.

© 2025 STMicroelectronics – All rights reserved