IN TRYST WITH TESTING

Presented by Brahma

WHAT ARE WE GOING TO KNOW

What is testing

Why testing exists

Types of testing

What I did in testing

What I learnt doing testing

WHAT IS TESTING

Basic terms and definitions

Test

Activity in which a system or component is executed under specified conditions, the results are observed or recorded, and an evaluation is made of some aspect of the system or component [1]

- Do `something` and get `something`

Test Case

A set of **preconditions**, **inputs** and expected **results**, developed to drive the execution of a test item to meet test objectives [1]

- Do `this thing` and see if you get `that thing`

[1] "ISO/IEC/IEEE International Standard - Software and systems engineering --Software testing --Part 1:General concepts," in ISO/IEC/IEEE 29119-1:2022(E) ,27 Jan. 2022, doi: 10.1109/IEEESTD.2022.9698145.

```
// function definition
double add(double a, double b) {
    return a + b;
}
```

HOW DO YOU "FULLY" TEST THIS

Exhaustive Testing

- A double has 64 bits -> 2^{64} combinations)
- You have 2 inputs so 2^{65} combinations
- One test per millisecond
  - Takes 1,169,084,092 years
  - **Nearly 1.17 billion years**
- **Impractical**
- Pointless

How do we reduce the testing burden ?

TESTING BASED ON -EQUIVALENCE CLASSES

Testing based on grouping different inputs (each group is an equivalence class)

- Believing that every input in one group will be treated similarly
- Testing one input in one group means the whole group can be considered tested
  - E.g., If input is a month, then the range will be 1-12
    - So, the grouping can be [-∞..0],[1..12],[13..∞] 3 groups one from each and 3 tests

But what if you have more inputs

- You have 5 inputs ,and each has 5 groups ,that’s 25 classes to test
- You should try the combinations for cross impact
- Test the boundaries
- Testing '0' values
- And some random tests .. for good measure

TESTING BASED ON -COVERAGE

Testing based on Different coverage criteria

- **Statement** coverage [is every line in the code covered ??]
- **Condition** coverage [is every condition in an expression was TRUE and FLASE ??]
- **Decision** Coverage [all decisions are covered … like if/else ,switch, while etc.,]
- **Branch** coverage[same as decision but with implicit conditions also]
- Modified Condition Decision Coverage (**MCDC**)
  - [every input is toggled the output independently]
  - [important for safety critical systems]

WHY IS TESTING REQUIRED ?

Do we need testing !!!

ET TravelWorld

Boeing reports $5.4 bn loss on large hit from 777X aircraft delays

Boeing Loss Report: Boeing faces a $5.4 billion loss in Q3 due to the delayed certification of its 777X aircraft, while Airbus reports...

30 Oct 2025

NASA Shifts Artemis II Launch To March As SLS Rocket's Fuel Test Faces Snag

The space agency terminated Artemis II's wet dress rehearsal countdown at the T-5:15 minute. The rocket experienced a leak at the tail...

2 weeks ago

BBC

https://www.bbc.com › news › articles

Five carmakers go on trial over emissions cheat claims

13 Oct 2025 — A major lawsuit against five leading carmakers accused of **cheating** on **emissions tests** has opened at the High Court in London. Read more

TESTING TAKES 75% OF DEVELOPMENT BUDGET [1]

Testing is one of the boring job in Software lifecycle

- a bored tester

[1] https://ntrs.nasa.gov/api/citations/20190002301/downloads/20190002301.pdf

WHAT WE GET FORM TESTING

- Defects
- Evidence for conformance to
  - Specifications
  - Standards
  - Regulations
- Safe and unsafe scenarios to use a product
- Asses the quality
- Support for decision making

Sometimes it's mandatory to provide test results for certification.

Particularly for safety critical systems [defense, medical, aerospace, automotive, etc.,]

Some confidence that the product works

LAPTOP CHARGER COMPLIANCE MARKING

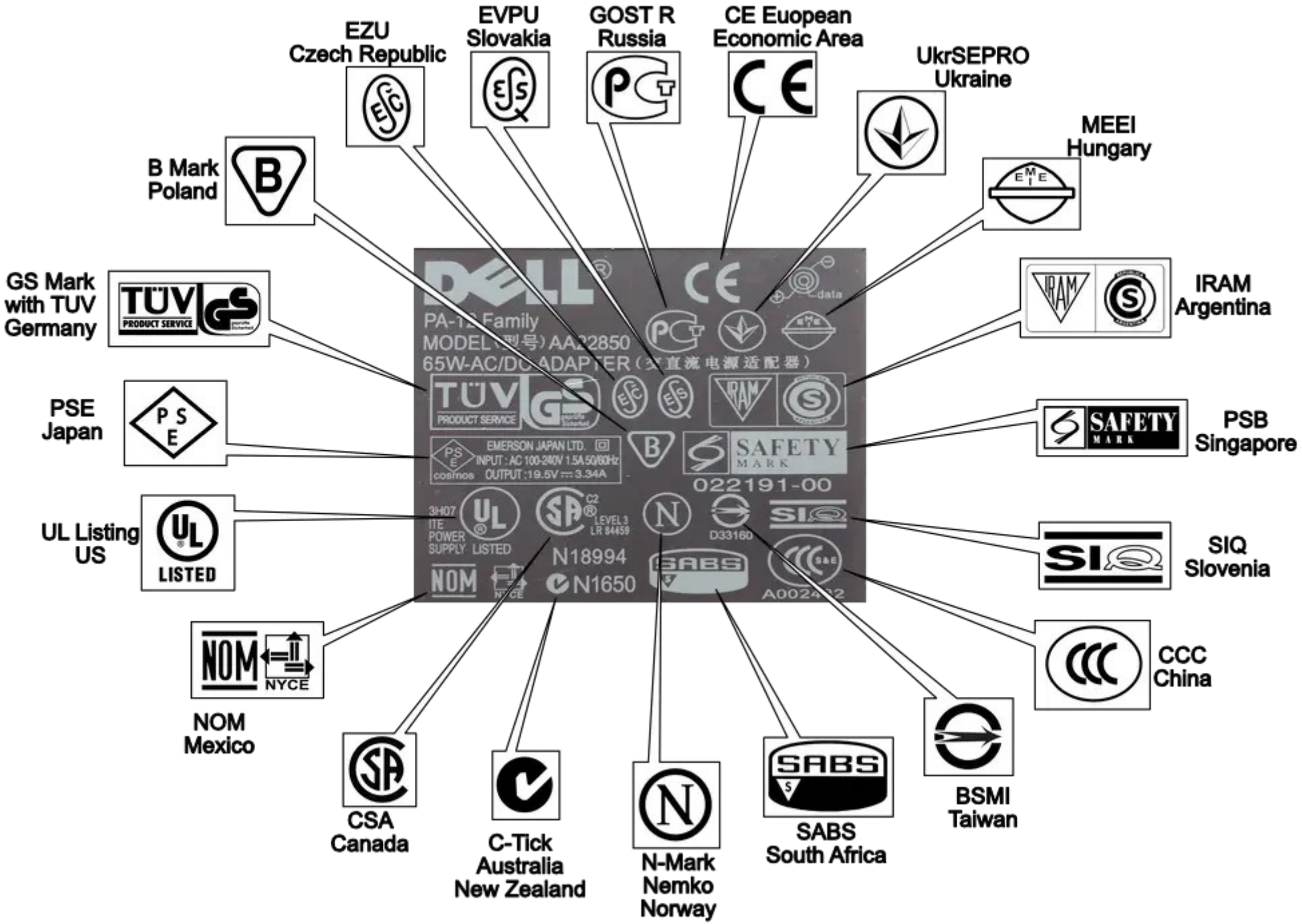

DIFFERENT TYPES OF TESTING

There are more than 1 for sure

THE V-CYCLE OF SOFTWARE DEVELOPMENT

The 4 levels of testing identified are

- Unit Testing
- Integration testing
- System Testing
- Acceptance testing

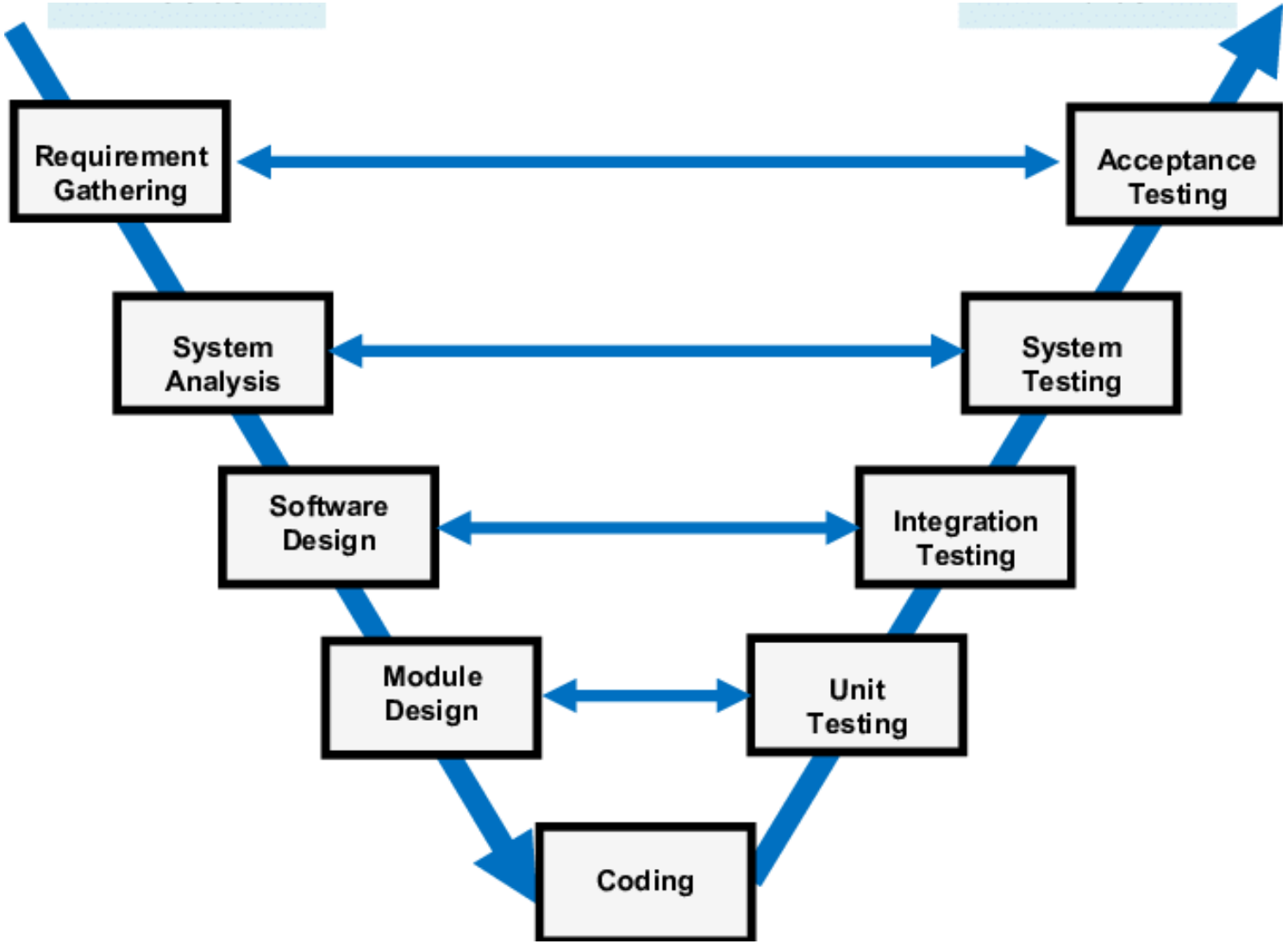

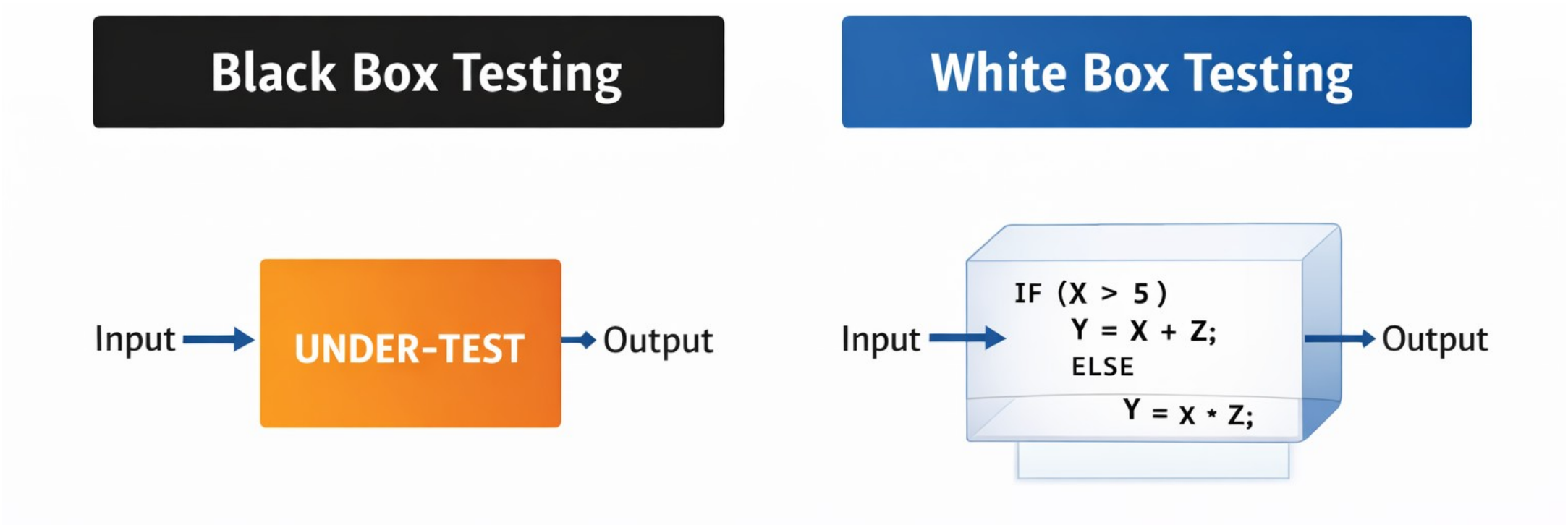

The internal structure in unknown	The internal structure in known
Best source is specification/requirement	Best source is code
Target for functional testing and conformity	Target for Coverage, dataflow testing, data & control coupling (DCCC)
Best suited for system level	Can be used at all levels

WHAT I DID IN TESTING

Starting from the starting 🙄

DOING FIRST TEST

When I started my career as an engineer the fist task given to me was to run an existing test on a test setup.

- Simple straight forward [I did not need to know what it was or why … just how]
- It passed … I was happy
- After 1 month …. Not so happy doing the same thing again and again

The next task was to update a test case… finally some thing interesting

- But I don’t know how to update it
- My senior helped -> simple constant value change
- Tested again … it passed … I was happy
- Few more months passed …. Did small update to test cases … testing became boring

Then came a big update which needed a **new test case**

- But how to write it ??

WRITING FIRST TEST CASE

But how to write it ??

- There will always be a format [may be different for each team or company]
- A General template [1] will have
  - **Unique identifier**
  - Objective
  - Priority
  - Traceability
  - **Preconditions**
  - **Inputs**
  - **Expected results**

Not to be confused with **`Test procedure`**

- Test procedure is a collection of test cases which needs to be executed in a specific order to get expected results, necessary preconditions, and any cleanups post test.

[1] "IEEE/ISO/IEC International Standard for Software and systems engineering--Software testing--Part 3:Test documentation," in ISO/IEC/IEEE 29119-3:2021(E) ,28 Oct. 2021, doi: 10.1109/IEEESTD.2021.9591577.

DEVELOPING A TEST CASE

Writing a test case based on existing samples will be relatively straight forward

- You have a reference
- Make your new test case based on the reference
- Now you know the
  - how to test
  - what are you testing

But what if you were not given a reference and you only have a low-level description

A SAMPLE LOW LEVEL REQUIREMENT

If input a is more than 10 update output c with the value of input b, else hold to the previously updated output, the initial updated output value is 0.

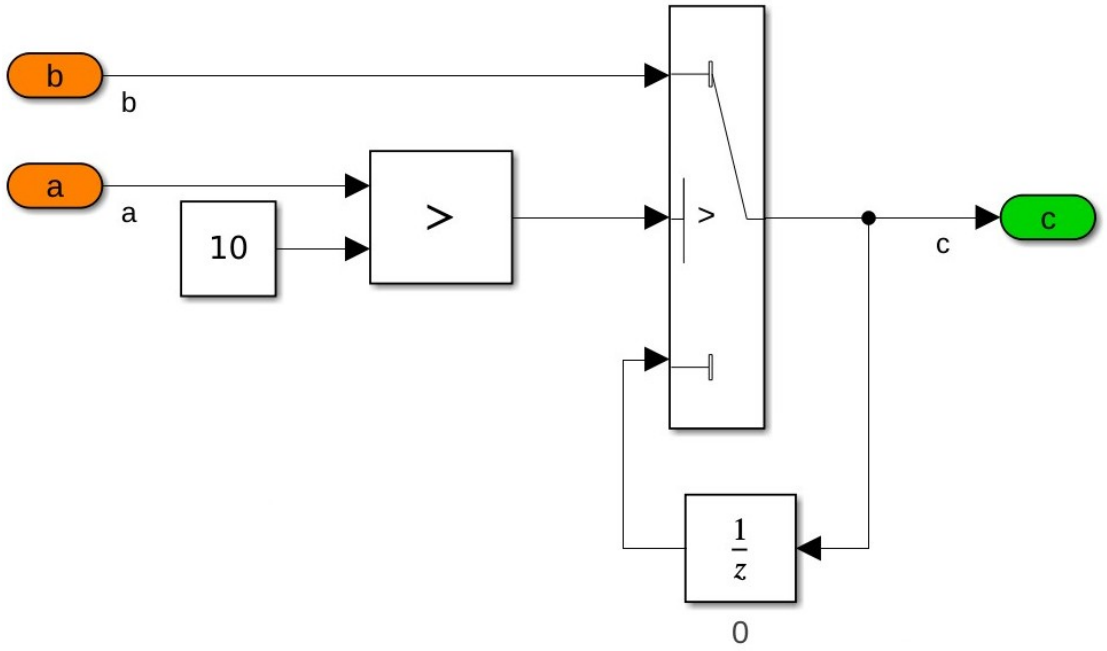

How do you write a test case for this

WHAT DO YOU WANT TO TEST FOR

- Functionality
- Coverage [for white box]
- Data coupling
- Control coupling
- Bug identification ..... and many more

Based on your target; the type of test cases change

What test case needs to be written will always depend on what you want to achieve form the testing

You can use multiple test approaches as well

- Model-based testing
- Mutation testing
- Combinatorial testing
- Path testing ..... and many more

THAT WAS JUST UNIT TESTING

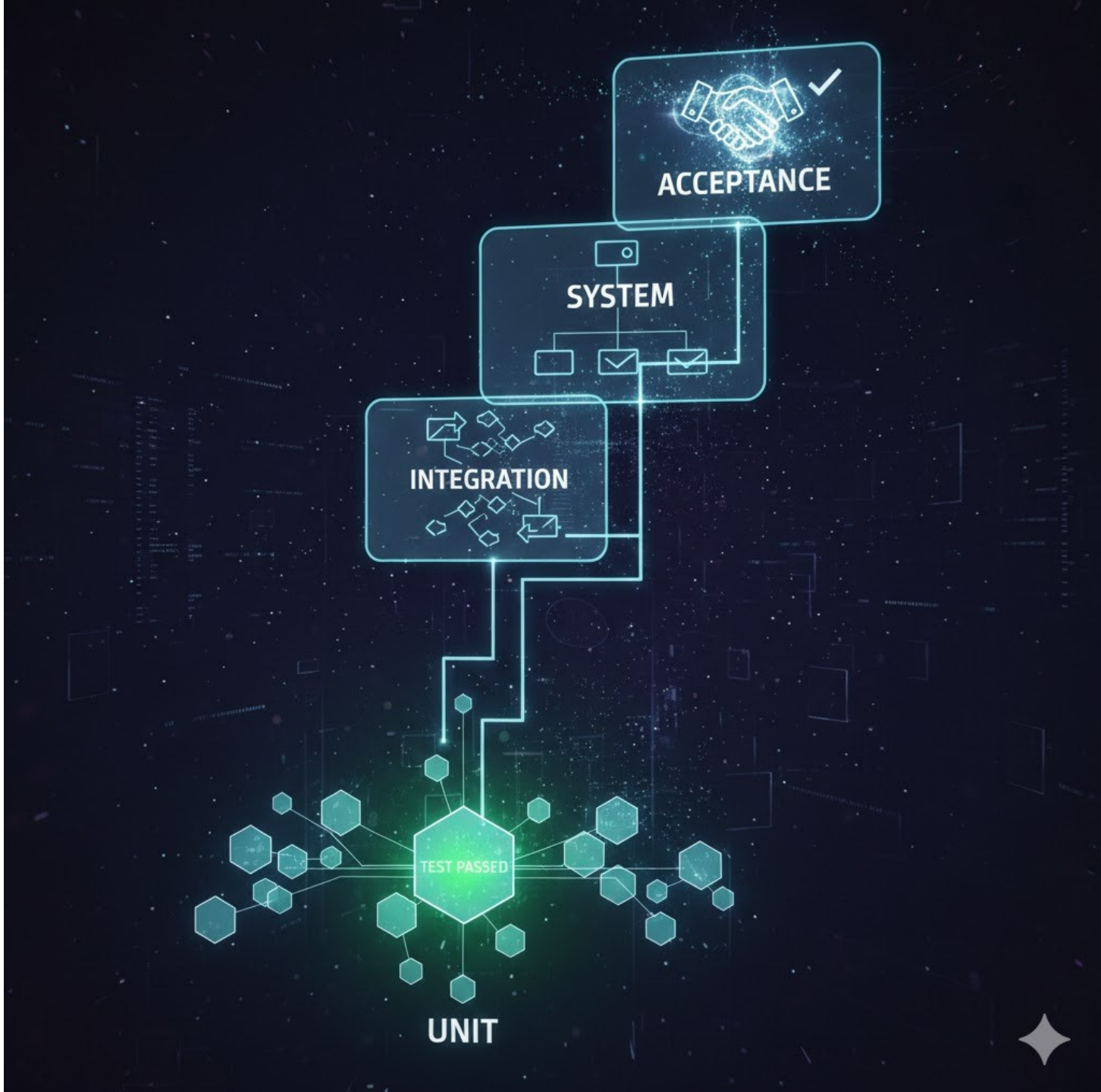

UNIT TESTING

INVOLVES

- Testing in isolation
- Different test environment than the final one
- Fast regression
- Stubbing
- Test cases only target the unit
- Coverage is local

BENEFITS

- Changes become easy to handle
- Integration becomes little simple
- Documentation
- Helps in clarifying specifications and any improvements

WRITING EFFECTIVE UNIT TESTS INVOLVE

1. Understanding Requirements
2. Complex Logic
3. Dependencies (Mocking/Stubbing)
4. State Management
5. Test Maintainability
6. Performance Overhead
7. False Positives/Negatives
8. Test Coverage
9. Testing Edge Cases
10. Maintaining Test Independence

AS THE EXPERIENCE GROWS , TESTING LEVEL ALSO INCREASES

Integration testing

System testing

Acceptance testing

INTEGRATION TESTING

Where more than one individual components (units) are tested to verify if they are correctly interacting with each other

For a system like e-commerce consider
- cart is implemented as one moule
- Payments is implemented as one module

Now if you need to finish a purchase
- cart value needs to be passed to the payment AND
- payment confirmation need to be passed back cart

Integration testing is where these exchanges are tested

```
it is not required that the test verify
if the value form cart is correct
and the payment done for the expected value
```

INTEGRATION TESTING STRATEGIES

1. Big-bang
2. Top-down
3. Bottom-up
4. Critical-first
5. Function-at-a-time
6. As-delivered
7. Sandwich

SYSTEM TESTING

Where the final system is tested if it is

- Compliance with functional requirements
- Compliance with non-functional requirements

System testing should

- Use final real environment
- Test functionality as a user and designer
- Check on performance
  - Speed
  - Latency
  - Load
- Test how failures are handled

System testing is the last place where failure could be accepted

System testing provides the confidence on the system as a whole
The environment is real and testcases are real world

ACCEPTANCE TESTING

Where the customer or end user tests the system

- Beta testing
- Crowd testing
- Compliance testing
- Field Testing

Acceptance testing validates

- Business requirements
- User workflows
- Real-world usage
- Contract conditions
- Regulatory rules

Acceptance testing is where you decide to release or not to

```
Acceptance testing is executed in non developmental perspective
Non one cares how the system is inside
Only yard stick is how well it performs
```

WHAT I LEARNT DOING TESTING

Personal experiences

RULES OF THUMB

To conduct a successful test campaign

- Decide an overall strategy
  - What level are you testing
  - What type are you testing (black box or white box)
  - What do you want to achieve
  - What is the minimum required
  - What is the maximum you want to do (*when to stop*)
  - What are must to do (for certifications , conformities etc.,)
- Create a test plan [and document it properly]
- Stick to the plan
- Log all defects
- Document all lessons learnt

QUALITIES OF A TESTER

- Independent of designing team
- Think like a user
- Have curiosity
- Lots of patience
- Good documentation skills
  - You need all the evidence to support you
- A little bit courageous

THAT’S ALL WHAT I WANT TO TALK ABOUT TESTING

Any Queries ??

CLASS ACTIVITY

Let’s put what we learnt to action

CLASS ACTIVITY 4 : TESTING

- 4 questions
- 20 marks

- NO MOBILES
- NO COMPUTERS
- NO CHEATING

GRADED ACTIVITY 4 - TESTING

ANNAPURNA the food delivery app shall calculate the final amount payable as follows.

The user provides the food order amount, the delivery distance in kilometers, whether they are a premium member, and an optional coupon code.

Delivery charges are based on distance. If the distance is up to 5 km, the delivery charge is ₹20. If the distance is more than 5 km, the delivery charge is ₹50. Premium members do not pay any delivery charge.

If the order amount is ₹500 or more, a discount of 10% is applied to the order amount. A coupon code **SAVE50** provides an additional ₹50 discount, but only when the order amount is at least ₹300. The total discount applied cannot exceed ₹100.

Identify Equivalence classes with examples for at least two inputs – 2 marks

Identify 2 ‘units’ in the requirement and write at least 3 unit level testcases for each – 6 marks

Identify at least 4 end-to-end use case scenarios – 4 marks

Write testcases in generic template for the 4 use case scenarios – 8 marks