CTEVT, DIPLOMA, QUESTION & SOLUTION

⇐ SECOND EDITION ⇒

Applied Mechanics

(For Diploma I Yrs. II Part)

Second & Third Semester

(Engineering All)

By

Arjun Chaudhary

Published in : www.arjun00.com.np

Published Poster in: www.facebook.com/arjun00.com.np

Authors **© Arjun Chaudhary**

Email:- info@arjun00.com.np

Solution_Last_Update :- **2024/09/20 1:11 AM**

****Dont Remove these page, Otherwise You Got Copyright**

****All rights reserved. It is requested that no part of our PDF be uploaded to any group & app Without my permission.**

**Download from www.arjun00.com.np

S.No	Exam Year, Month
1.	2078 Magh Regular/Back—3rd Sem
2.	2079 Falgun Regular/Back
3.	New Model Question
4.	2080 Bhadra Back—3rd Sem
5.	2080 Mangsir Regular/Back
6.	2080 Chaitra Back—3rd Sem
7.	2081 Jestha__(Special Scholarship)

** "If you find a mistake in Question/Answer, Kindly take a Screenshot and email to info@arjun00.com.np "

** "I have created this content for students' benefit, so please don't copy it or remove my logos without permission. "

**This Solution is for Educational Purpose Only. If you misuse it, we are not Responsible.

Support us

A Small gift will help maintain this website. →

Feel Free to Read at no cost.

Support us on: fonepay

you can donate as you wish.

ARJUN CHAUDHARY

2222120014283943

**Download from www.arjun00.com.np

Applied Mechanics__(Engg. All) 3rd Sem

(2078) Question Paper Solution.

Compile & Written by © Arjun Chy
Website :- www.arjun00.com.np
Facebook :-www.facebook.com/Arjun00.com.np

1. a) What do you mean by rigid and Deformed body? Explain Coplanar, Non-coplanar, like parallel and Unlike parallel Force.

- **Rigid body** is the combination of two or more particles which are so interconnected that they does not change their relative position when force is applied on it. Otherwise it is called **deformable body**.
- When all forces are acting in the same plane, they are called **coplanar** force.
- If the lines of action of forces do not lie in the same plane then the forces are called **non-coplanar** force.
- Parallel forces are those which do not meet at any point though they have same effect on the body on which they act. The parallel forces are classified as:-

Like parallel forces

- The force, whose line of action is parallel to each other and they act in the same direction.

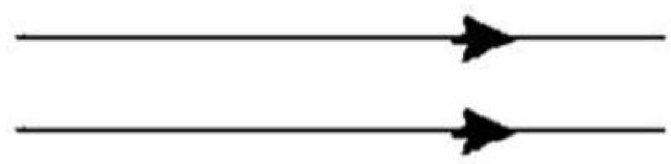

Fig: Like parallel forces

**Download from www.arjun00.com.np

Unlike parallel forces

- The force, whose line of action is parallel to each other but they act in the opposite direction.

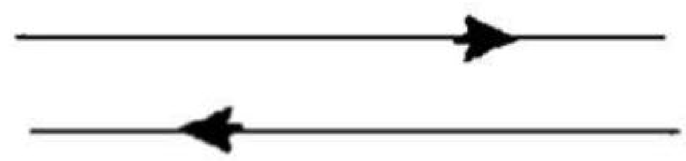

Fig: Unlike parallel forces

b) Find the magnitude and direction of the resultant force for the following force: 40kg acting at N30°E, 25kg acting at North, 50kg acting at N45°W and 60kg acting at S30°W.

- The system is shown below in the figure (i):-

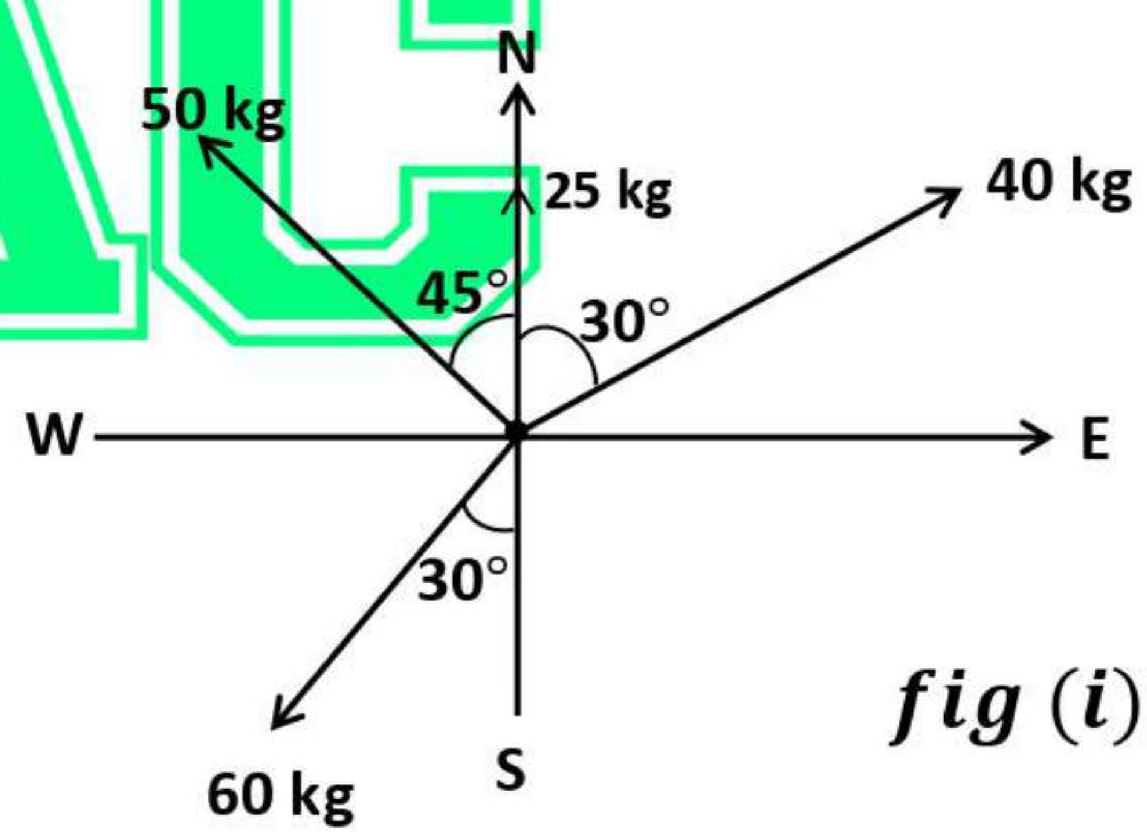

$fig\ (i)$

Now,

Resolving all the forces horizontally $i.e.$, East-West line.(x-axis)

$$\sum \mathrm{H} = 40\sin 30° - 50\sin 45° - 60\sin 30°$$
$$= 20 - 35.35 - 30$$
$$= \mathbf{-45.35}\boldsymbol{kg}$$

**Download from www.arjun00.com.np

Resolving all the forces Vertically $i.e.$, North-south line.(y-axis)

$$\sum \mathrm{V} = 25 + 40\cos 30° + 50\cos 45° - 60\cos 30°$$
$$= \mathbf{43.034}\boldsymbol{kg}$$

$As \sum \mathrm{H} = -ve\ , and \sum \mathrm{V} = +ve \quad i.e. It\ lies\ on\ 2^{nd}\ Quadrant$

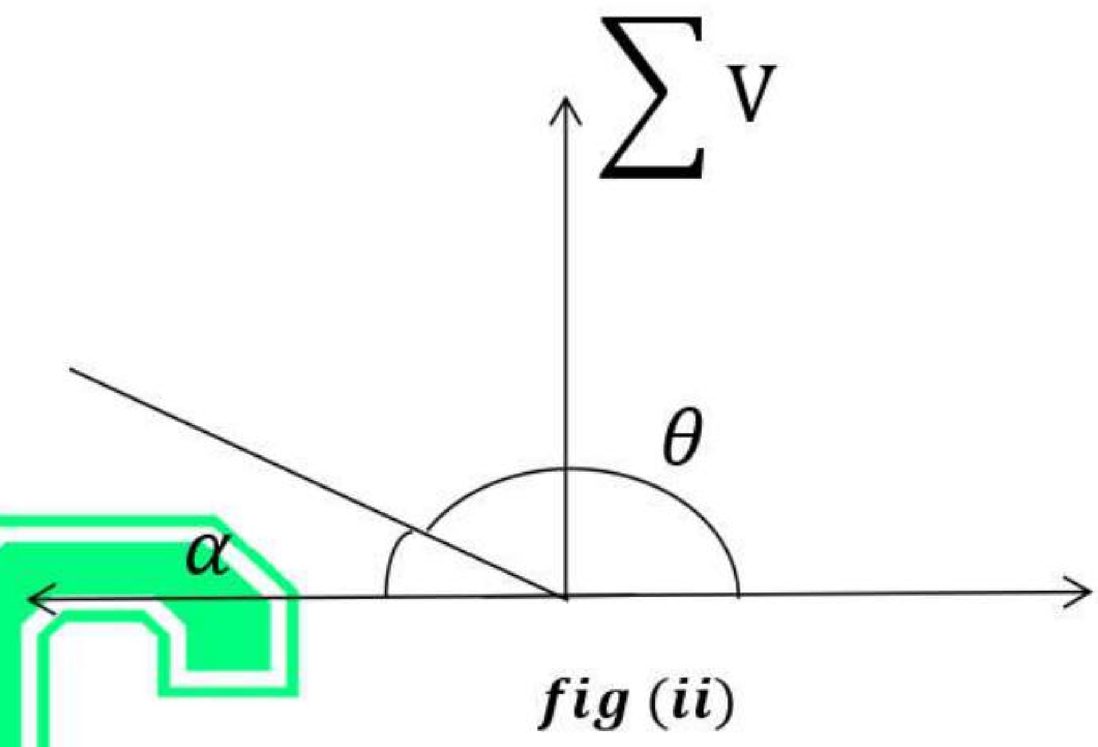

$fig\ (ii)$

Let "R" be Resultant Force That make θ angles with horizontal

$$R = \sqrt{(\sum \mathrm{H})^2 + (\sum \mathrm{V})^2}$$
$$= \sqrt{(-45.35)^2 + (43.034)^2}$$
$$= \mathbf{62.518}\ \boldsymbol{kg}$$

$$\boldsymbol{\alpha = tan^{-1}}\left(\frac{\sum \mathrm{V}}{\sum \mathrm{H}}\right) = \boldsymbol{tan^{-1}}\left(\frac{43.034}{-45.35}\right) = \mathbf{-43.49°}$$

$$\boldsymbol{actual\ \theta = 180 - 43.49 = 136.50°} \quad [\boldsymbol{from\ fig\ (ii)}]$$

**Download from www.arjun00.com.np

2. a) State and prove Lami's Theorem.

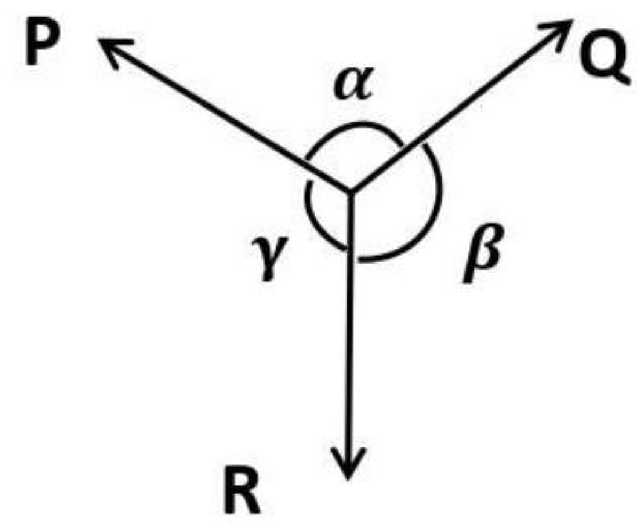

- **Statement**

"If three coplanar forces acting at a point be in equilibrium, then each force is proportional to the sine of the angle between the other two."

Mathematically;

$$\frac{P}{\sin\beta} = \frac{Q}{\sin\gamma} = \frac{R}{\sin\alpha}$$

where, P, Q and R are three forces and β, γ, α are angles as shown in the figure.

Proof

Let us consider three coplanar forces P, Q and R. Let the opposite angles of the three forces be β, γ and α respectively as in the figure.

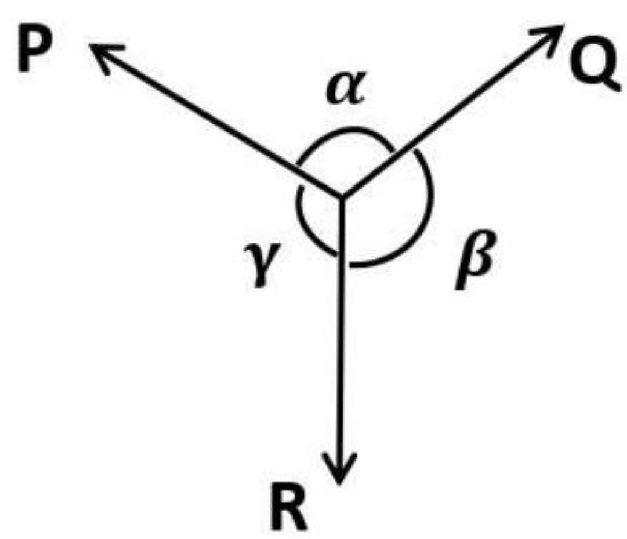

Forming triangle with these forces,

**Download from www.arjun00.com.np

Let angle between Q & R force are 'β' $i.e.$, ∠QOM = 'β'

, angle between P & Q forces are 'α ' $i.e.$, ∠PNO = 'α'

, angle between P & R forces are 'γ' $i.e.$, ∠RMN = 'γ'

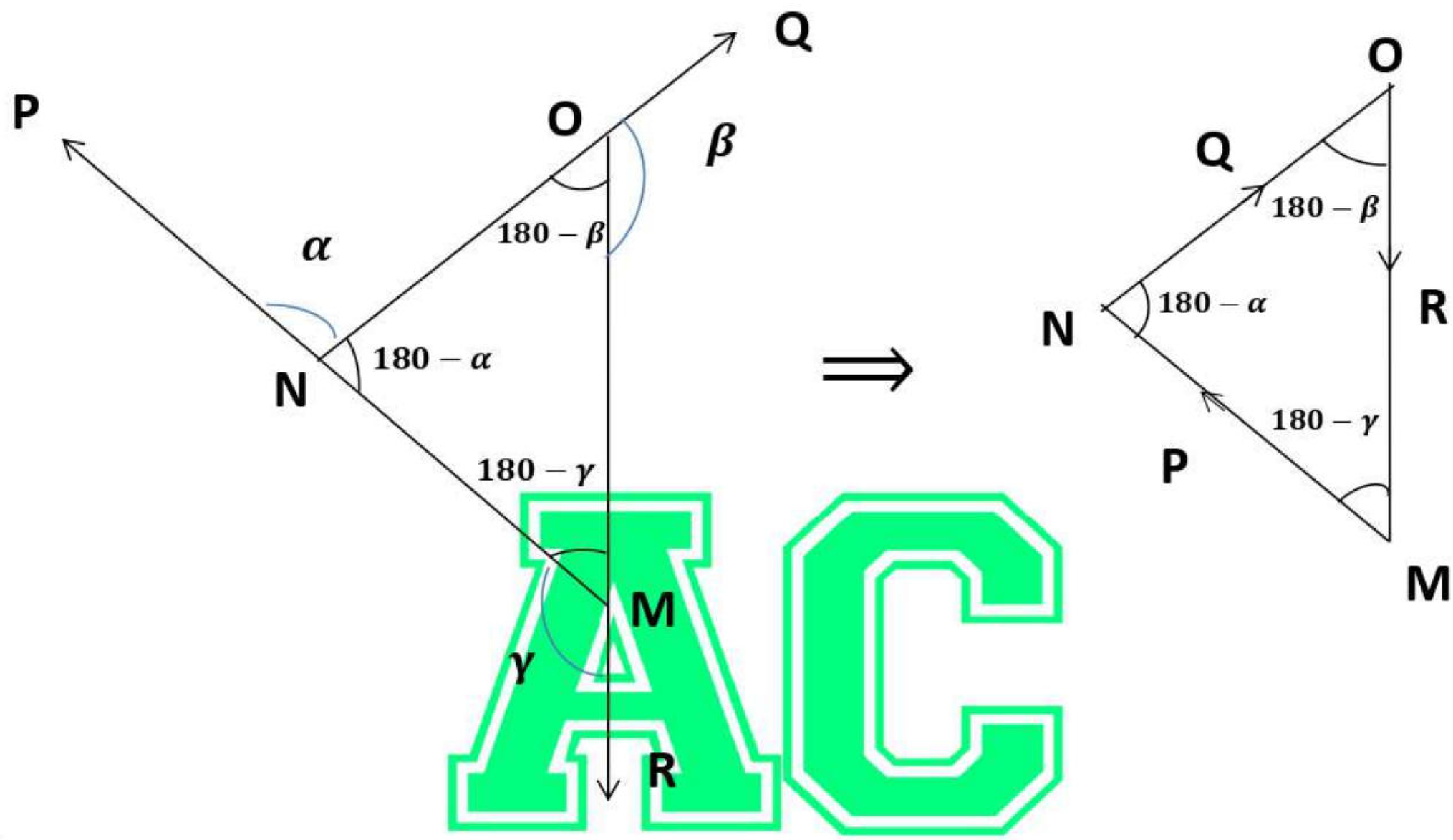

Now,

∠MON = 180 −∠PNO , ∠NMO = 180 −∠RMN , ∠MON = 180 −∠QOM

= 180 − α = 180 − γ = 180 − β

Using Sine law in Δ MON

$$\frac{P}{\sin(\angle MON)} = \frac{Q}{\sin(\angle NMO)} = \frac{R}{\sin(\angle MNO)}$$

$$\frac{P}{\sin(180 - \beta)} = \frac{Q}{\sin(180 - \gamma)} = \frac{R}{\sin(180 - \alpha)}$$

$$\frac{\mathbf{P}}{\sin \boldsymbol{\beta}} = \frac{\mathbf{Q}}{\sin \boldsymbol{\gamma}} = \frac{\mathbf{R}}{\sin \boldsymbol{\alpha}}$$

Proved.

**Download from www.arjun00.com.np

b) Find the force in the cable XY and YZ as shown in figure.

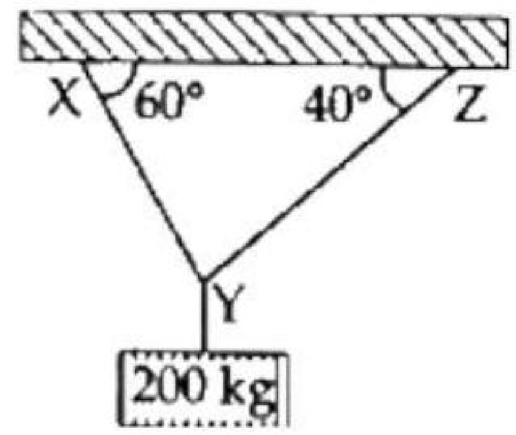

➢ Solution :

The free body diagram of the given figure is as;

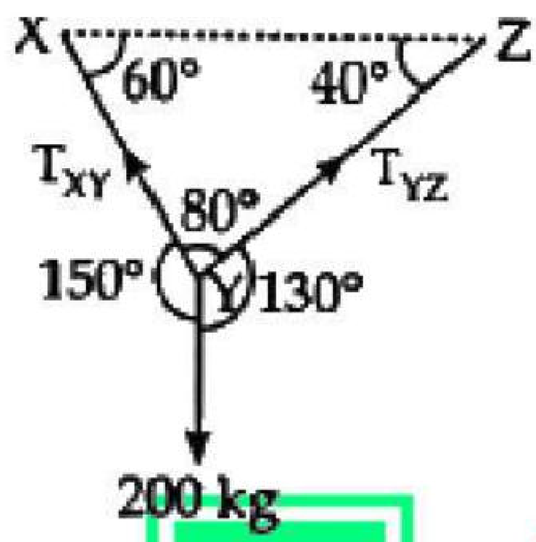

The remaining angles at point are determined by geometrically.

Now,

Let, T_{XY} = Tension in XY cable

T_{YZ} = Tension in YZ cable

Using Lami's theorem; we get,

$$\frac{T_{XY}}{\sin 130°} = \frac{T_{YZ}}{\sin 150°} = \frac{200}{\sin 80°}$$

Taking first and last expression; we get,

$$T_{XY} = \frac{200}{\sin 80°} \times \sin 130°$$

$$\therefore \quad \mathbf{T_{XY} = 155.572\ kg}$$

Similarly;

$$T_{YZ} = \frac{200}{\sin 80°} \times \sin 150°$$

$$\therefore \quad \mathbf{T_{YZ} = 101.543\ kg}$$

**Download from www.arjun00.com.np

3. a) Define the terms friction and angle of friction. And also show the sliding and Tripling condition of the body with sketch.

- When a body slides over another body, a force is exerted a surface of contact by the stationary body on a moving body. The resisting force is called the force of friction and acts in the direction opposite to the direction of motion.
- Angle of friction (ϕ) is defined as the angle which the resultant of normal reaction and limiting frictional force makes with the normal reaction.

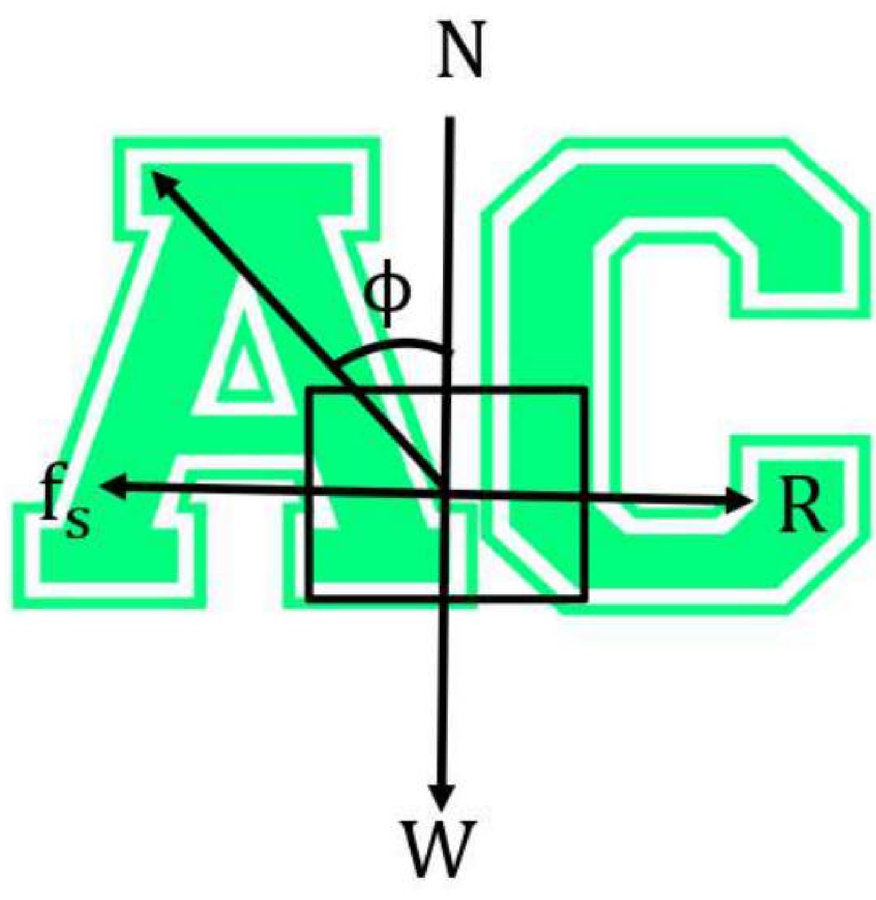

- **The sliding and Tripling condition of the body with sketch**

**Download from www.arjun00.com.np

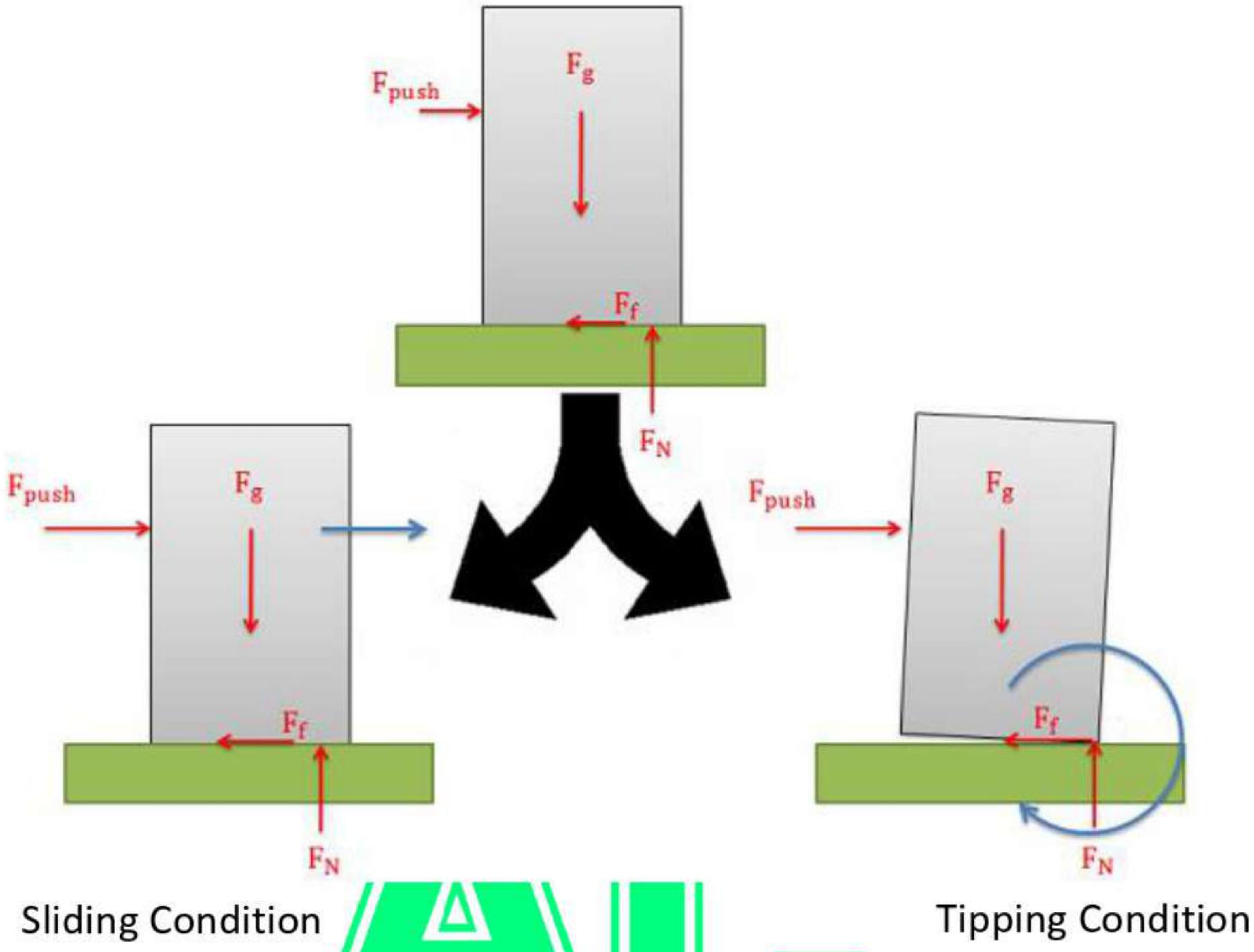

➢ The sliding condition of the body with sketch

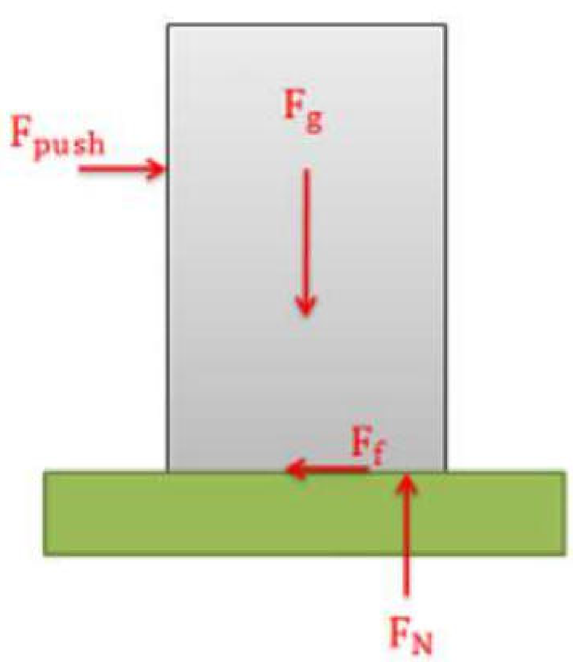

$$F_{f(max)} = \mu_s * F_N$$

If

$$F_{push} > F_{f(max)}$$

If Applied (push) force is greater than Friction force then, body will slide i.e no tipping

**Download from www.arjun00.com.np

➢ Tripling condition of the body with sketch

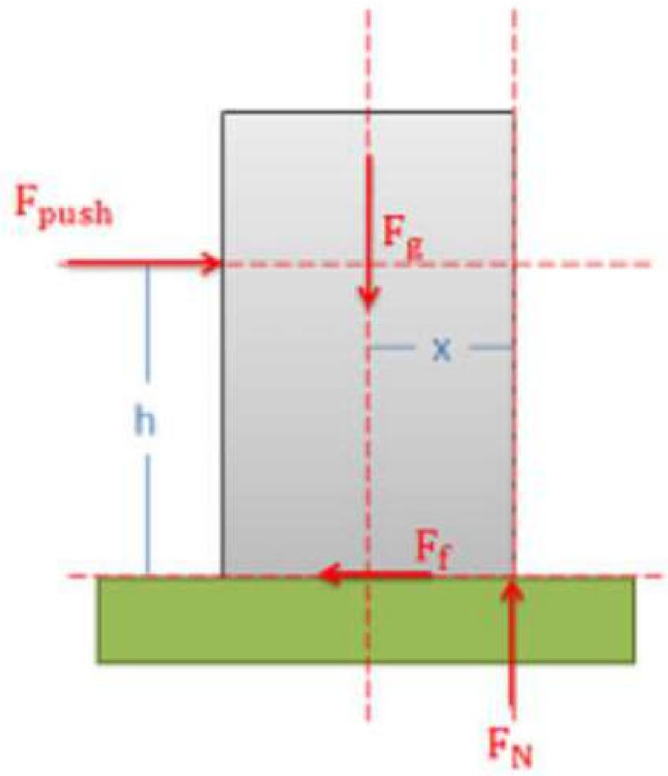

$$M_{g/N} = F_g * x$$
$$M_{push/f} = F_{push} * h$$

If

$$M_{push/f} > M_{g/N}$$

Then the box will begin to tip over

If Moment due to push force is greater than Moment due to Weight of block such that Moment taken at Edge B then, body will begin to Tip

OR,

➢ Derivation of Condition of Tipping and sliding of a block

Here tipping refers to the turning of block ABCD due to the formation of couple. The condition for no tipping is $h = \frac{a}{2\mu_s}$

or, $h < \frac{a}{2\mu_s}$ $\quad$ $i.e.\ h \leq \frac{a}{2\mu_s}$

h is point of application of force P above the base of block AB.

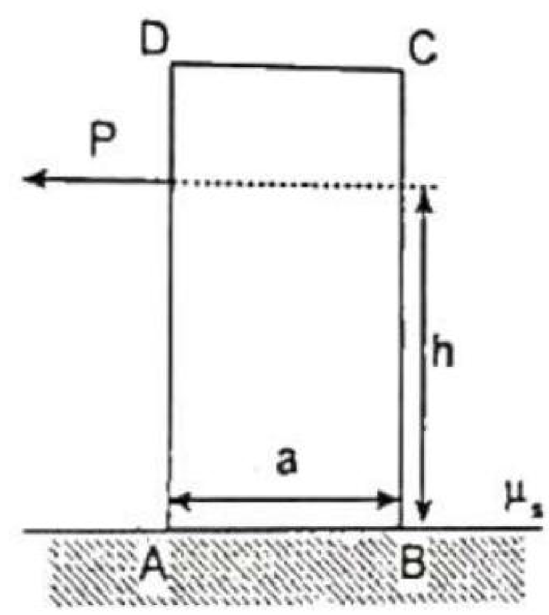

Proof:

At extreme point of tipping i.e. at just tipping condition, the block will be in equilibrium and reaction R will be at Point A.

So, at equilibrium

**Download from www.arjun00.com.np

i) $\sum M_A = 0$ ↻ + ve

$$mg\frac{a}{2} - P.h = 0$$

$$P.h = mg\frac{a}{2}$$

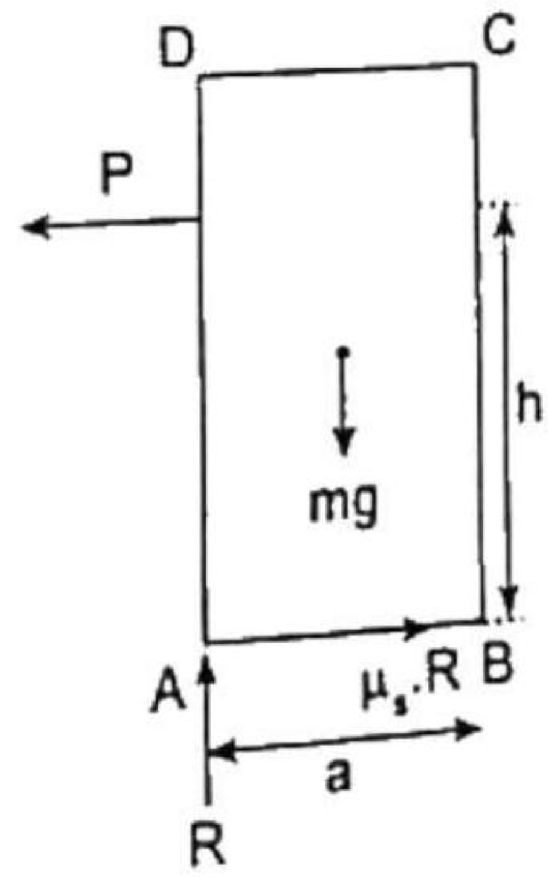

ii) $\sum F_X = 0 \rightarrow +ve$

$$\mu_s.R - P = 0$$

$$\therefore P = \mu_s.R$$

iii) $\sum F_y = 0 \uparrow +ve$

$$R - mg = 0$$

$$R = mg$$

Combining all three equation above

$$\mu_s.R.h = R.\frac{a}{2}$$

$$h = \frac{a}{2\mu_s}$$

So, for no tipping $h \leq \frac{a}{2\mu_s}$. **Proved.**

b) A load of 50N is lying on inclined plane whose inclination with the horizontal is 30°. If the coefficient of friction between load plane is 0.4. Find the maximum and minimum horizontal force which will keep the load in equilibrium.

- **For maximum Horizontal Force $i.e.$, Body Sliding Up Motion**

**Download from www.arjun00.com.np

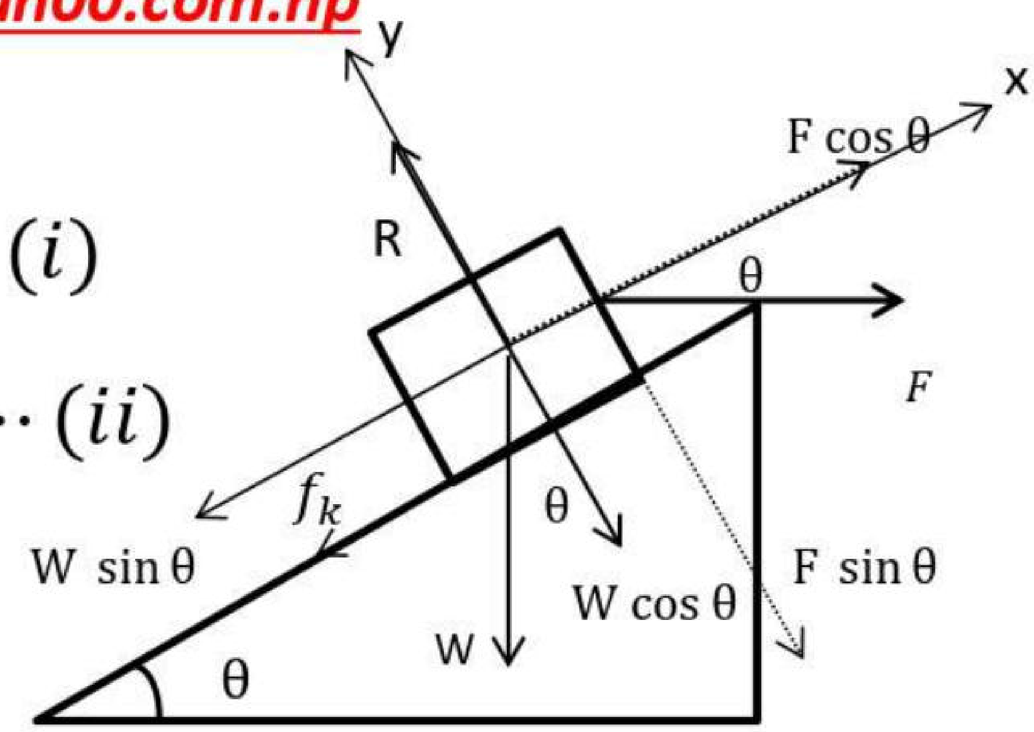

$\nwarrow \sum f_y = 0;\ \mathrm{R} = \mathrm{W}\cos\theta + \mathrm{F}\ \sin\theta \cdots\cdots (i)$

$\swarrow \sum f_x = 0;\ \ \mathrm{W}\ \sin\theta + \mathrm{f_k} = \mathrm{F}\cos\theta \cdots\cdots (ii)$

Using equations (i) on eqn (ii),we get

$$\mathrm{W}\sin\theta + \mu_k(\mathrm{W}\cos\theta + \mathrm{F}\ \sin\theta) = \mathrm{F}\cos\theta \qquad [\because\ \mathrm{f_k} = \mu_k\ \mathrm{R}\,]$$

$$\mathrm{W}(\sin\theta + \mu_k\cos\theta) = \mathrm{F}(\cos\theta - \mu_k\ \sin\theta)$$

$$\therefore \mathrm{F} = \frac{\mathrm{W}(\sin\theta + \mu_k\cos\theta)}{(\cos\theta - \mu_k\ \sin\theta)}$$

$$= \frac{50(\sin 30° + 0.4\cos 30°)}{(\cos 30° - 0.4\ \sin 30°)}$$

$$\therefore \mathrm{F_{max}} = 63.54\mathrm{N}$$

AC

➢For minimum Horizontal Force $i.e.$, Body Sliding Down Motion

At Equilibrium,

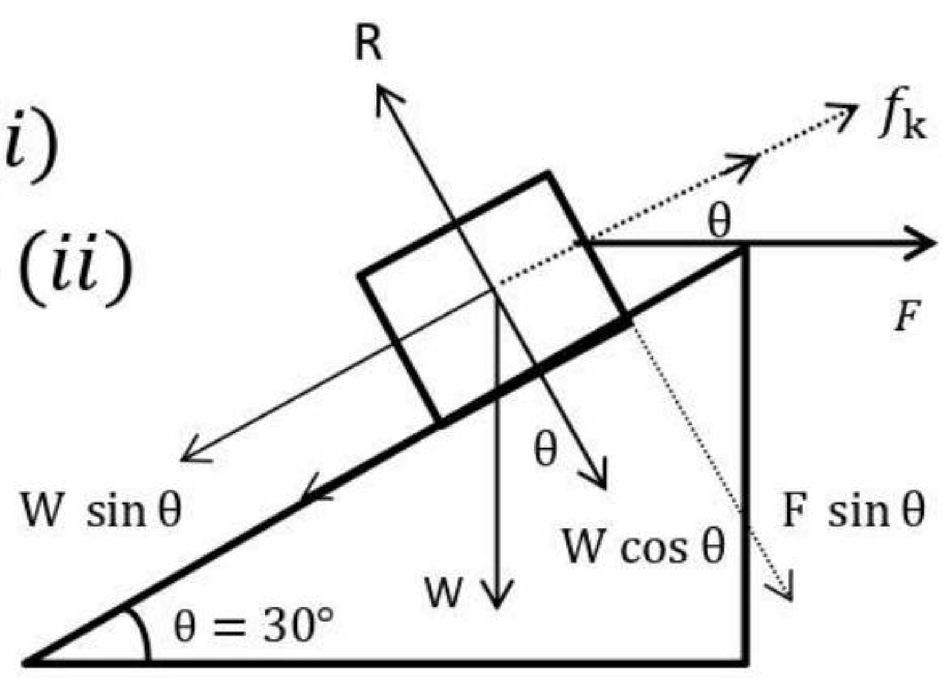

$\nwarrow \sum f_y = 0;\ \ \mathrm{R} = \mathrm{W}\cos\theta + \mathrm{F}\ \sin\theta \cdots\cdots (i)$

$\swarrow \sum f_x = 0;\ \ \mathrm{W}\ \sin\theta\ =\ \mathrm{f_k} + \mathrm{F}\cos\theta\ \cdots\cdots (ii)$

Using equations (i) on eqn (ii),we get

$[\because\ \mathrm{f_k} = \mu_k\ \mathrm{R}\,]$

**Download from www.arjun00.com.np

$$W \sin\theta = \mu_k(F \sin\theta + W\cos\theta) + F\cos\theta$$

$$W\,[\sin\theta - \mu_k\,(\cos\theta)] = F(\mu_k\,\sin\theta + \cos\theta)$$

$$\therefore F = \frac{W(\sin\theta - \mu_k\cos\theta)}{(\mu_k\,\sin\theta + \cos\theta)}$$

$$= \frac{50(\sin 30° - 0.4\cos 30°)}{(0.4\,\sin 30° + \cos 30°)}$$

$$\therefore F_{min} = 7.2N$$

4. a) Define centroid and find the relation for centroid for rectangle.

- The centroid or centre of area is defined as the point where the whole area of the figure is assumed to be concentrated. It is analogous to centre of gravity when a body has area but not weight.

➔ Consider a rectangle ABCD of breadth b and height h. Consider strip of thickness dy located at a distance of y as shown.

Elemental area $dA = b\,dy$

Moment about x-axis $dM_X = y\,dA$

$= by\,dy$

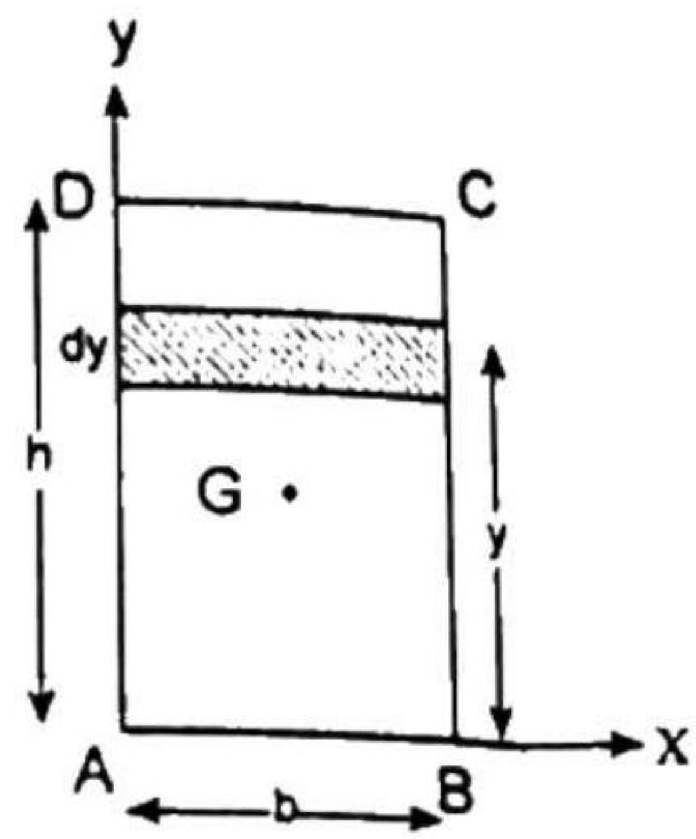

Area of rectangle $A = b \times h$

Let $\bar{Y}$ be the distance of centroid from x- axis.

Then from moment principle:

$$A \times \bar{y} = \int d\,M_X$$

**Download from www.arjun00.com.np

$$bh \times \bar{y} = \int_0^h by\ dy = b = \frac{y^2}{2}\Big|_0^h = \frac{b}{2}.h^2\frac{1}{bh}$$

$$\therefore \bar{y} = \frac{h}{2}$$

$$Similarly, \qquad \bar{x} = \frac{b}{2}$$

$$\therefore (\bar{x}, \bar{y}) = \left(\frac{b}{2}, \frac{h}{2}\right)$$

b) Find the MOI of the given section about centroidal axis parallel to the x-x axis.

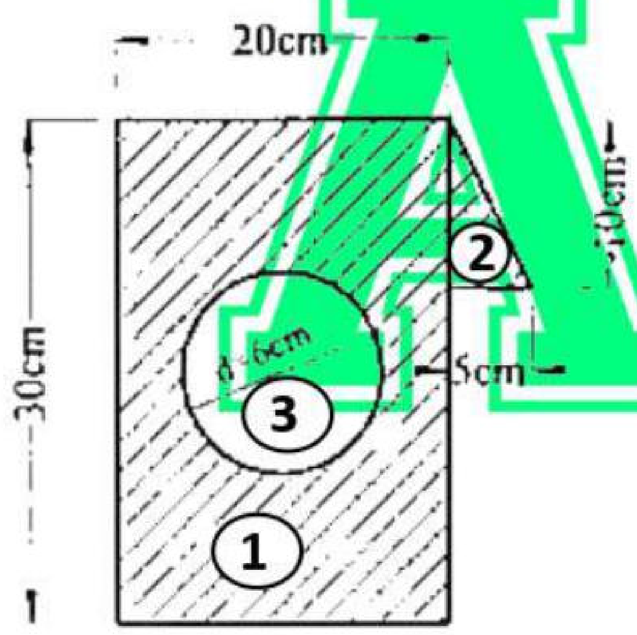

Fig	$\bar{X}$	$\bar{Y}$	Area
1(+ve)	$\frac{20}{2} = 10$ cm	$\frac{30}{2} = 15$ cm	$30 \times 20 = 600\text{cm}^2$
2(+ve)	$20 + \frac{5}{3} = 21.67\text{cm}$	$20 + \frac{10}{3} = 23.33$ cm	$\frac{1}{2} \times 5 \times 10 = 25\text{cm}^2$
3(-ve)	10cm	15cm	$\pi(3)^2 = 28.27\text{cm}^2$

$$\bar{X} = \frac{\sum AX}{\sum A} = \frac{A_1X_1 + A_2X_2 - A_3X_3}{A_1 + A_2 - A_3}$$

**Download from www.arjun00.com.np

$$= \frac{600 \times 10 + 25 \times 21.67 - 28.27 \times 10}{600 + 25 - 28.27}$$

$$\bar{\mathbf{X}} = 10.489 \text{ cm}$$

Now,

$$\bar{\mathbf{Y}} = \frac{\sum AY}{\sum A} = \frac{A_1Y_1 + A_2Y_2 - A_3Y_3}{A_1 + A_2 - A_3}$$

$$= \frac{600 \times 15 + 25 \times 23.33 - 28.27 \times 15}{600 + 25 - 28.27}$$

$$\bar{\mathbf{Y}} = 15.348 \text{ cm}$$

MOI about Centroidal X-axis,

$$I_{CX-CX} = \left[\frac{bh^3}{12} + A_1\left(\bar{Y} - Y_1\right)^2\right] + \left[\frac{bh^3}{36} + A_2\left(\bar{Y} - Y_2\right)^2\right] - \left[\frac{\pi r^4}{4} + A_3\left(\bar{Y} - Y_3\right)^2\right]$$

$$= \left[\frac{20 \times 30^3}{12} + 600 \times (15.348 - 15)^2\right] + \left[\frac{5 \times 10^3}{36} + 25(15.348 - 23.33)^2\right] - \left[\frac{\pi \times 3^4}{4} + 28.27(15.348 - 15)^2\right]$$

$$= 45072.662 + 1719.746 - 67.040$$

$$I_{CX-CX} = 46725.368 \text{cm}^4$$

**Download from www.arjun00.com.np

5. a) What do you mean by statically determinate structure? What are the different types of beam?

- A statically determinate beam is one for which the reactions and internal stresses Developed in the plane member **can be completely be determined** by using the equation of static equilibrium. i.e. ∑H=0, ∑V=0and ∑M= 0.For example; simply supported beams, cantilever beams, three hinged arches, etc.

- **The different types of beam are:-**

  - **Cantilever beam:-** A cantilever is a beam whose one end is fixed and the other end is free. AB is the length of cantilever.

  - **Simply supported beam:-** A beam which rests as one hinge support and other roller support.

  - **Over handing beam:-** An overhanging beam is one or both the ends projects beyond the support.

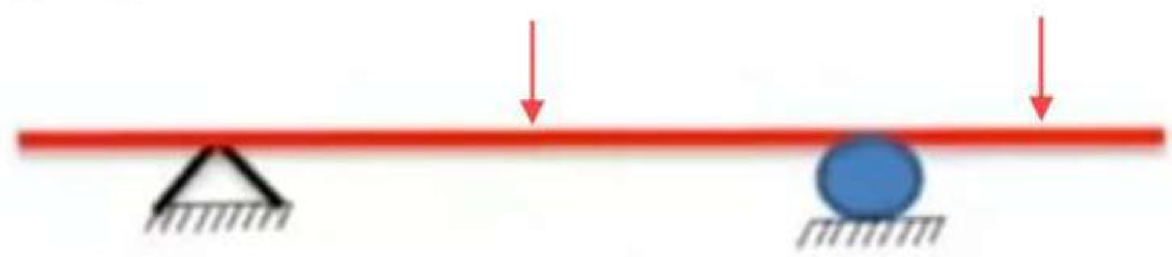

  - **Fixed beam:-** A beam whose both ends are rigidly fixed or built into its supporting walls and columns.

  - **Continuous beam:-** This have more than two supports.

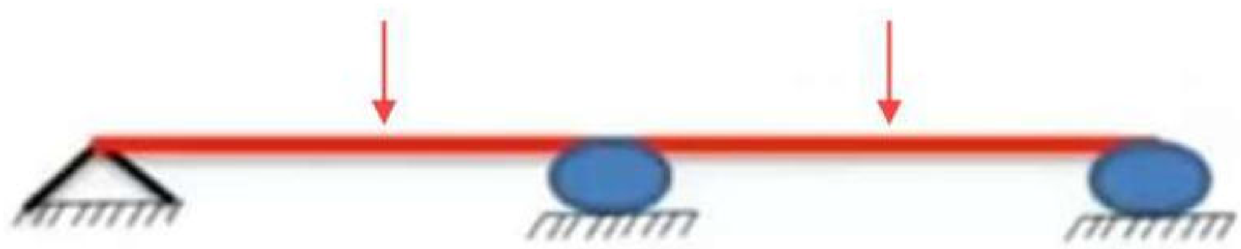

.

**Download from www.arjun00.com.np

b) Discuss about the method of analysis of truss.

- They are two method of analysis of truss are:-

a) Method of joints

- The solution proceeds from one joint to the other. At every joint the forces are concurrent as the centre line of each member at a joint meet at a point. Equation of equilibrium at a joint is

$$\sum F_x = 0; \qquad \sum F_y = 0;$$

Thus only two unknown forces can be determined. So we need to start with a joint with two unknown force at most.

b) Method of sections

- This method is more economical than the method of joints, if forces in only few members of the truss are desired. Divide the truss into two imaginary section by passing a cut (straight or crooked) through the truss such that the member in which force is to be determined is cut. To solve problem more than one cut may be required. Take one cut section of truss and use

$$\sum M = 0; \qquad \sum F_y = 0; \qquad \sum F_x = 0;$$

to solve the unknown forces.

The section has to be such that it does not cut more than three members in which the forces are to be determined.

**Download from www.arjun00.com.np

c) A simply supported beam of 5m span carries of the UDL load of 10KN/m from left side of the beam to the center and 5KN each at 1m and 2m from the left and right hand support respectively. Find the support reaction.

- By Question,

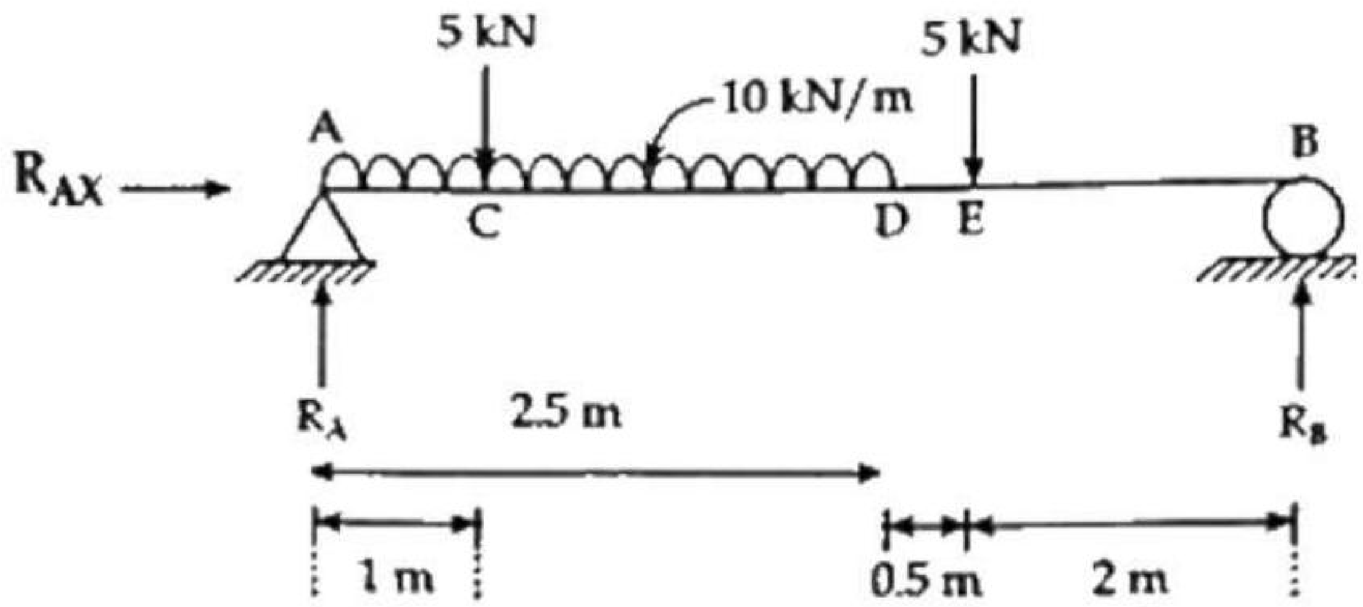

- Let R_A and R_B be the reactions at support A and B respectively. Let, R_{AX} be the horizontal reaction at support A.

$$\sum R_X = 0$$

$$\therefore R_{AX} = 0$$

Taking moment at B and equating the same; we get,

$$(+\circlearrowleft) \sum M_B = 0$$

or, $R_A \times 5 - \left\{5 \times 2 + 5 \times 4 + 10 \times 2.5 \times \left(2.5 + \frac{2.5}{2}\right)\right\} = 0$

or, $R_A = \frac{123.75}{5}$

$\therefore R_A = 24.75 \text{ kN } (\uparrow)$

and $(\uparrow +ve) \sum F_y = 0$

or, $R_A + R_B - (5 + 5 + 10 \times 2.5) = 0$

or, $R_B = 35 - 24.75$

$\therefore R_B = 10.25 \text{ kN } (\uparrow)$

**Download from www.arjun00.com.np

6. a) Find the member force of the given truss.

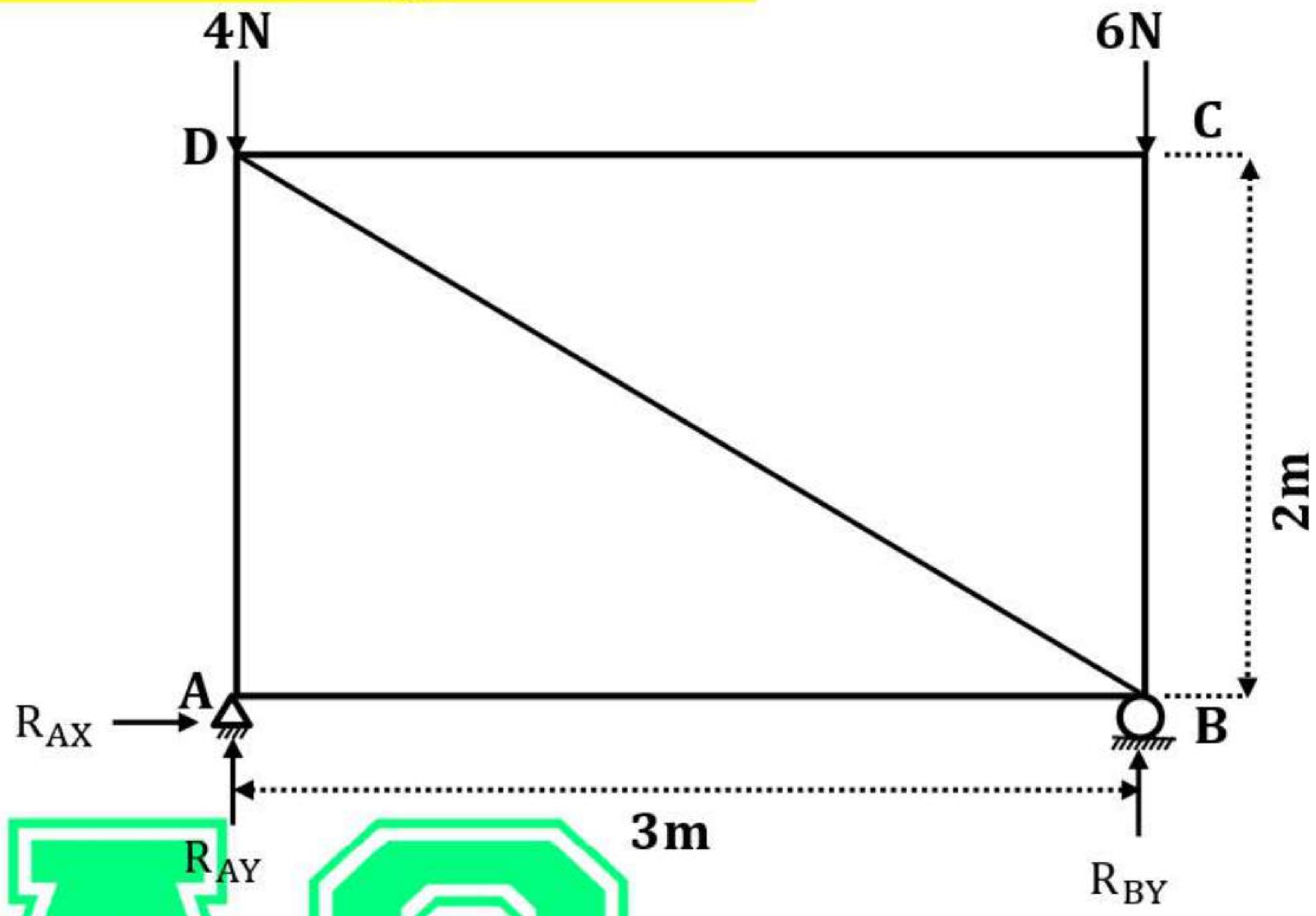

➢ Calculation of Support Reaction:

Let R_{AX} & R_{AY} be the horizontal reactions & Vertical reactions at support A. Let, R_{BY} be the reaction at support B.

$$(\rightarrow) + ve \sum F_X = 0$$

$$\therefore R_{AX} = 0$$

Taking moment at A and equating the same; we get,

$$(+\circlearrowleft) \sum M_A = 0$$

$$R_{BY} \times 3 - 6 \times 3 = 0$$

$$R_{BY} = \frac{6 \times 3}{3}$$

$$\therefore R_{BY} = 6\ N\ (\uparrow)$$

**Download from www.arjun00.com.np

$$(\uparrow) + ve \sum F_Y = 0$$

$$R_{AY} + R_{BY} - 4 - 6 = 0$$

$$R_{AY} + 6 - 4 - 6 = 0$$

$$\therefore R_{BY} = 4\ N\ (\uparrow)$$

$$\tan\theta = \frac{2}{3}$$

$$\theta = \tan^{-1}\left(\frac{2}{3}\right)$$

$$\theta = 33.69°$$

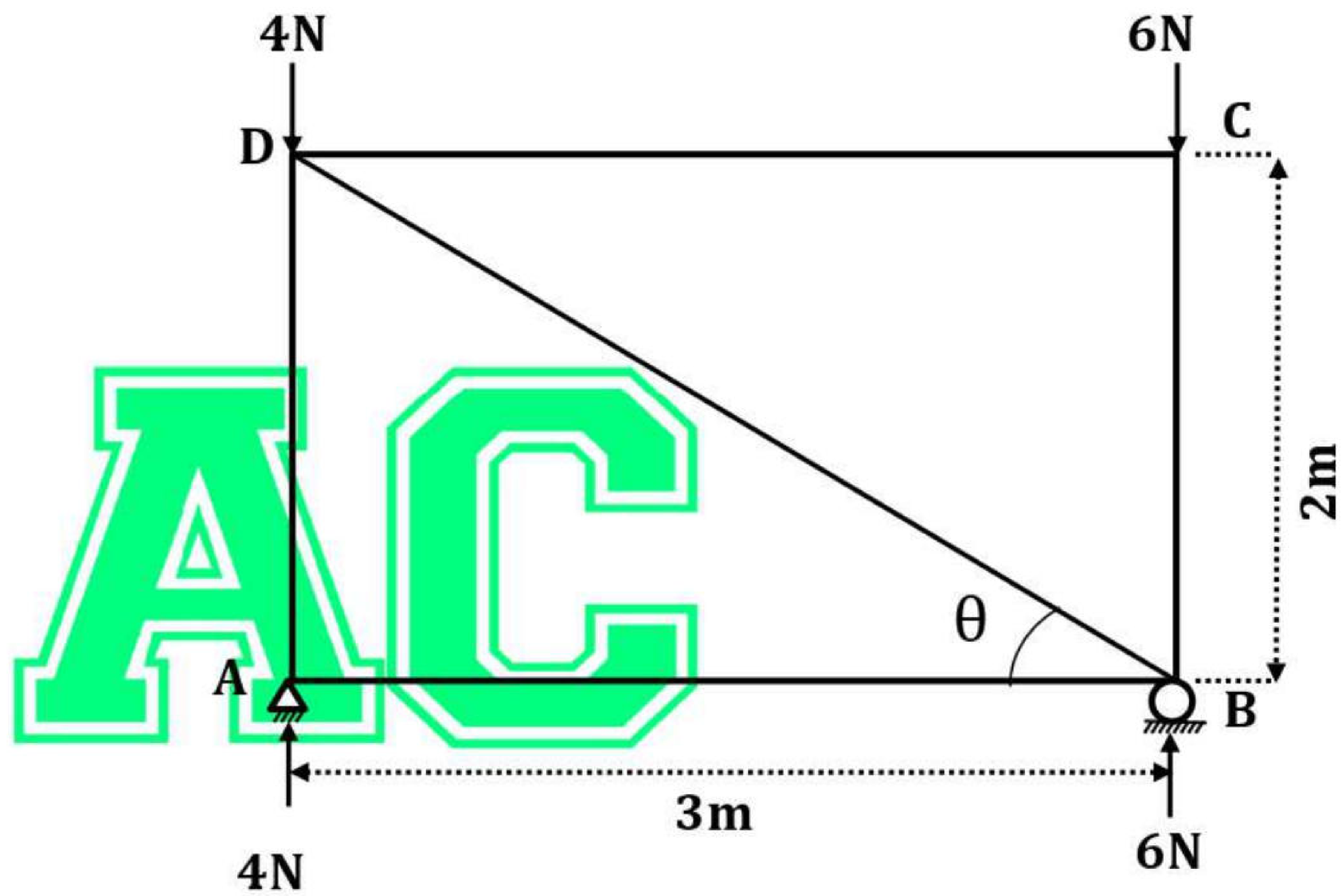

➢ Analysis Using Method of Joints:

<u>At Joint A</u>

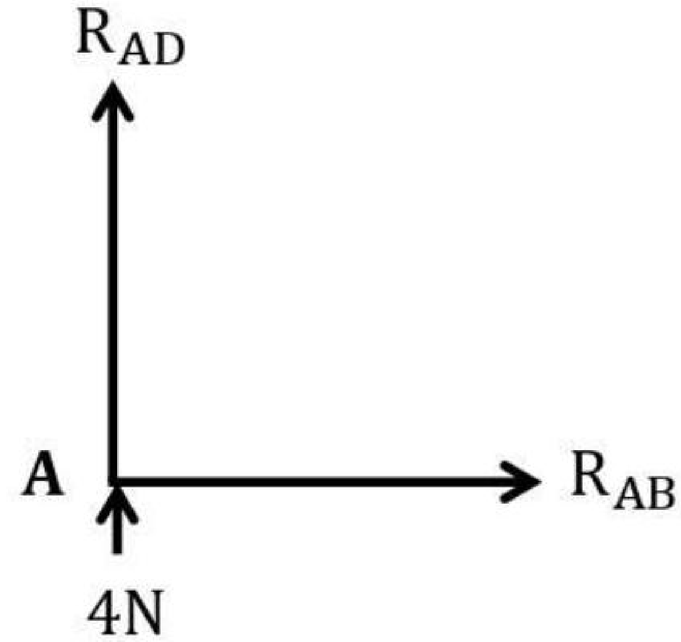

$$(\rightarrow) + ve \sum F_X = 0$$

$$\therefore R_{AB} = 0$$

$$(\uparrow) + ve \sum F_Y = 0$$

$$R_{AD} + 4 = 0 \quad \Longrightarrow R_{AD} = -4\ N$$

**Download from www.arjun00.com.np

At Joint B

$(\rightarrow) + ve \sum F_X = 0$

$R_{BA} + R_{BD}\text{Cos}\theta = 0$

$0 + R_{BD}\text{Cos}\theta = 0$

$\Longrightarrow\ R_{BD} = 0\ \text{N}$

$(\uparrow) + ve \sum F_Y = 0$

$R_{BC} + 6 + R_{BD}\text{Sin}\theta = 0$

$R_{BC} + 6 + 0.\text{Sin}\theta = 0$

$\Longrightarrow\ R_{BC} = -6\ \text{N}$

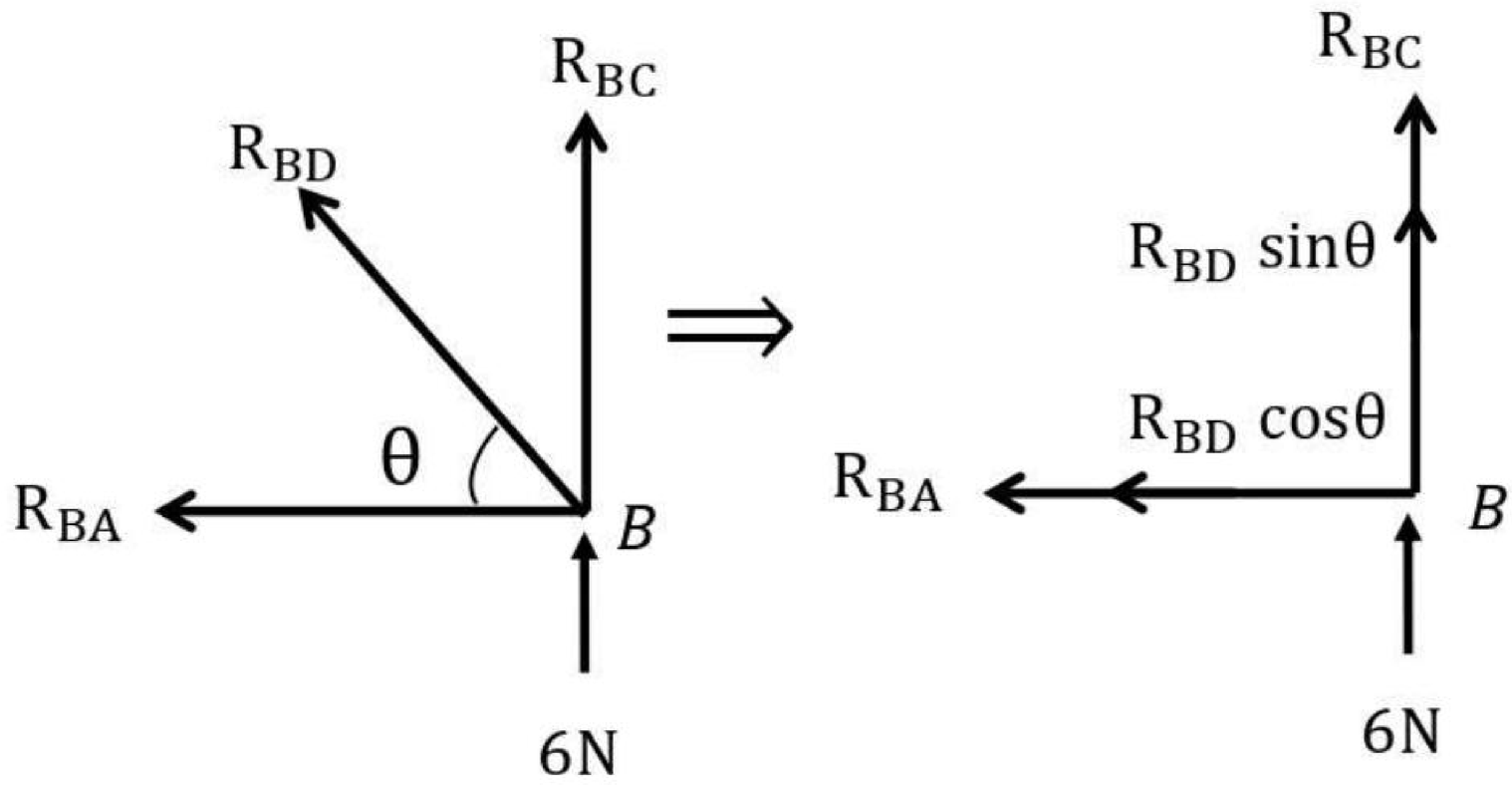

At Joint C

$(\rightarrow) + ve \sum F_X = 0$

$-R_{CB} = 0 \Longrightarrow R_{CB} = 0\ \text{N}$

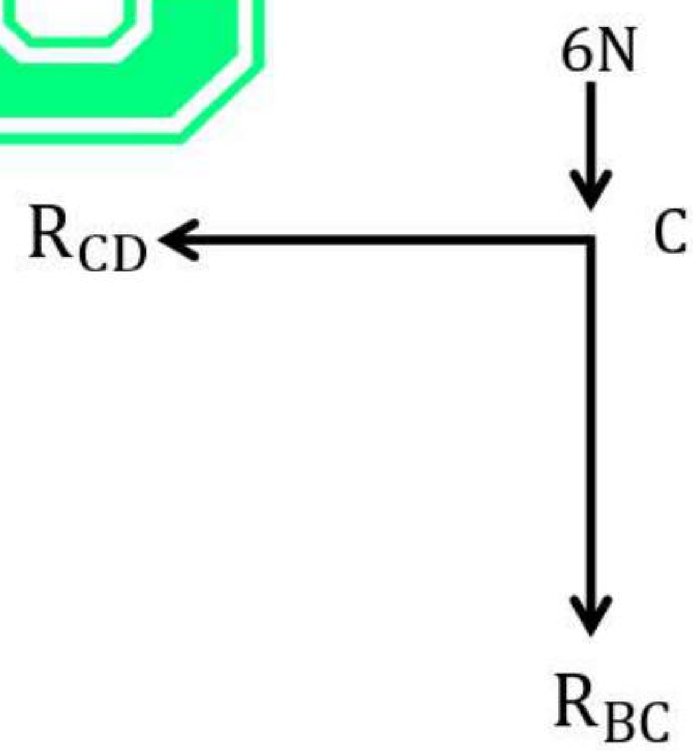

For Checking:

$(\uparrow) + ve \sum F_Y = 0$

$-R_{BC} - 6 = 0$

$\Longrightarrow\ \mathbf{R_{BC} = -6\ N}$ **(checked)**

**Download from www.arjun00.com.np

Hence,

Member	AB	BC	CD	BD	AD
Member Force(N)	0	6 (C)	0	0	4 (C)

Where, (**C**) indicate the nature of force is **compressive**

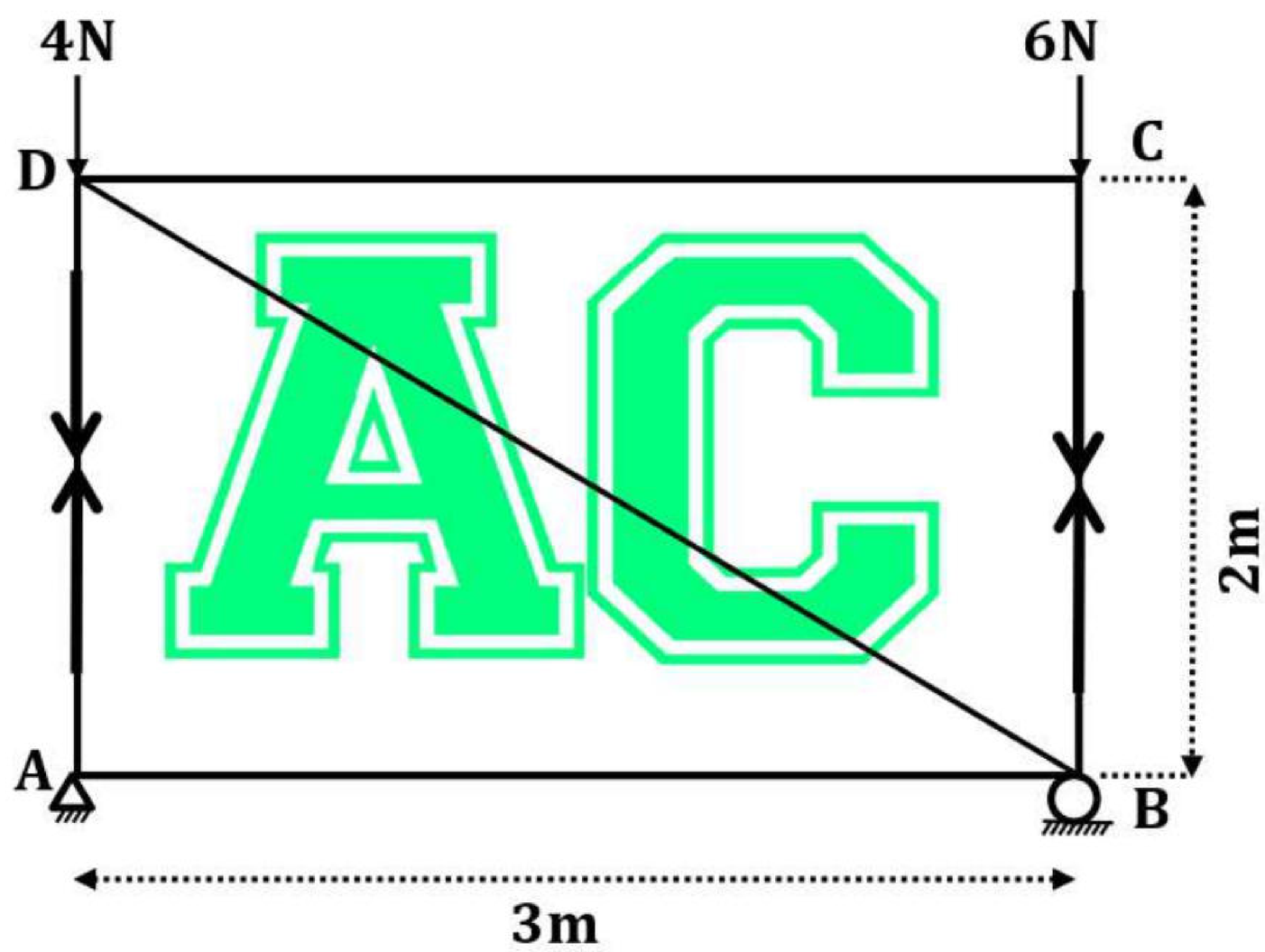

b) Write Short notes on: (Any Two)

i) Triangle Law of Forces

- It states that, "If two forces acting simultaneously on a particle be represented in magnitude and direction by the two sides of a triangle, taken in order then their resultant may be represented in magnitude and direction by the third side of the triangle, taken in opposite order."

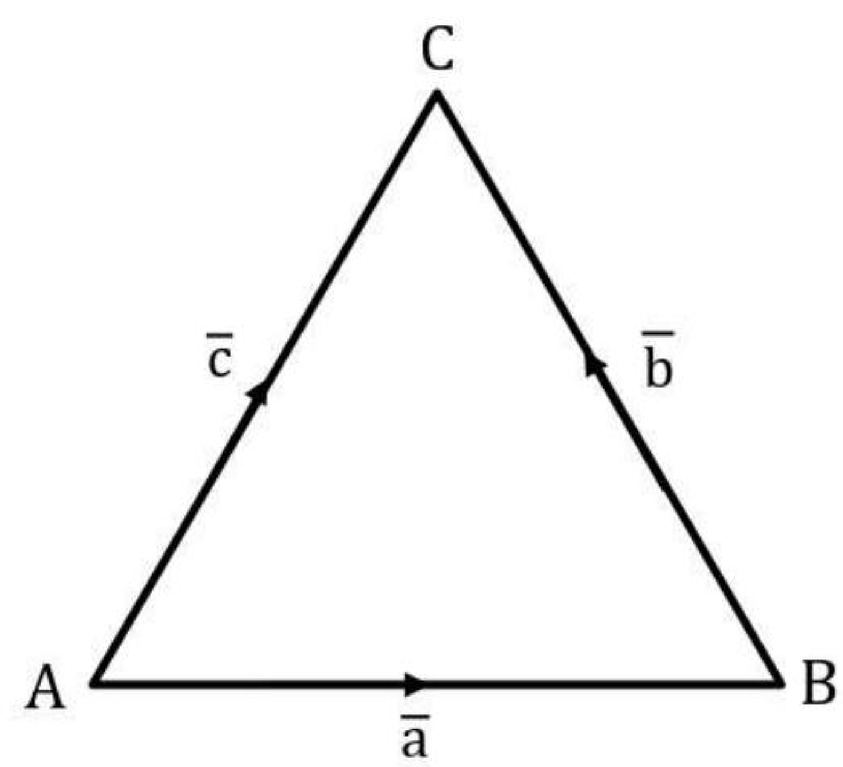

**Download from www.arjun00.com.np

In the adjoining figure, $\vec{a}$ and $\vec{b}$ be the two forces acting simultaneously at a particle then their resultant becomes $\vec{c}$ represented by third side of a triangle in the opposite direction.

Mathematically;

$$\vec{a} + \vec{b} = \vec{c}$$

ii) Parallel axis Theorem for moment of Inertia

- It states that "the moment of inertia of a plane area about any axis parallel to the centroidal axis is equal to the sum of moment of inertia about a parallel centroidal axis and the product of area and square of the distance between them ($i.e.$, to areas)." Mathematically;

$$I_{OO} = I_{XX} + A\bar{y}^2$$

AC

- Let us consider a plane area 'A' having XX and YY centroidal axis as shown in figure. For this let us consider an axis parallel to XX axis at a distance $\bar{y}$ from this axis.

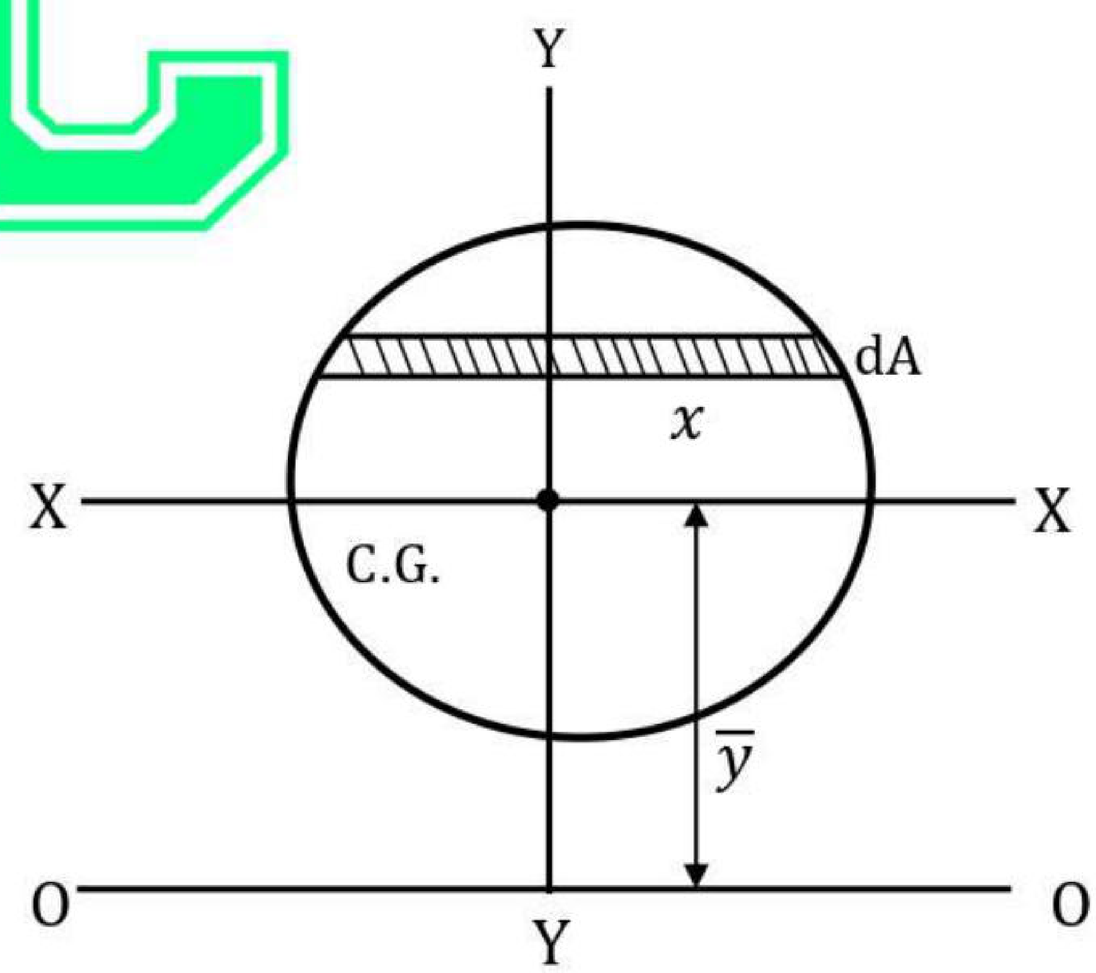

Take an elementary and dA at distance y form XX-axis.

We Know,

$$I_{XX} = \sum y^2 dA = \int y^2 dA$$

Also,

$$I_{\infty} = \sum (\bar{y} + y)^2 dA = \sum (\bar{y}^2 + 2\bar{y}y + y^2) dA$$

$$= \bar{y}^2 \sum dA + 2\bar{y} \sum y\, dA + \sum y^2\, dA = \bar{y}^2 \sum dA + 2\bar{y} \times 0 + I_{XX}$$

**Download from www.arjun00.com.np

$$= I_{XX} + A\bar{y}^2 \quad \left[\because \sum ydA = 0, because\ first\ moment\ of\ area\ about\ centroidal\ axis = 0\right]$$

iii) Different types of load and support in structure.

- **The different types of load are:-**

1) Point Load

It is assumed to act at a point. It may be vertical, horizontal or inclined. Unit; KN, Kg etc.

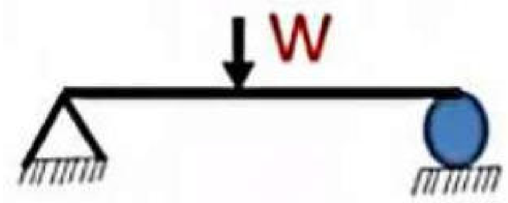

2) Uniformly distributed Load (UDL)

Load is distributed along the structure uniformly.

It is in rectangular form. Unit; KN/m, t/m, Kg/m etc.

Point Load = Length * Height

= Area of Rectangle (WL)

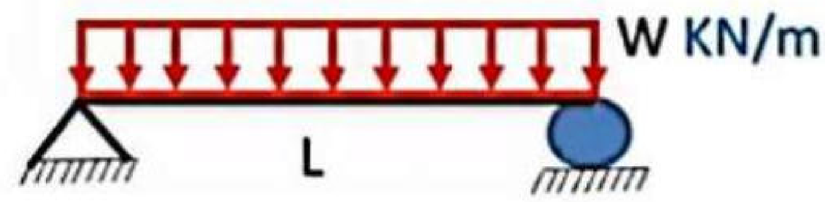

3) Uniformly Varying Load (UVL)

The load is vary from point to point in triangular form.

Unit; KN/m, t/m, Kg/m etc.

Point Load = ½ * Length * Height

= Area of Triangle (0.5WL)

This point load assumed to be acted form centroid of the triangle.

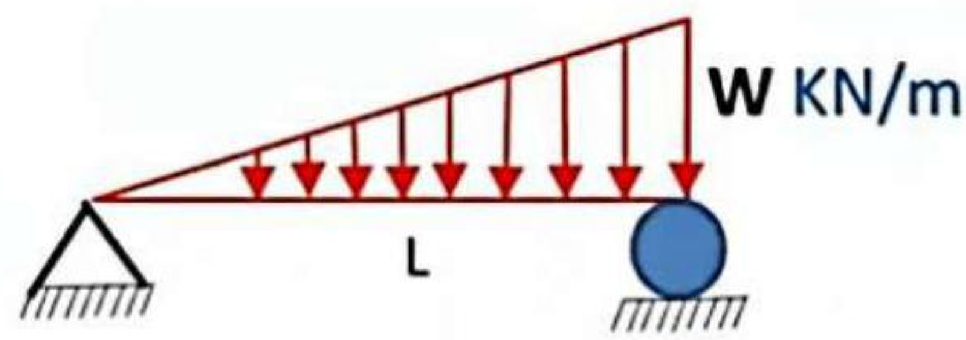

**Extra,

4) Wind load: Load due to wind

5) Seismic load: Load due to earthquake

6) Hydrostatic load: Load due to water

7) Snow load: Load due to snow and considered only in snowfall places.

8) Dead load and Live load

- Dead load is the self load or load of permanent structure.
- Live loads are movable loads.

9) Static Load and Dynamic load

- Static load are applied gradually but they don't move.
- Dynamic load gives rise to load and variation as well.

**Download from www.arjun00.com.np

- **The different types of Support are:-**

a) Roller support

- It gives rise to one force which is perpendicular to the plane supporting the plane.

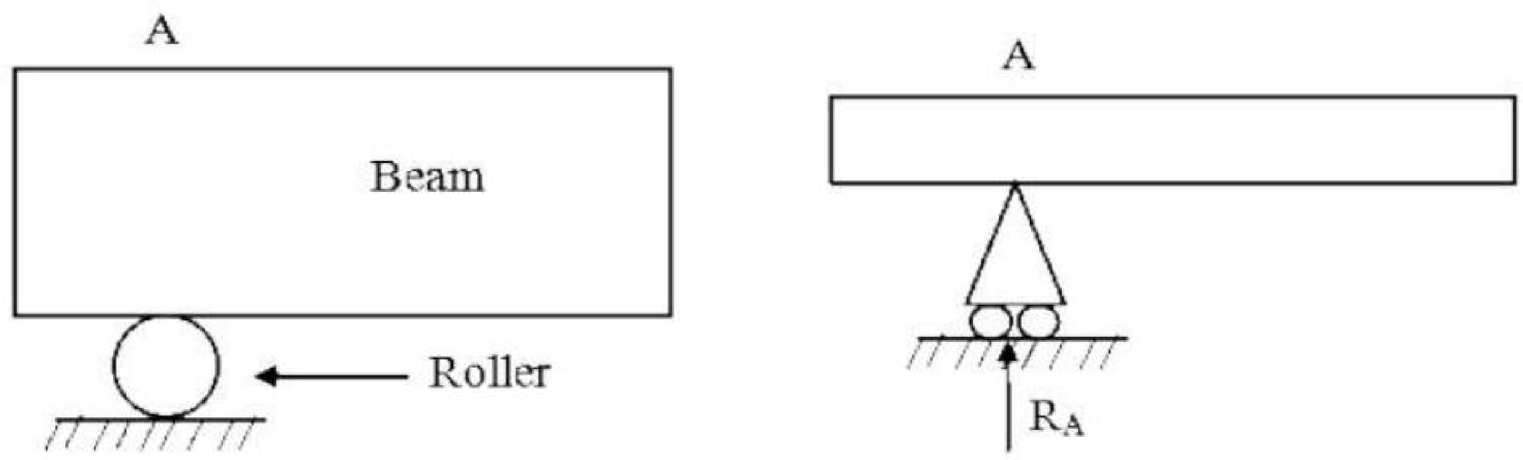

No. of reaction = 1

b) Hinge support

- It gives rise to one force reaction whose direction is unknown. It can be resolved into two forces along x and y axes.

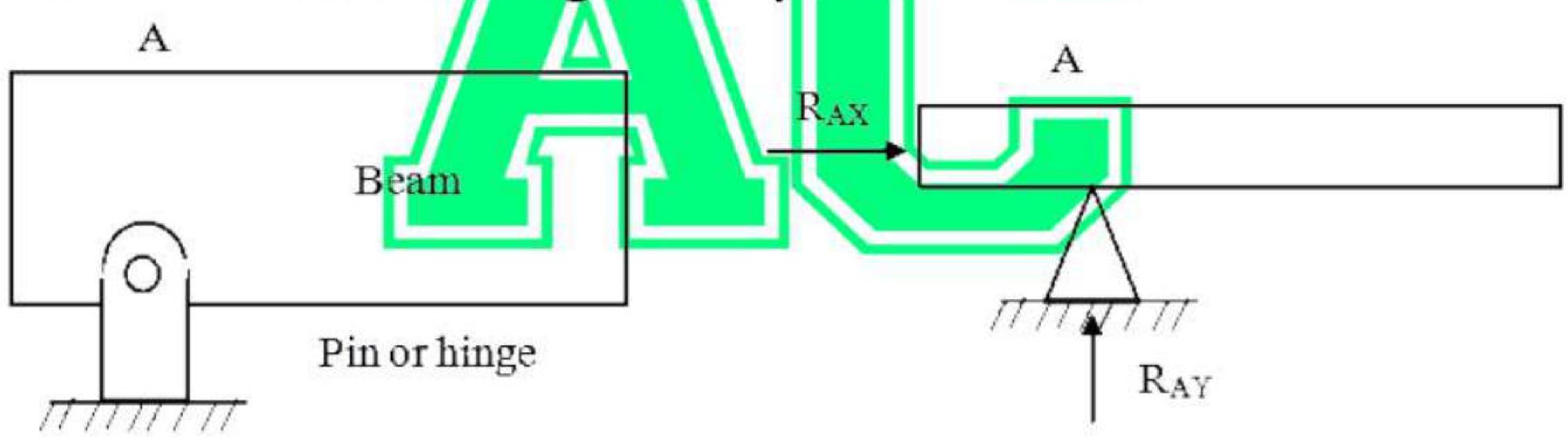

No. of reaction = 2

c) Fixed support

- It gives rise to one force reaction (having two components) and one reaction moment.

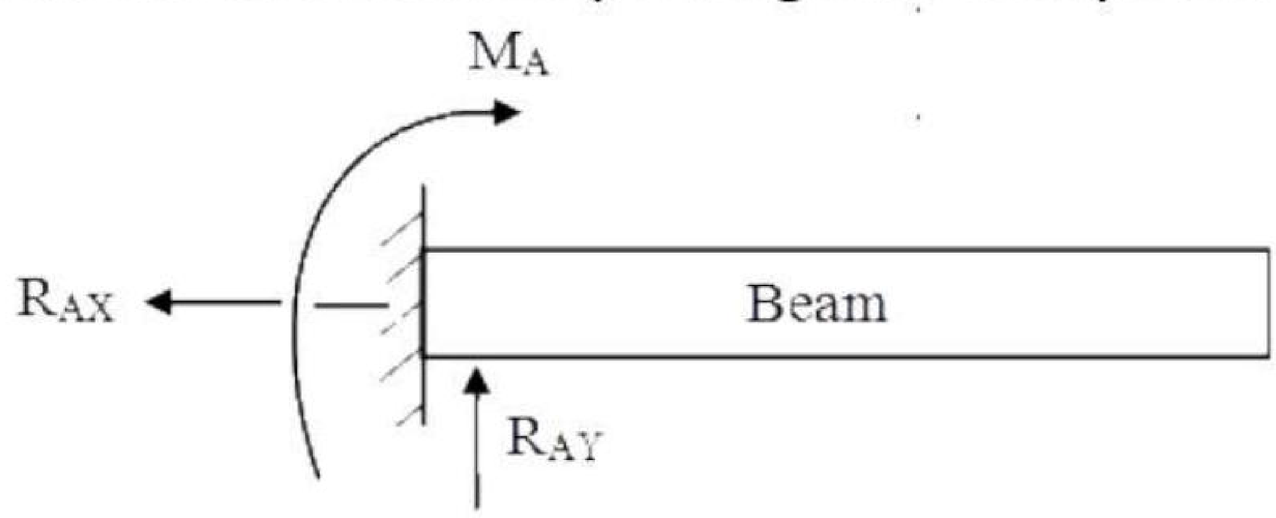

No. of reaction = 3

-The End-

**Download from www.arjun00.com.np

Applied Mechanics__(Engg. All) 2nd Sem

(2079) Question Paper Solution.

Compile & Written by © Arjun Chy
Website :- www.arjun00.com.np
Facebook :-www.facebook.com/Arjun00.com.np

1. Define applied mechanics with its scope in engineering.

- **Applied mechanics** also known as engineering mechanics is the branch of engineering which deals with the laws of mechanics as applied to the solution of engineering problems.
- **Scope of applied mechanics :-**
  - It is coupled with more specialized knowledge subject such as strength of materials, theory of structure, hydrostatics, etc.
  - It is foundation and an indispensable pre-requisite to the study of most engineering sciences.
  - It is used in the analysis of forces acting on roof and bridge, truss, rocket propulsion, etc.
  - Basics for study and understand structural engineering design of buildings.

**Download from www.arjun00.com.np

b) The following forces act at a point, find the magnitude and direction of resultant force.

i) 25N inclined at 35° towards north of east.

ii) 30N towards north.

iii) 35N inclined at 45° towards north of west.

iv) 40N inclined at 40° towards south of west.

➢ **Solution**

The system is shown below in the figure.

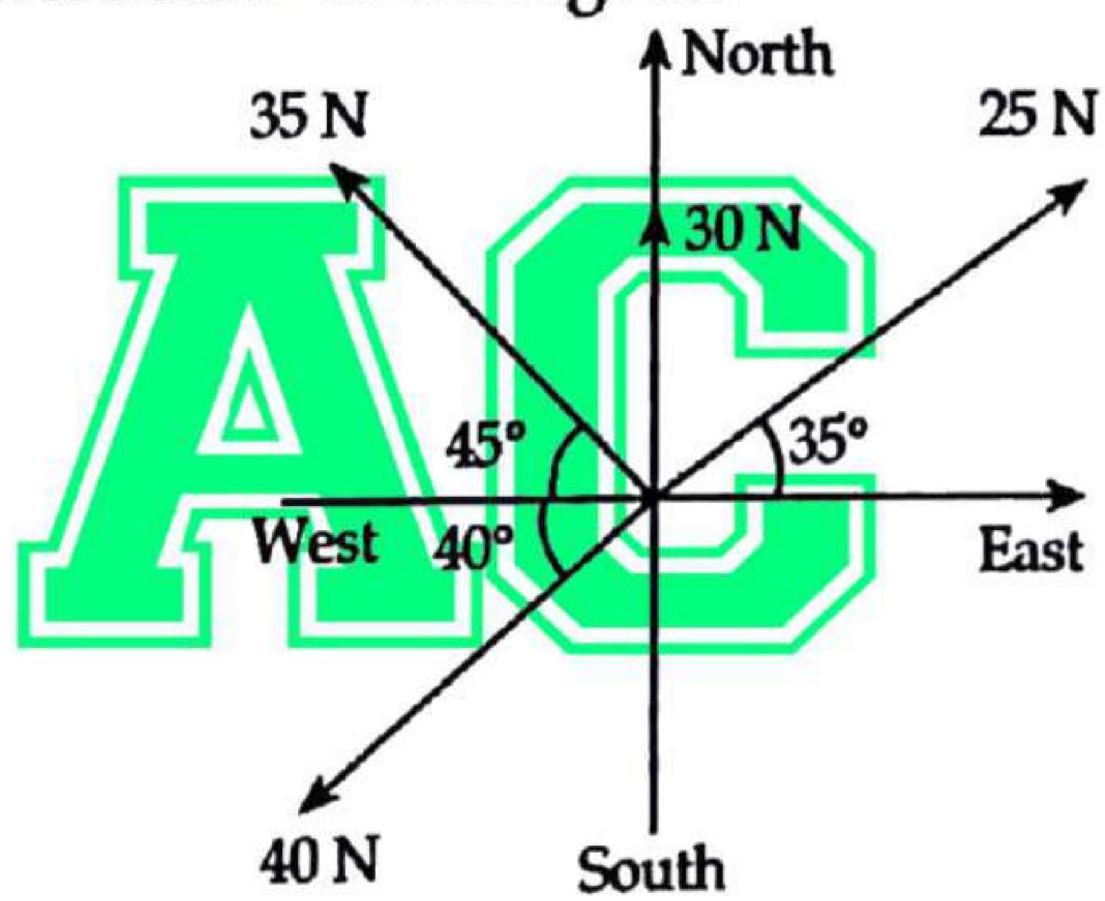

Now, resolving all the forces horizontally *i.e.*, along East–West line.

$(\xrightarrow{+ve})\sum H = 25\cos 35° + 30\cos 90° - 35\cos 45° - 40\cos 40°$

$\sum H = 20.47 + 0 - 24.74 - 30.64 = -34.91$ N

and, resolving vertically; we get,

$(\uparrow +ve)\sum V = 25\sin 35° + 30\sin 90° + 35\sin 45° - 40\sin 40°$

$= 14.33 + 30 + 24.74 - 25.711 = 43.359$ N

Hence, magnitude of resultant (R);

$$R = \sqrt{(\sum H)^2 + (\sum V)^2} = \sqrt{(-34.91)^2 + (43.359)^2} = 55.66 \text{ N}$$

Now, for the direction of the resultant force;

Let θ = angle which the resultant force makes with East.

**Download from www.arjun00.com.np

$$\tan\theta = \frac{\sum V}{\sum H} = \frac{43.359}{-34.91} = -1.242$$

or, $\theta = \tan^{-1}(-1.242)$

$= -51.16°$

Since, $\sum H$ is negative and $\sum V$ is positive.

Hence, θ lies between 90° and 180°.

so, actual $\theta = 180° - 51.16°$

$= 128.84°$

2. a) Define Free Body Diagram. Write down the steps to draw FBD.

- The force analysis of a structure is made in a simplified way by considering the equilibrium of a portion of the structure. For that, the portion is drawn separately showing applied forces, self-weight and reactions at the point of contact with other bodies. The resulting diagram is known as **Free Body Diagram** (FBD). So, FBD is a sketch of body (space diagram) drawn in such a way that it shows all the reaction forces, applied forces and moments on the body.

- **The steps to draw FBD are :-**

  - FBD should have no external supports or connections.
  - The self weight (W = mg) should be indicated with vertical downward arrow.
  - The reactions from the supports and connections should be indicated.
  - The uncut member force should not be shown in FBD.
  - Tension in rope or string is directed towards support.
  - The adopted coordinate system and sense of unknown force should be shown in FBD.

**Download from www.arjun00.com.np

b) State and prove Lami's Theorem.

- **Statement**

"If three coplanar forces acting at a point be in equilibrium, then each force is proportional to the sine of the angle between the other two."
Mathematically;

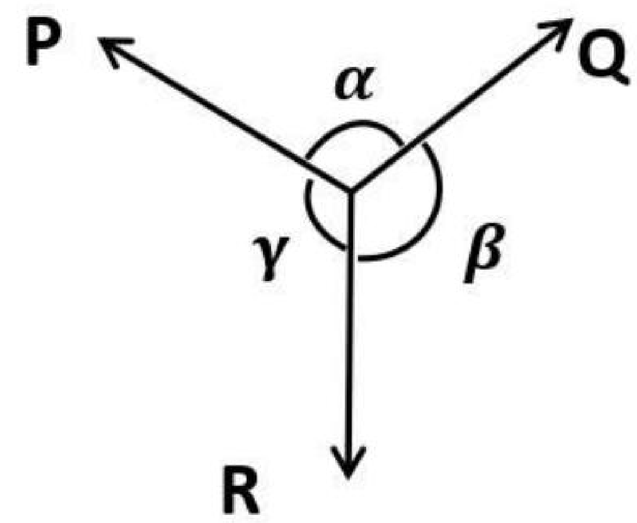

$$\frac{P}{\sin\beta} = \frac{Q}{\sin\gamma} = \frac{R}{\sin\alpha}$$

where, P, Q and R are three forces and β, γ, α are angles as shown in the figure.

Proof

Let us consider three coplanar forces P, Q and R. Let the opposite angles of the three forces be β, γ and α respectively as in the figure.

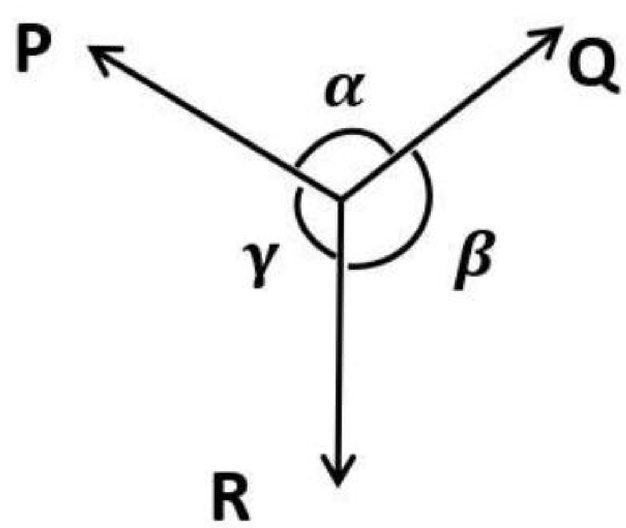

Forming triangle with these forces,

Let angle between Q & R force are 'β' $i.e.$, ∠QOM = 'β'
, angle between P & Q forces are 'α ' $i.e.$, ∠PNO = 'α'
, angle between P & R forces are 'γ' $i.e.$, ∠RMN = 'γ'

**Download from www.arjun00.com.np

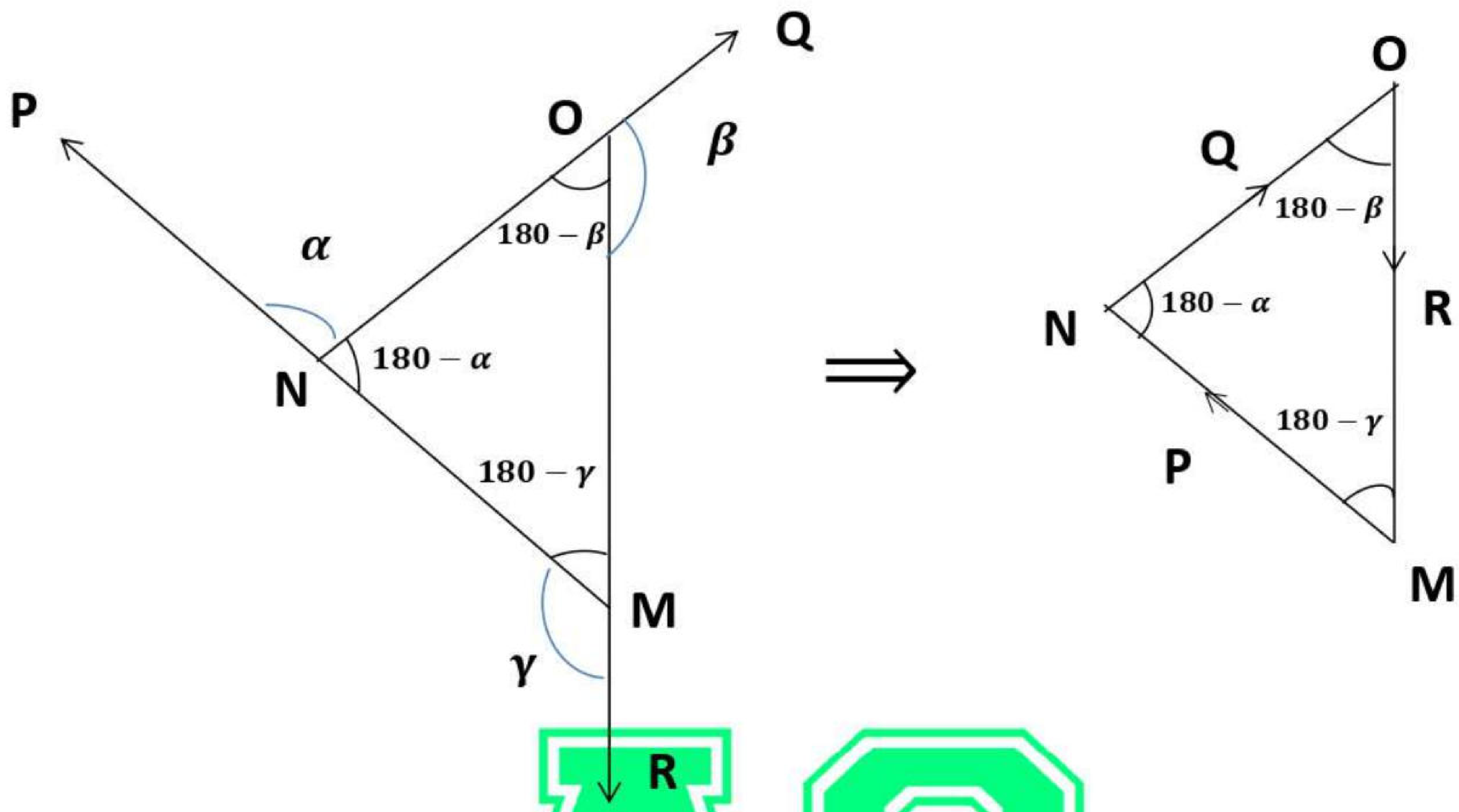

Now,

$\angle MON = 180 - \angle PNO$, $\angle NMO = 180 - \angle RMN$, $\angle MON = 180 - \angle QOM$

$= 180 - \alpha$ $= 180 - \gamma$ $= 180 - \beta$

Using Sine law in Δ MON

$$\frac{P}{\sin(\angle MON)} = \frac{Q}{\sin(\angle NMO)} = \frac{R}{\sin(\angle MNO)}$$

$$\frac{P}{\sin(180 - \beta)} = \frac{Q}{\sin(180 - \gamma)} = \frac{R}{\sin(180 - \alpha)}$$

$$\frac{\mathbf{P}}{\sin \boldsymbol{\beta}} = \frac{\mathbf{Q}}{\sin \boldsymbol{\gamma}} = \frac{\mathbf{R}}{\sin \boldsymbol{\alpha}}$$

Proved.

**Download from www.arjun00.com.np

c) A spherical ball of weight 200N rests in a V-shaped trough, whose sides are inclined shown in figure. Find the reaction at each side.

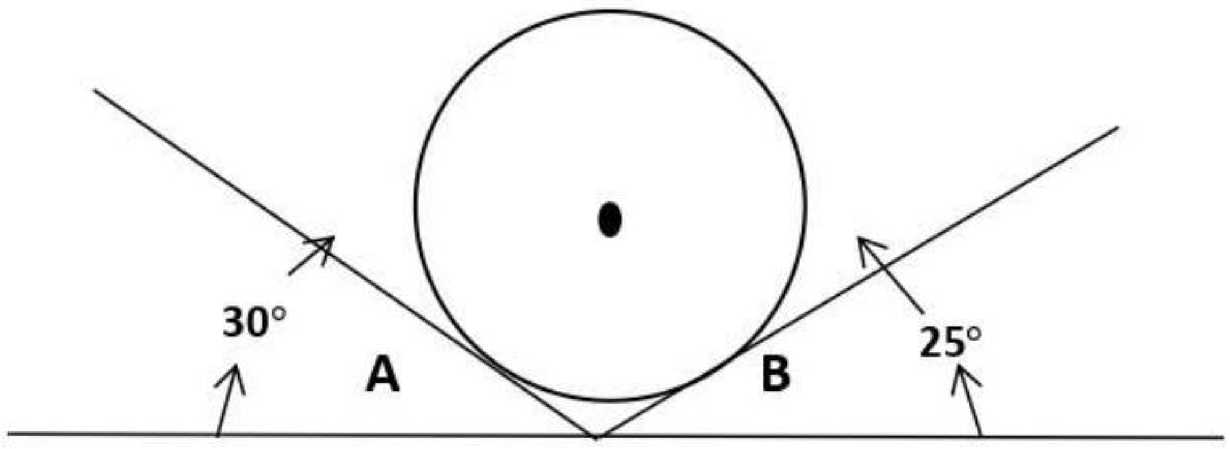

➢ **Solution,**

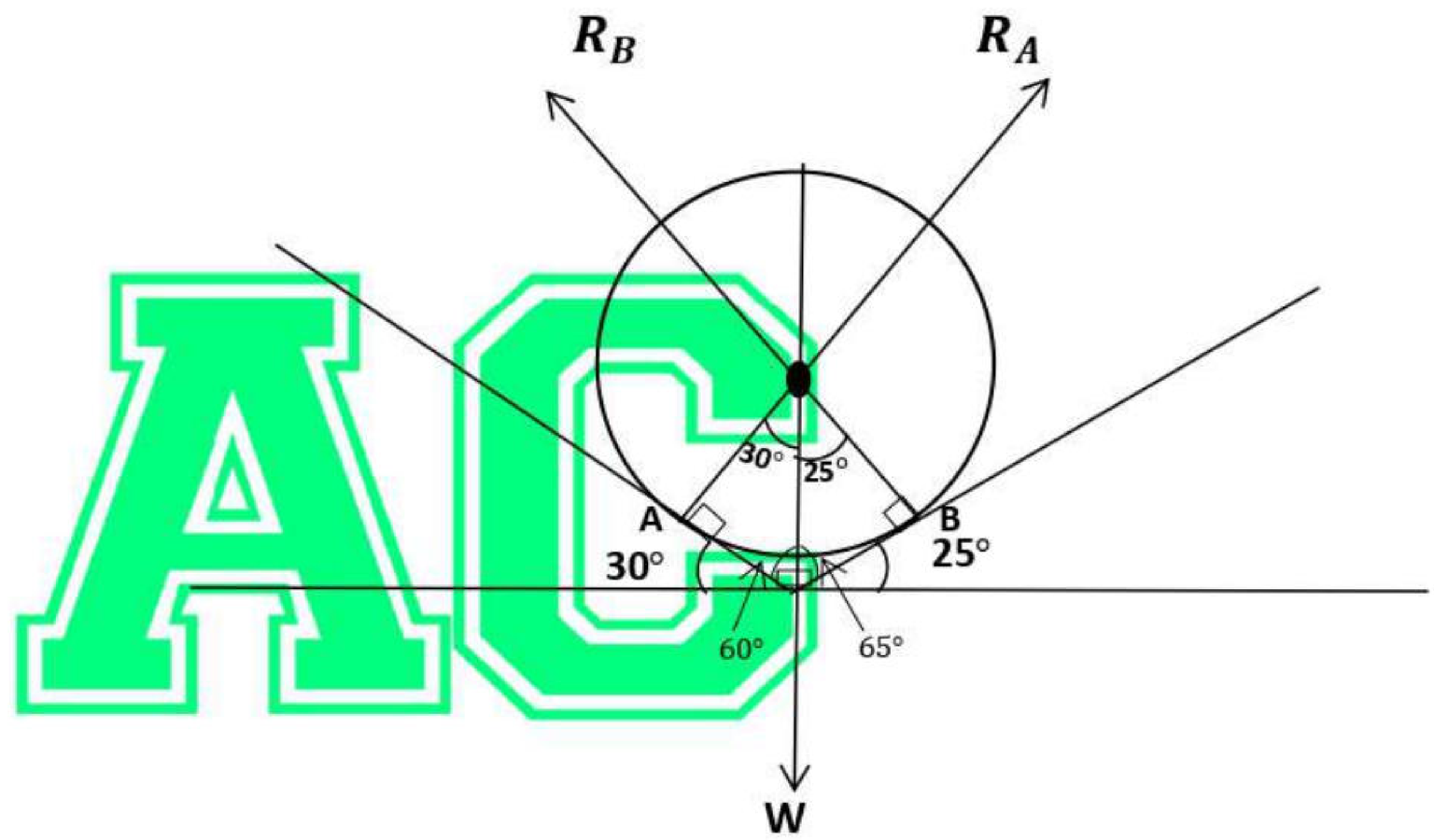

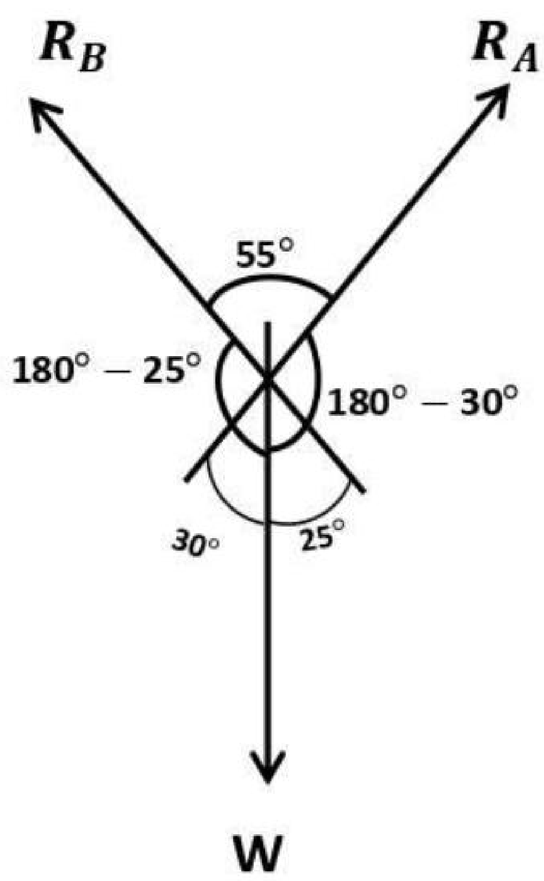

**Download from www.arjun00.com.np

Applying Lami's Theorem ;

$$\frac{R_A}{\sin(180 - 25)} = \frac{R_A}{\sin(180 - 30)} = \frac{W}{\sin(55)}$$

$$Or, \frac{R_A}{\sin(155)} = \frac{R_A}{\sin(150)} = \frac{200}{\sin(55)}$$

Taking first and last ,

$$\frac{R_A}{\sin(155)} = \frac{200}{\sin(55)}$$

$$R_A = \frac{200}{\sin(55)} \times \sin(155) = \mathbf{103.184\ N}$$

Similarly, Taking Second and last

$$\frac{R_A}{\sin(150)} = \frac{200}{\sin(55)}$$

$$R_B = \frac{200}{\sin(55)} \times \sin(150) = \mathbf{122.077\ N}$$

3. a) Define friction. Write down the laws of friction.

- When a body slides over another body, a force is exerted a surface of contact by the stationary body on a moving body. The resisting force is called the force of friction and acts in the direction opposite to the direction of motion.

**Download from www.arjun00.com.np

➢ The laws of friction are as follows;

- The force of static friction always acts in a direction, opposite to that in which the body tends to move.
- The magnitude of the force of friction is exactly equal to the force, which tends to move the body.
- The magnitude of the following friction bears a constant ratio, to the normal reaction between the two surfaces.

  i. e., $\frac{F}{R}$ = Constant

  $\therefore \quad \frac{F}{R} = \mu;$

  Where, μ is the coefficient of friction.

  F is the limiting friction.

  R is the normal reaction.

- The force of friction is depends upon the roughness of the surfaces.
- The force of friction is independent of the area of the contact between two surfaces.

b) Explain the condition of tipping and sliding of a block.

➢ ***Refer to the Solution 2078 of Q. No. 3(a) on page 11.***

or) A force of 100N pulls a body of weights 150N up in an inclined plane. The force being applied parallel to inclined plane. The inclined plane makes an angle of 30° with the horizontal. Calculate the coefficient of friction.

**Download from www.arjun00.com.np

➢ Solution,

Given that;

Weight of body (W) = 150 N

Angle of inclination (θ) = 30°

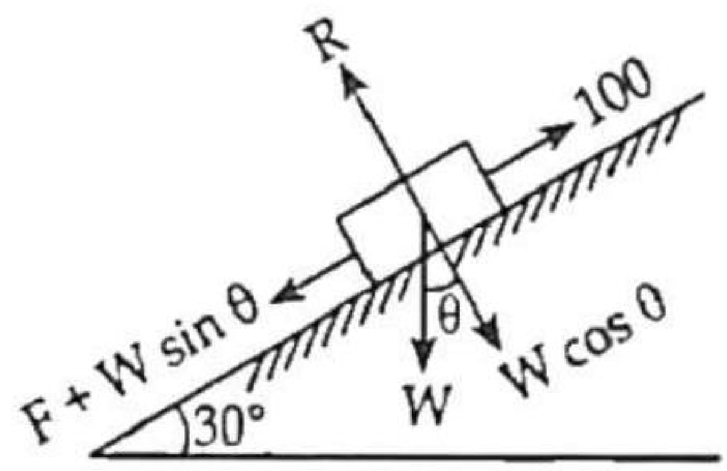

Let, 'R' be the normal reaction, μ be the coefficient of the friction and θ be an angle of inclination of plane.

We know that;

$$\text{Frictional force (F)} = \mu R \qquad (1)$$
$$= \mu W \cos\theta$$
$$= \mu \times 150 \cos 30°$$

Again, we have from figure;

$$F + W\sin\theta = 100$$
$$F + 150\sin 30° = 100$$

or, $\mu \times 150\cos 30° + 150\sin 30° = 100$ [From equation (1)]

or, $\mu \times 150\cos 30° = 100 - 150\sin 30°$

$$\text{or, } \mu = \frac{100 - 150\sin 30°}{150\cos 30°}$$

∴ Coefficient of friction (μ) = 0.192

4. a) Locate the centroid of give shaded area.

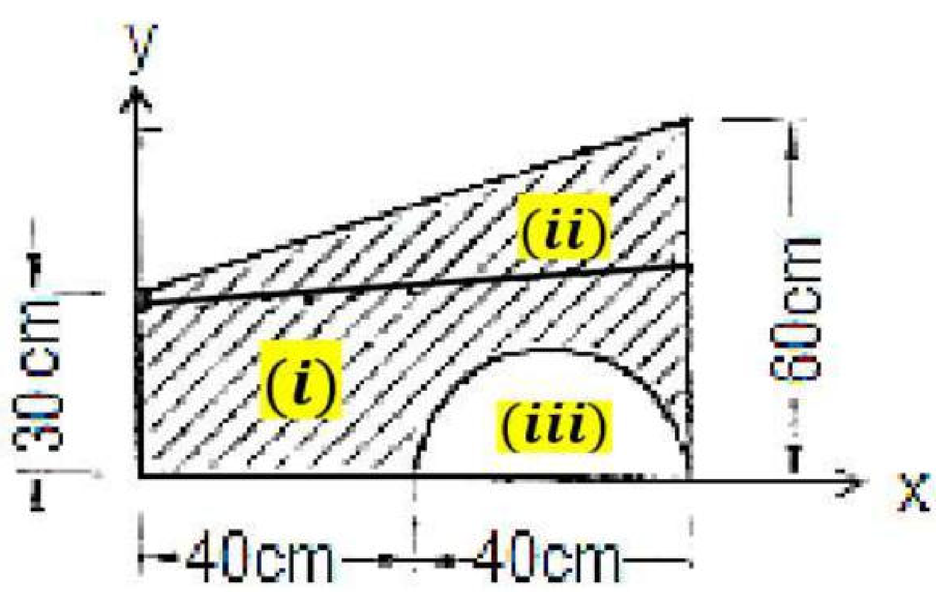

➢ Solution

**Download from www.arjun00.com.np

Figure	$\bar{X}$ (cm)	$\bar{Y}$ (cm)	Area(cm^2)
i) $+ve$	$\frac{80}{2} = 40$	$\frac{30}{2} = 15$	$80 \times 30 = 2400$
ii) $+ve$	$2 \times \frac{80}{3} = 53.33$	$30 + \frac{30}{3} = 40$	$\frac{1}{2} \times 80 \times 30 = 1200$
iii) $-ve$	$40 + \frac{40}{2} = 60$	$\frac{4}{3\pi} \times 20 = 8.488$	$\frac{1}{2}\pi(20)^2 = 628.318$

$$\bar{\mathbf{X}} = \frac{\sum AX}{\sum A} = \frac{A_1X_1 + A_2X_2 - A_3X_3}{A_1 + A_2 - A_3}$$

$$= \frac{2400 \times 40 + 1200 \times 53.33 - 628.318 \times 60}{2400 + 1200 - 628.318}$$

$$= \mathbf{41.154}\boldsymbol{cm}$$

$$\bar{\mathbf{Y}} = \frac{\sum AY}{\sum A} = \frac{A_1Y_1 + A_2Y_2 - A_3Y_3}{A_1 + A_2 - A_3}$$

$$= \frac{2400 \times 15 + 1200 \times 40 - 628.318 \times 8.488}{2400 + 1200 - 628.318}$$

$$= \mathbf{26.472}\boldsymbol{cm}$$

Hence,

The centroid of shaded figure $(\bar{X}, \bar{Y}) = (\mathbf{41.154}, \mathbf{26.472})\boldsymbol{cm}$

**Download from www.arjun00.com.np

or) Define the terms: centre of gravity, center of mass, centroid and axis of symmetry.

- **Centre of gravity** is defined as the point through which the whole weight of the body is assumed to act. It is denoted by c.g. or G.
- **Centre of mass** is the point where the whole mass of body is assumed to act. It differs from centre of gravity only when the gravitational field is not uniform and non-parallel.
- **Centroid** is defined as the point where the whole area of the figure is assumed to be concentrated. It is analogous to centre of gravity when a body has area but not weight.

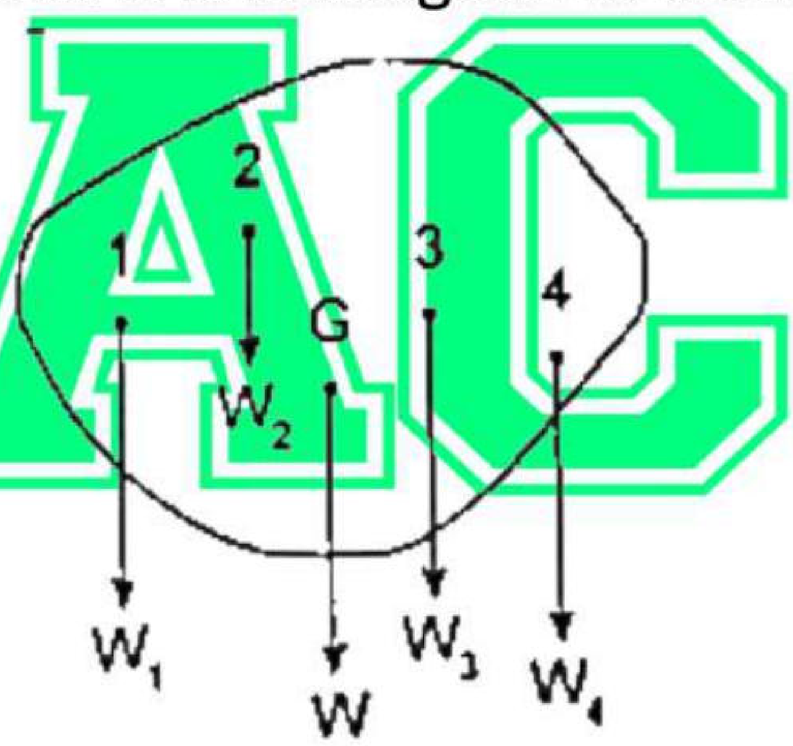

- **Axis of symmetry**

  A line through a shape so that each side is a mirror image. When the shape is folded in half along the axis of symmetry, then the two halves match up.

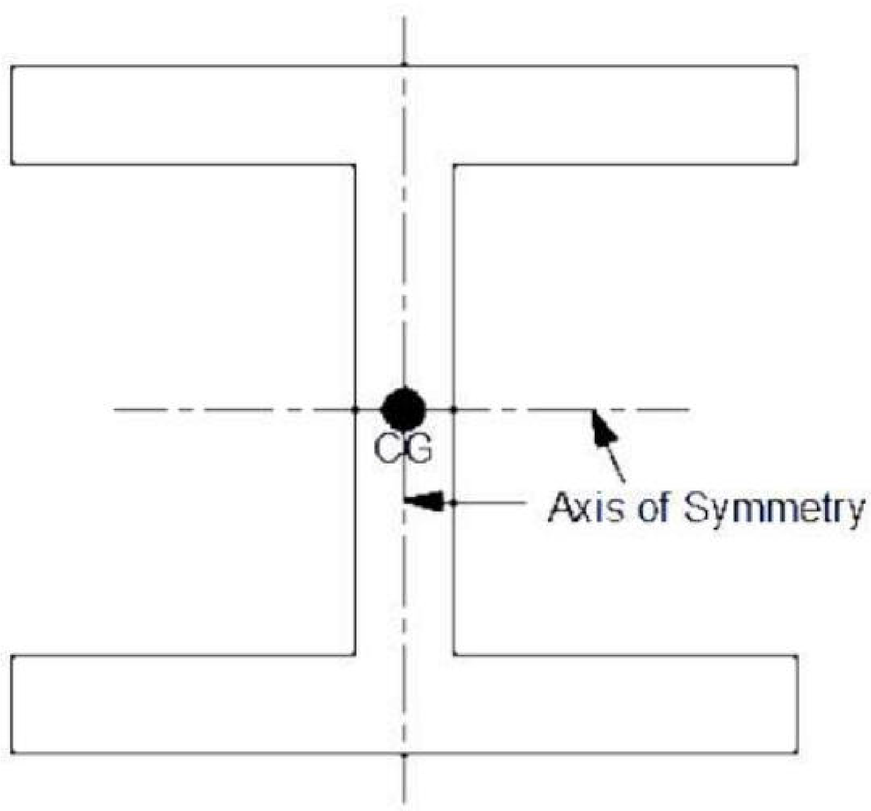

**Download from www.arjun00.com.np

b) State parallel axis theorem. Find the moment of inertia about centroidal x-axis of the given figure.

- It states that "the moment of inertia of a plane area about any axis parallel to the centroidal axis is equal to the sum of moment of inertia about a parallel centroidal axis and the product of area and square of the distance between them ($i.e.$, to areas)." Mathematically;

$$I_{00} = I_{XX} + A\bar{y}^2$$

-

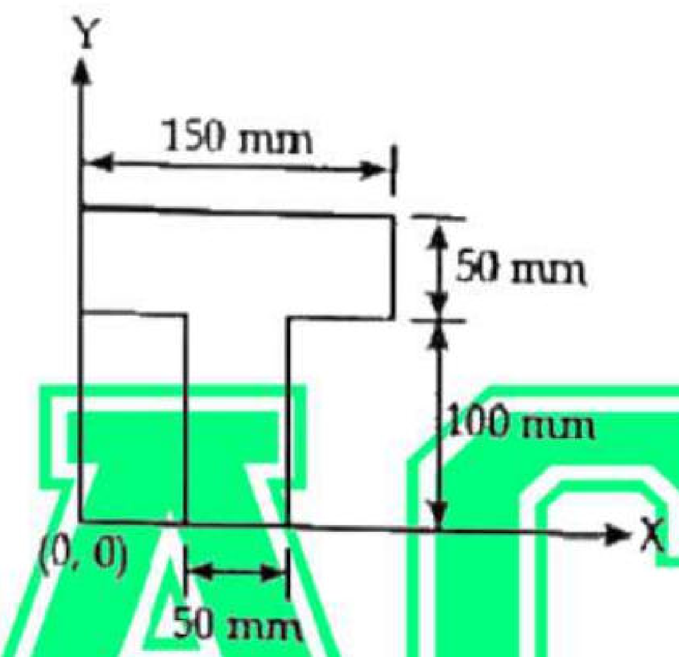

Solution:

Let us divide the given figure or T-section into two parts and the reference axis is taken which is given.

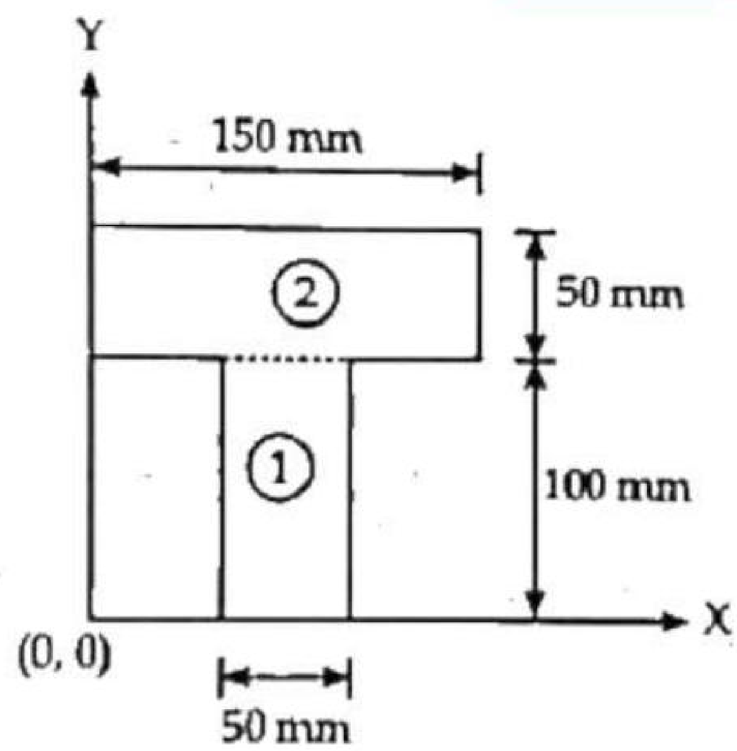

Due to symmetry, so,

$$\bar{x} = \frac{150}{2} = 75 \text{ mm}$$

$$y_1 = 50 \ , \ y_2 = 100 + \frac{50}{2} = 125$$

and, $\bar{y} = \dfrac{a_1 y_1 + a_2 y_2}{a_1 + a_2}$

**Download from www.arjun00.com.np

$$= \frac{(100 \times 50)(50) + (50 \times 150)(125)}{5000 + 7500}$$

$$= \frac{250000 + 937500}{5000 + 7500}$$

$$= 95 \text{ mm}$$

M.I. about (centroidal axis) XX-axis;

$$I_{XX} = (I_{XX})_1 + (I_{XX})_2$$

$$= (I_{C.G._1})_X + A_1(\bar{y} - y_1)^2 + (I_{C.G._2})_X + A_2(\bar{y} - y_2)^2$$

$$= \frac{b_1 h_1^3}{12} + b_1 h_1 (95 - 50)^2 + \frac{b_2 h_2^3}{12} + b_2 h_2 (95 - 125)^2$$

$$= \frac{50(100)^3}{12} + (50 \times 100)(2025) + \frac{150(50)^3}{12} + (150 \times 50)(900)$$

$$= 4166666.67 + 10125000 + 1562500 + 6750000$$

$$= 22604166.67 \text{ mm}^4$$

5. a) What are different types of loads in any structure.

- **The different types of loads in any structure are:-**

1) Point Load

It is assumed to act at a point. It may be vertical, horizontal or inclined. Unit; KN, Kg etc.

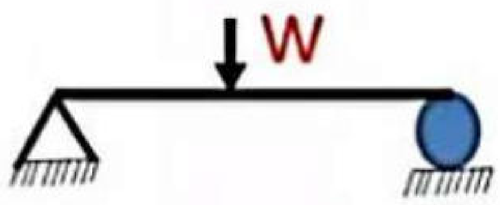

2) Uniformly distributed Load (UDL)

Load is distributed along the structure uniformly.

It is in rectangular form. Unit; KN/m, t/m, Kg/m etc.

Point Load = Length * Height

= Area of Rectangle (WL)

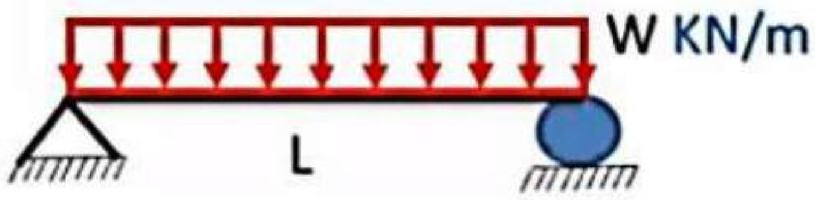

3) Uniformly Varying Load (UVL)

The load is vary from point to point in triangular form.

Unit; KN/m, t/m, Kg/m etc.

Point Load = ½ * Length * Height

= Area of Triangle (0.5WL)

This point load assumed to be acted form centroid of the triangle.

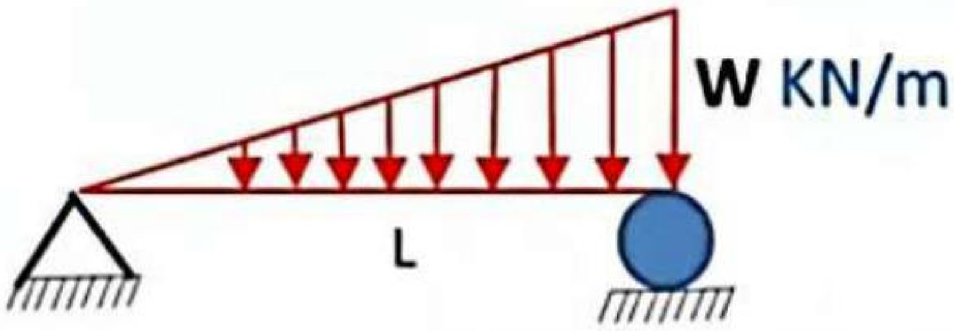

**Download from www.arjun00.com.np

b) Draw SFD and BMD for the beam loaded as shown in figure.

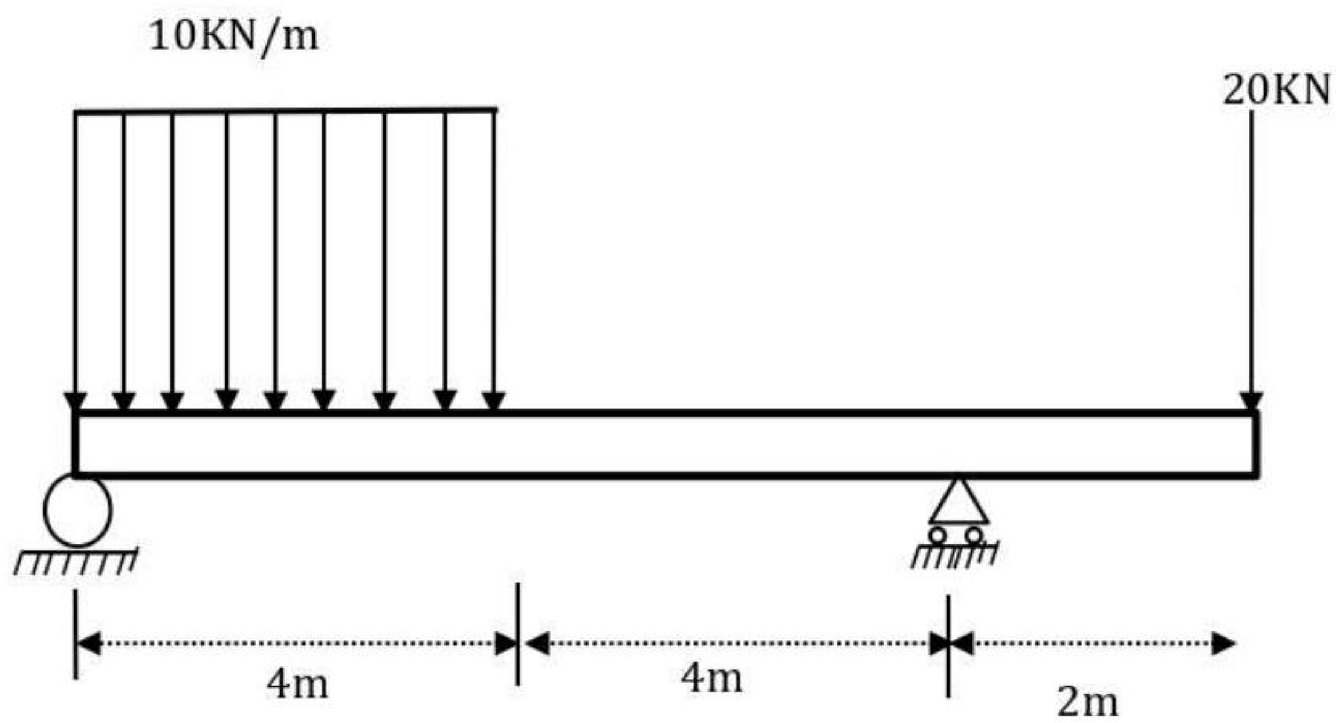

➢ **Solution**

Calculation Of Support Reaction:

R_{AY} & R_{CY} *are support reaction at A & C respectively*

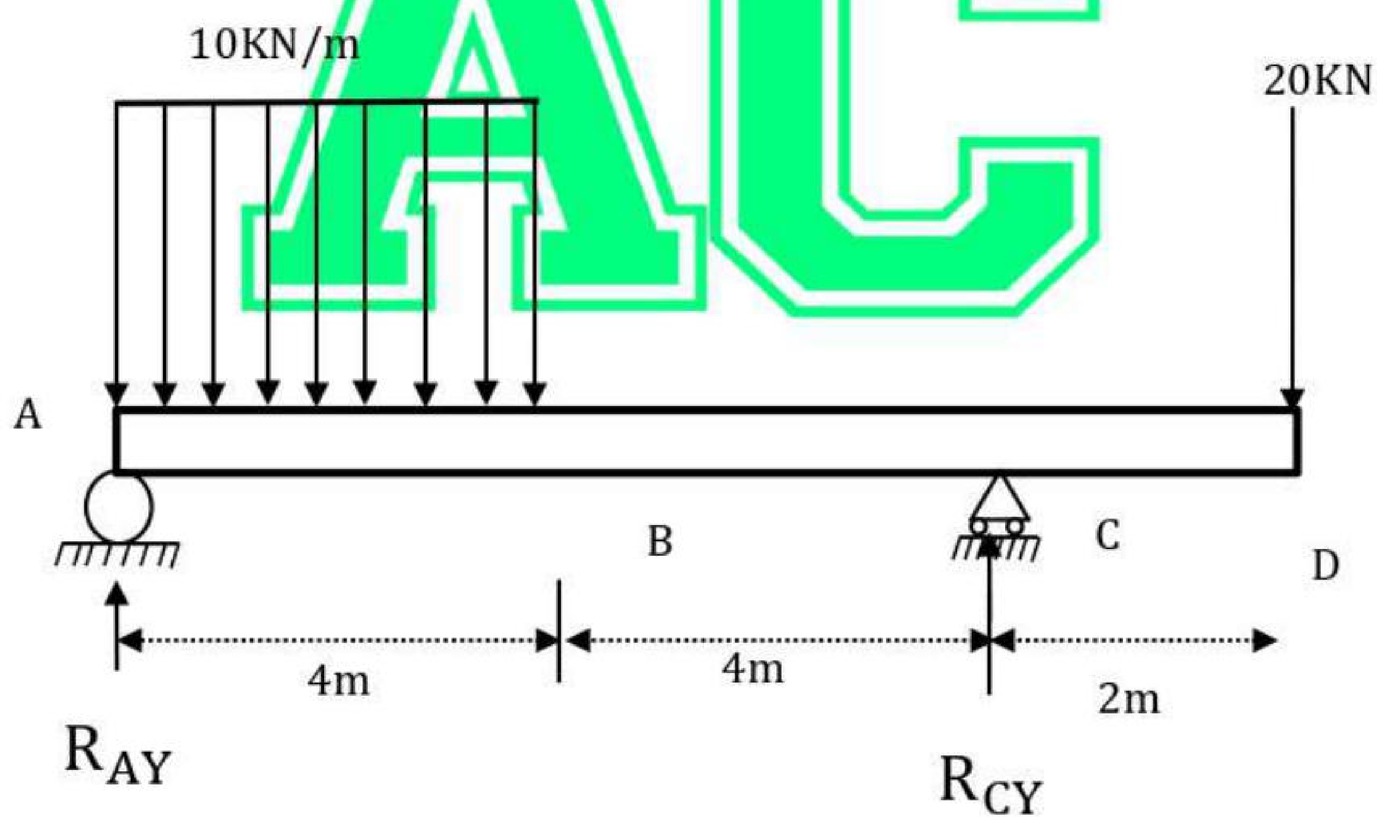

Taking moment at B ; we get,

$$(+\circlearrowleft)\sum M_A = 0$$

or, $R_{CY} \times 8 - (20 \times 10 + 10 \times 4 \times \frac{4}{2}) = 0$

or, $R_{CY} = \frac{280}{8}$

$\therefore R_{CY} = 35\ \text{kN}\ (\uparrow)$

**Download from www.arjun00.com.np

and $\uparrow (+ve) \sum F_y = 0$

or, $R_{AY} + R_{CY} - 10 \times 4 - 20 = 0$

or, $R_{AY} = 60 - 35$

$\therefore R_{AY} = 25\ \text{kN}\ (\uparrow)$

F.B.D.:

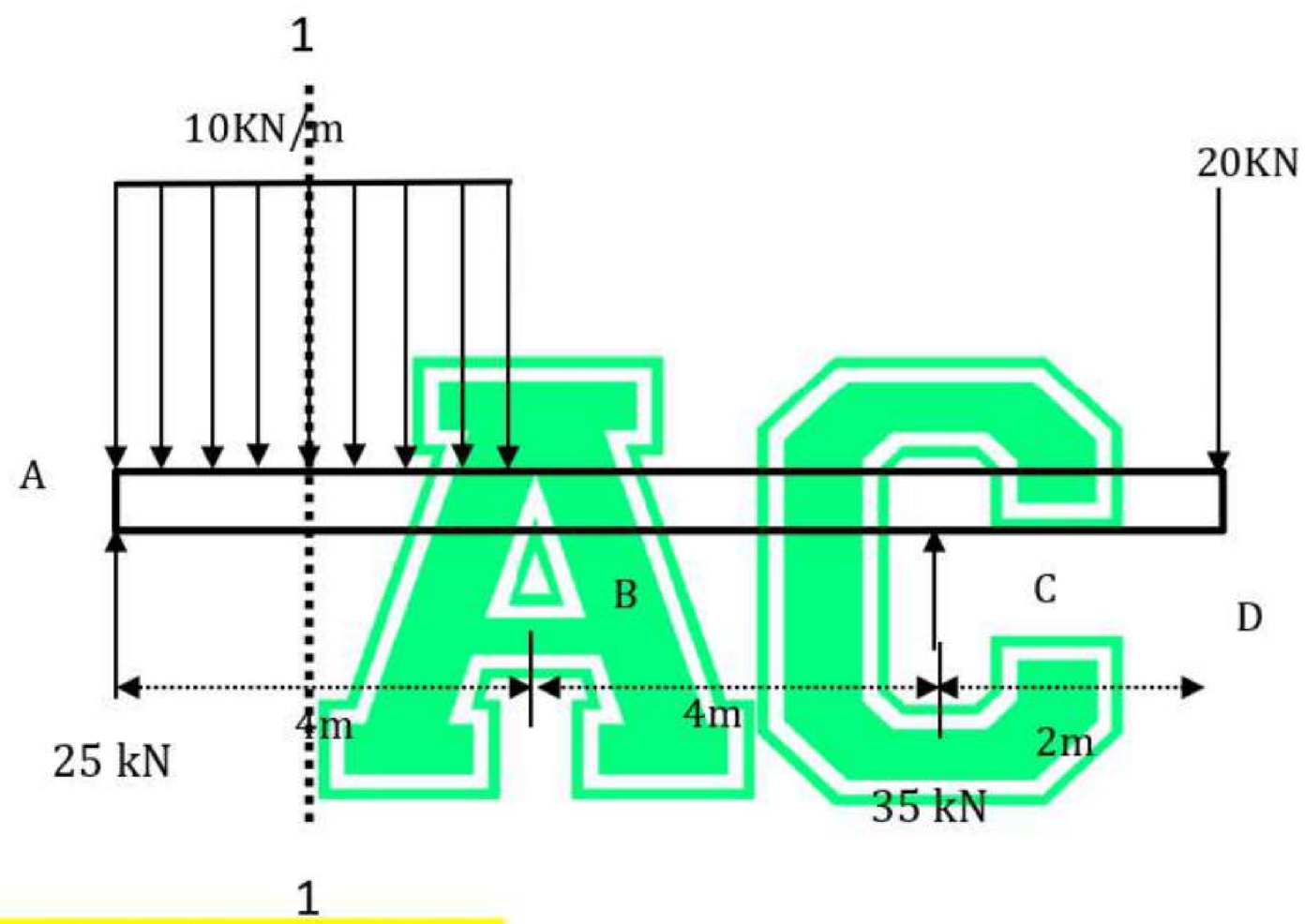

➢ Calculation Of SF and BM:

For member AB, Shear Force:

Taking left side of section 1-1 at x from A ,

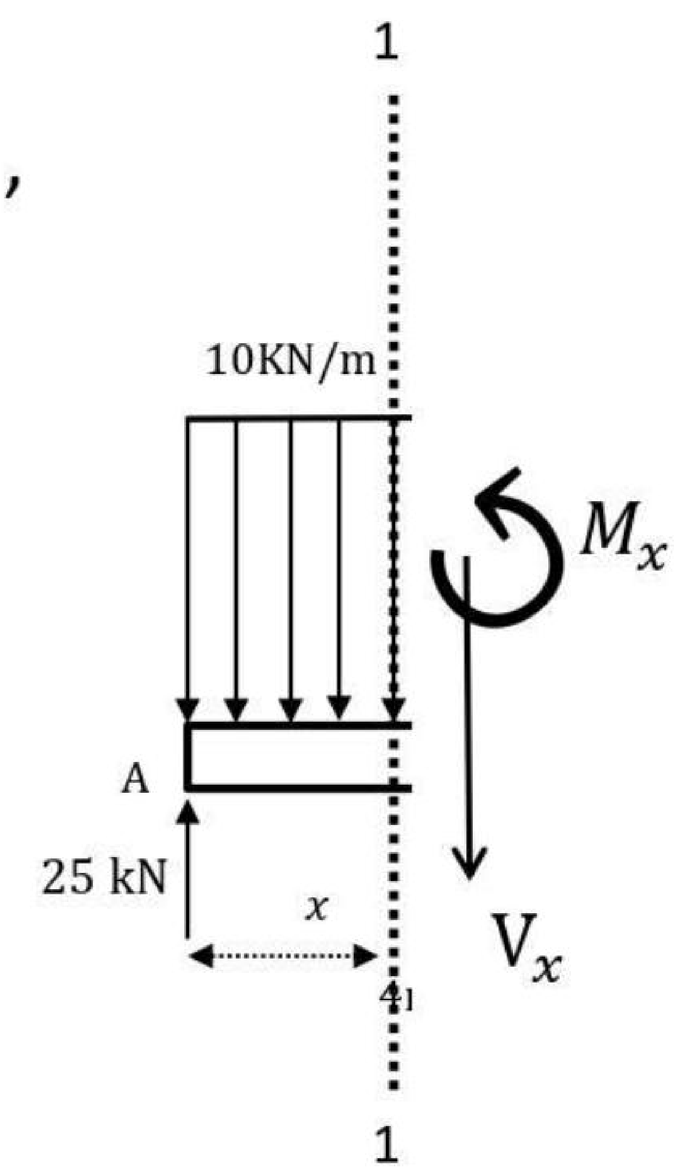

$(\uparrow +ve) \sum F_y = 0,$

$25 - V_x - 10x = 0$

Or, $V_x = 25 - 10x$ $\quad [\, x \in (1,4)\ ]$

At $x = 0, V_x = 25$ KN

At $x = 2, V_x = 25 - 10.2 = 5$ KN

At $x = 4, V_x = -15$ KN

**Download from www.arjun00.com.np

Point Where $V_x = 0, i.e\ SFD\ becomes\ Zero$

$25 - 10x = 0$

$\therefore x = 2.5m$

Bending Moment ;

$(+\circlearrowleft) \sum \mathrm{M_x} = 0$

$\mathrm{M_x} - 25\mathrm{x} + 10\mathrm{x} \times \frac{x}{2} = 0$

$\mathrm{M_x} = 25\mathrm{x} - 5x^2$

At $\mathrm{x} = 0, \mathrm{M_x} = \mathbf{M_A} = 0$

At $\mathrm{x} = 2, \mathrm{M_x} = 25 \times 2 - 5 \times 2^2 = 30\ \mathrm{KNm}$

At $\mathrm{x} = 4, \mathrm{M_x} = \mathbf{M_B} = 25 \times 4 - 5 \times 4^2 = 20\ \mathrm{KNm}$

At $\mathbf{x = 2.5}, \mathrm{M_x} = 25 \times (2.5) - 5 \times 2.5^2 = \mathbf{31.25\ KNm}$

<u>For member BCD</u>: Shear Force; From Left to right $(+ve\ \uparrow, \downarrow -ve)$

$B_L = -15KN$

$B_R = -15KN$

$C_L = -15KN$

$C_R = -15 + 35 = 20KN$

$D_L = 20KN$

$D_R = 20 - 20 = 0KN$

Bending Moment ; From Left to right

$M_B = 20KNm$

$M_C = 25 \times 8 - 10 \times 4 \times (2 + 4) = -40KNm$

$M_D = 25 \times 10 - 10 \times 4 \times (2 + 6) + 35 \times 2 = 0KNm$

**Download from www.arjun00.com.np

The SFD and BMD as Follow,

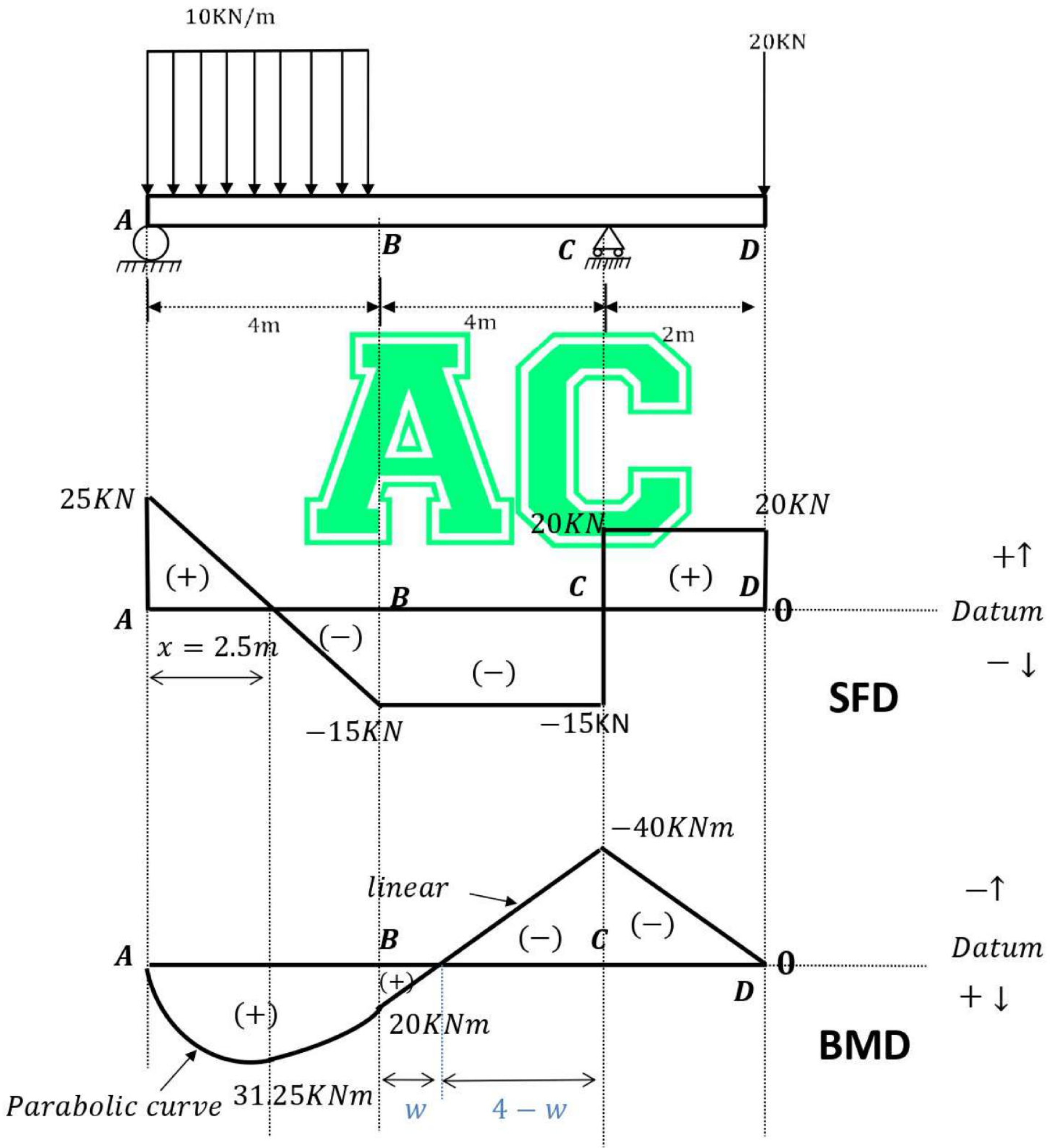

**Download from www.arjun00.com.np

**Additional if question ask: point of contraflexure (i.e. Point where BMD zero) then,

Using Similar Triangle (Linear portion Between B & C)

$$\frac{20}{w} = \frac{40}{4-w}$$

$$20(4-w) = 40w$$

$$(4-w) = 2w$$

$$4 = 3w$$

$$w = \frac{4}{3}m = 1.33m$$

$$\therefore W = 1.33m \; from \; \boldsymbol{B} \; where \; \boldsymbol{BMD \; becomes \; Zero}$$

c) Determine the forces in each member of the truss in given figure .

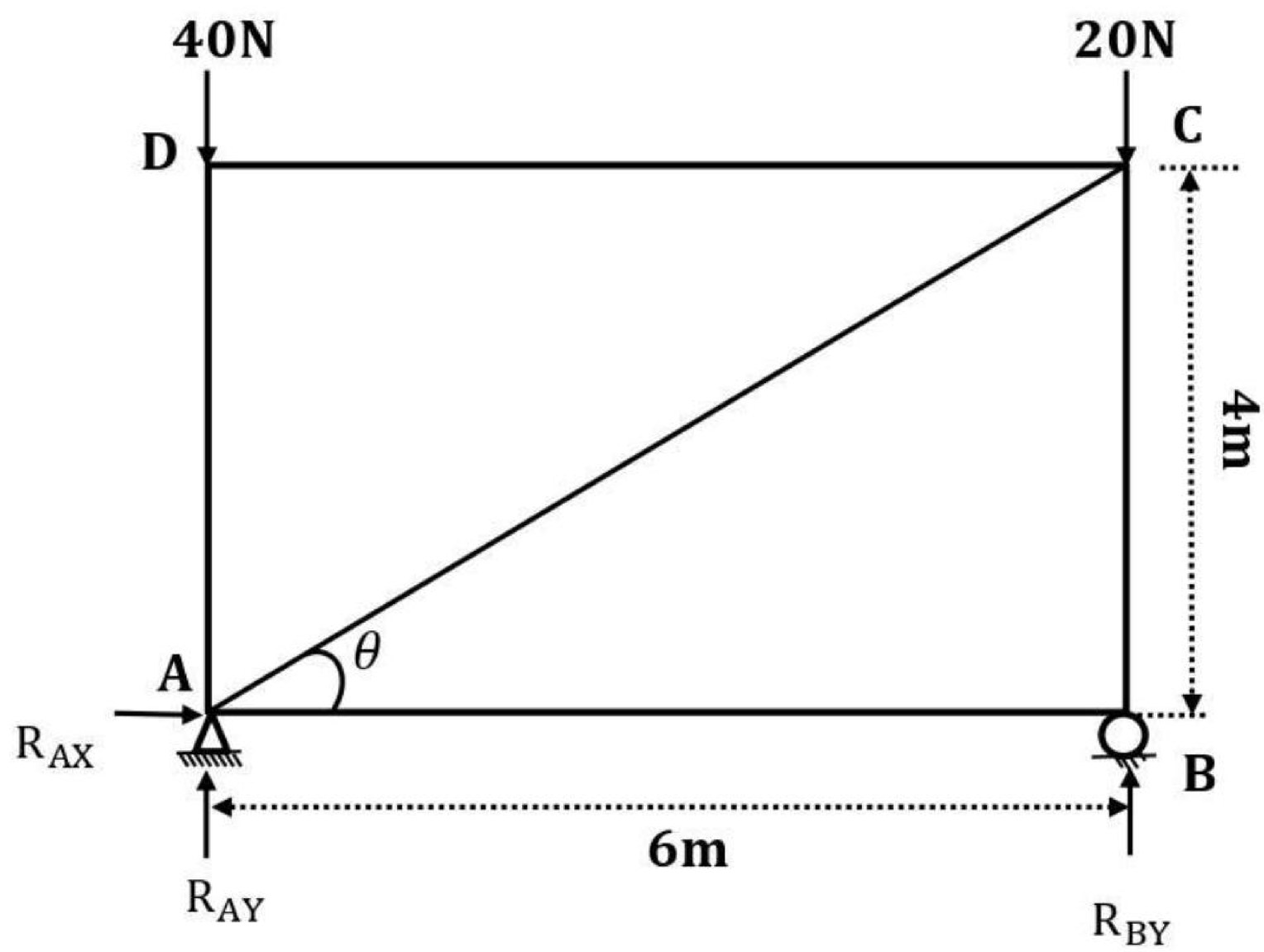

**Download from www.arjun00.com.np

➢Calculation of Support Reaction:

Let R_{AX} & R_{AY} be the horizontal reactions & Vertical reactions at support A. Let, R_{BY} be the reaction at support B.

$$(\rightarrow) + ve \sum F_X = 0$$

$$\therefore R_{AX} = 0$$

Taking moment at A and equating the same; we get,

$$(+\circlearrowleft) \sum M_A = 0$$

$$R_{BY} \times 6 - 20 \times 6 = 0$$

$$R_{BY} = \frac{20 \times 6}{6}$$

$$\therefore R_{BY} = 20\ N\ (\uparrow)$$

$$(\uparrow) + ve \sum F_Y = 0$$

$$R_{AY} + R_{BY} - 40 - 20 = 0$$

$$R_{AY} + 20 - 40 - 20 = 0$$

$$\therefore R_{AY} = 40\ N\ (\uparrow)$$

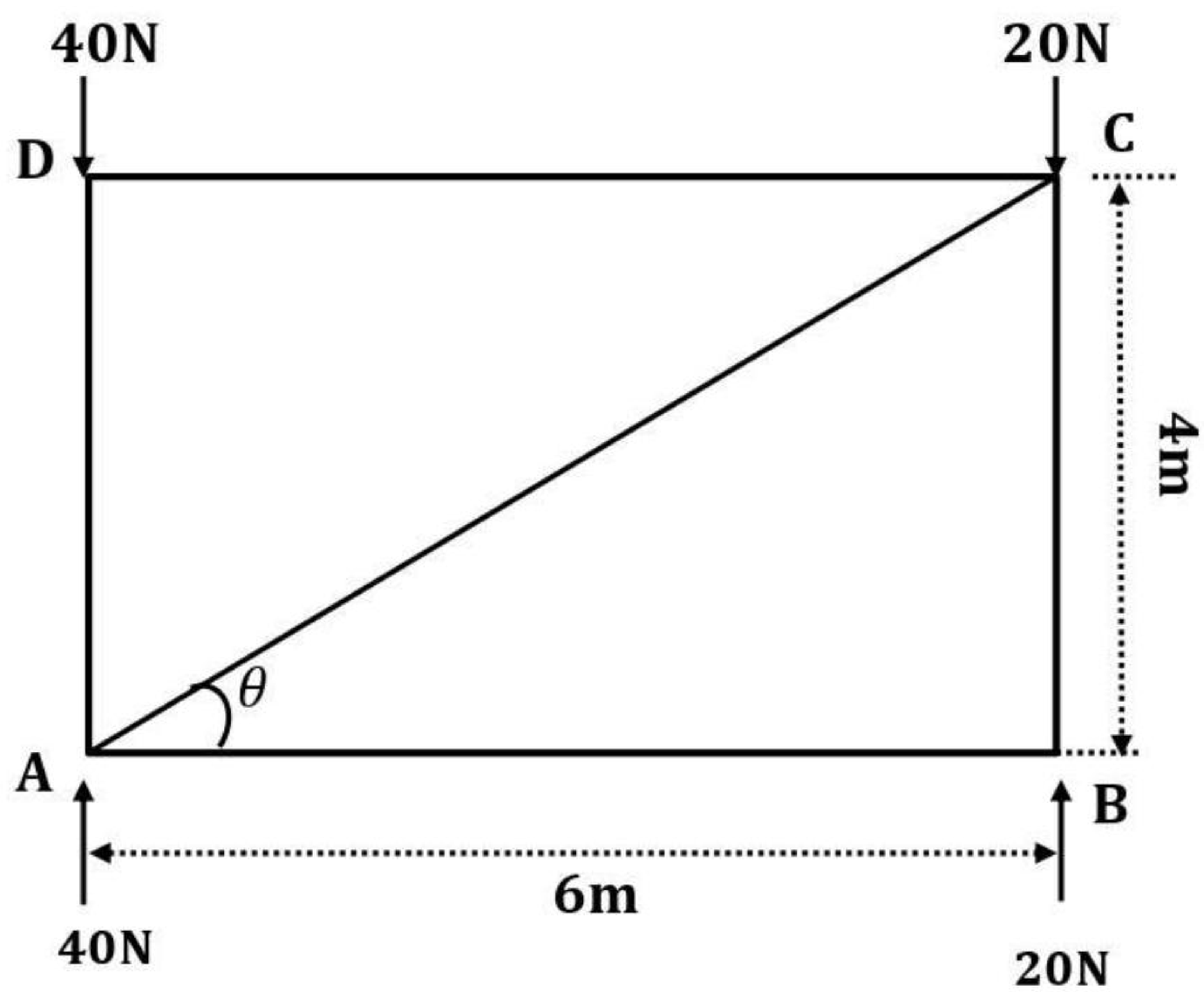

$$\tan\theta = \frac{4}{6}$$

$$\theta = \tan^{-1}\left(\frac{2}{3}\right)$$

$$\theta = 33.69°$$

**Download from www.arjun00.com.np

➢ Analysis Using Method of Joints:

At Joint B

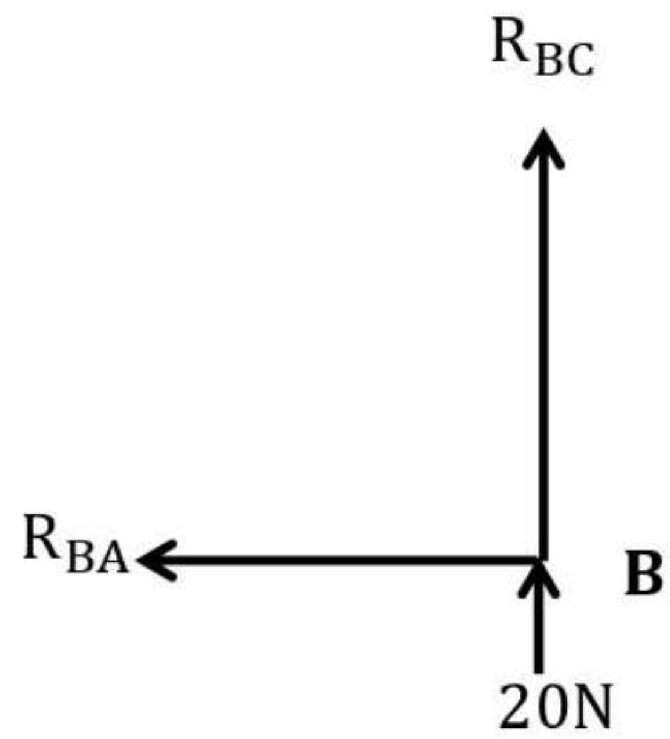

$(\rightarrow) + ve \sum F_X = 0$

$-R_{BA} = 0$

$\therefore R_{BA} = 0$

$(\uparrow) + ve \sum F_Y = 0$

$R_{BC} + 20 = 0 \quad \Longrightarrow R_{AD} = -20\,N$

At Joint A

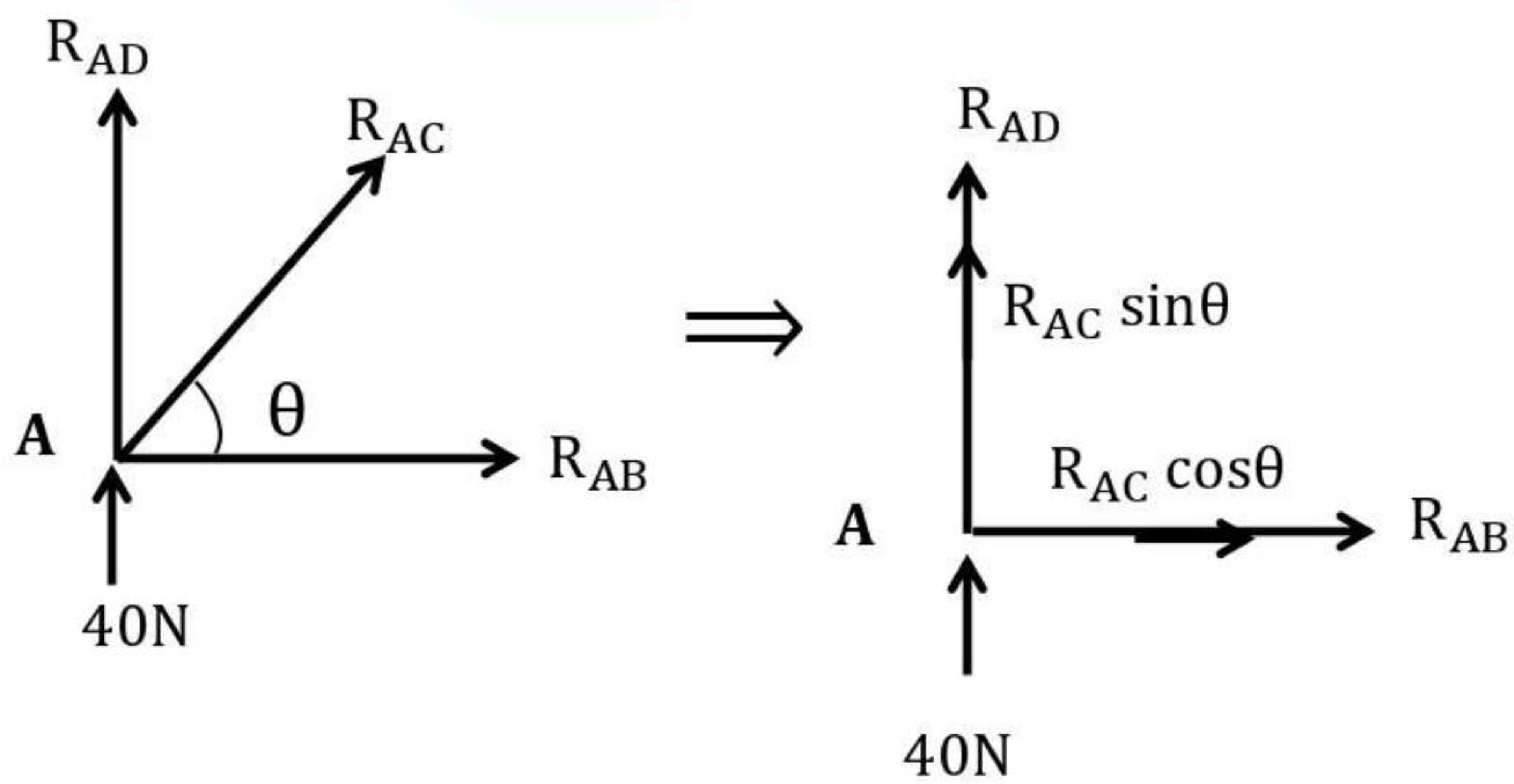

$(\rightarrow) + ve \sum F_X = 0$

$R_{AB} + R_{AC}\text{Cos}\theta = 0$

$0 + R_{AC}\text{Cos}\theta = 0$

$\Longrightarrow R_{AC} = 0\,N$

$(\uparrow) + ve \sum F_Y = 0$

$R_{AD} + 40 + R_{AC}\text{Sin}\theta = 0$

$R_{AD} + 40 + 0.\text{Sin}\theta = 0$

$\Longrightarrow R_{AD} = -40N$

**Download from www.arjun00.com.np

At Joint D

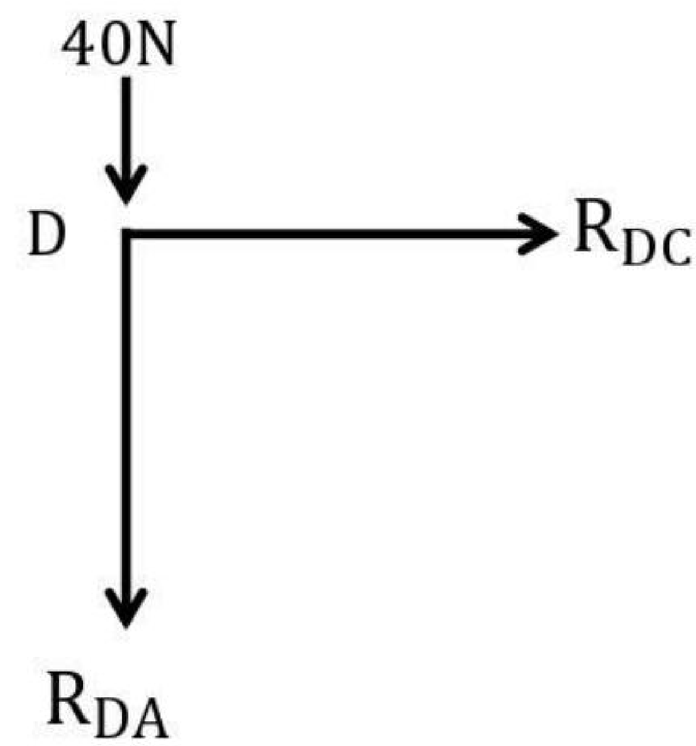

$$(\rightarrow) + ve \sum F_X = 0$$

$$-R_{DC} = 0 \implies R_{DC} = 0\ N$$

For Checking:

$$(\uparrow) + ve \sum F_Y = 0$$

$$-R_{DA} - 40 = 0$$

$$\implies \mathbf{R_{DA} = -40\ N}$$ **(Match)**

Hence,

Member	AB	BC	CD	BD	AD
Member Force(N)	0	20 (C)	0	0	40 (C)

Where, (**C**) indicate the nature of force is **compressive**

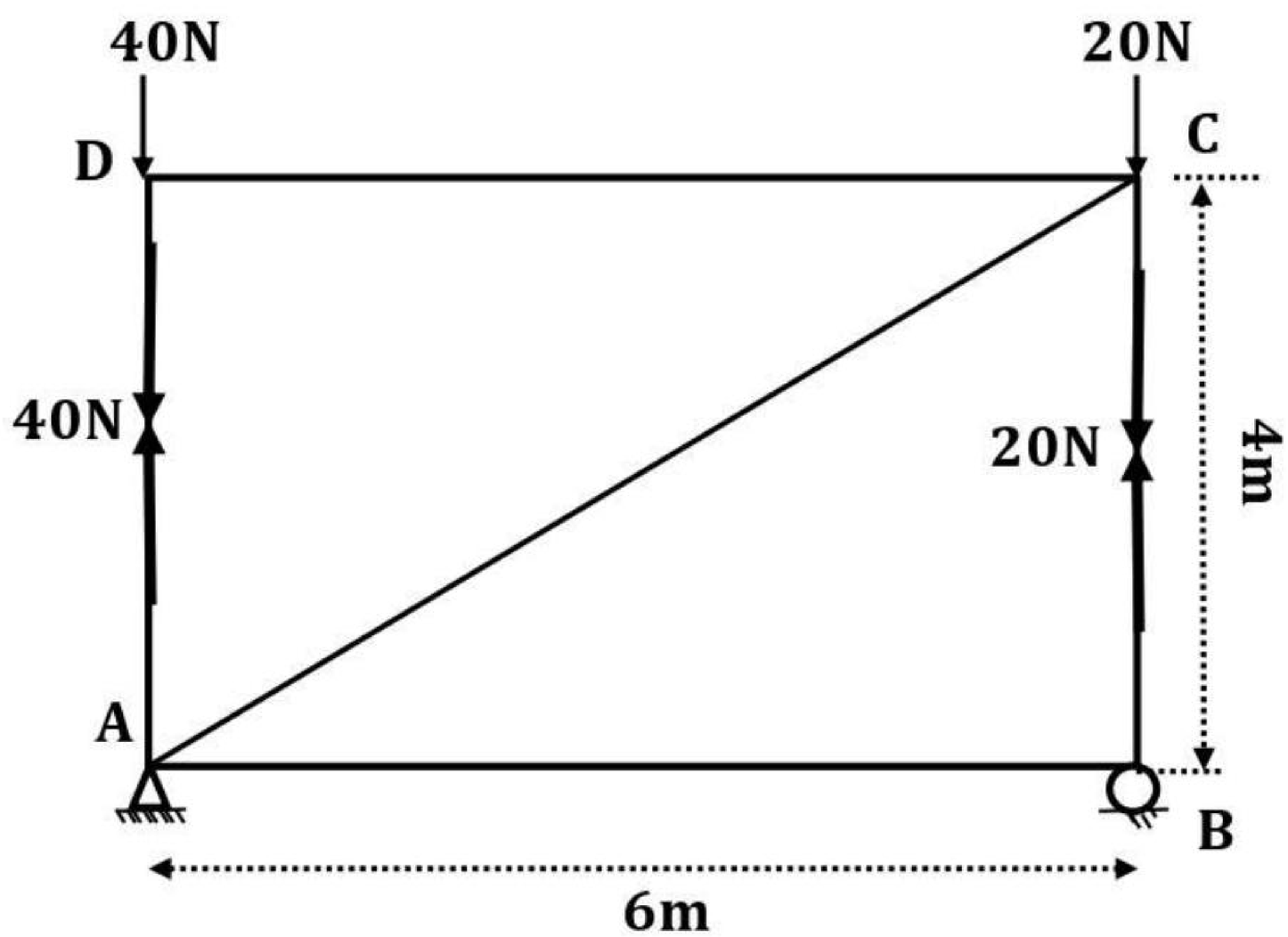

-The End-

**Download from www.arjun00.com.np

Applied Mechanics (Engg. All) 2nd Sem

(New Model Question Solution.)

Compile & written by © Arjun Chy

Website :- www.arjun00.com.np

Facebook :- www.facebook.com/Arjun00.com.np

1. a) Define applied mechanics with its scope in engineering.

➢See the solution of 2079 R/B of Q.no 1 (a) on page.no. 27

b) The following forces act at a point, find the magnitude and direction of resultant force.

i) 25N inclined at 35° towards north of east.

ii) 30N towards north.

iii) 35N inclined at 45° towards north of west.

iv) 40N inclined at 40° towards south of west.

➢See the solution of 2079 R/B of Q.no 1 (b) on page.no. 28

2. a) Write down the steps to draw FBD.

➢ **The steps to draw FBD are :-**

- FBD should have no external supports or connections.
- The self weight (W = mg) should be indicated with vertical downward arrow.
- The reactions from the supports and connections should be indicated.
- The uncut member force should not be shown in FBD.
- Tension in rope or string is directed towards support.
- The adopted coordinate system and sense of unknown force should be shown in FBD.

**Download from www.arjun00.com.np

b) State and prove Lami's Theorem.

➢ See the solution of 2079 R/B of Q.no 2 (b) on page.no. 30

c) A roller of weight 500N rests on smooth inclined plane and is kept free from rolling down by a string as shown in figure aside. Find out the tension in the string and reaction at contact point B.

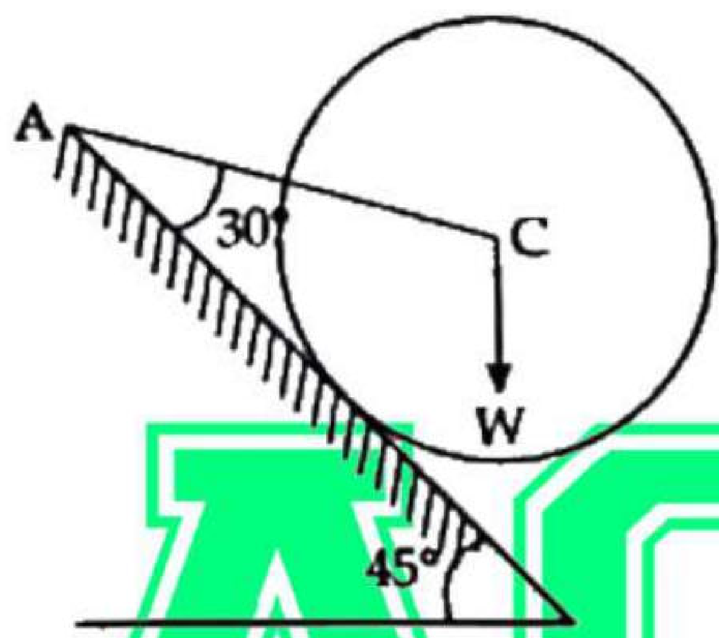

➢ **Solution,**

Given that;

Weight of roller (W) = 500 N

The remaining angles are determined by geometrically free body diagram is also shown in the figure below.

Now, applying Lami's theorem in free body diagram; we have,

$$\frac{F_{AC}}{\sin 45^\circ} = \frac{F_{BC}}{\sin 225^\circ} = \frac{W}{\sin 60^\circ}$$

Taking first and last; we get,

$$F_{AC} = \frac{500}{\sin 60^\circ} \times \sin 45^\circ = 408.248 \text{ N}$$

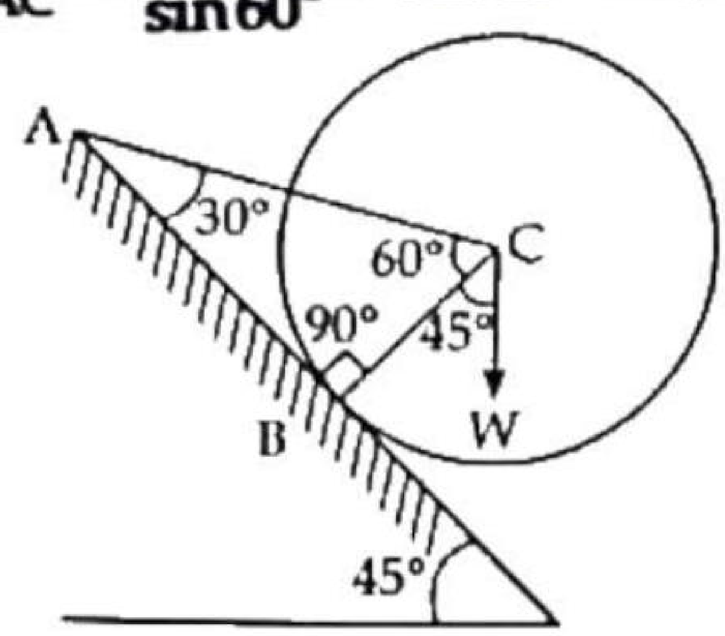

Figure: Roller

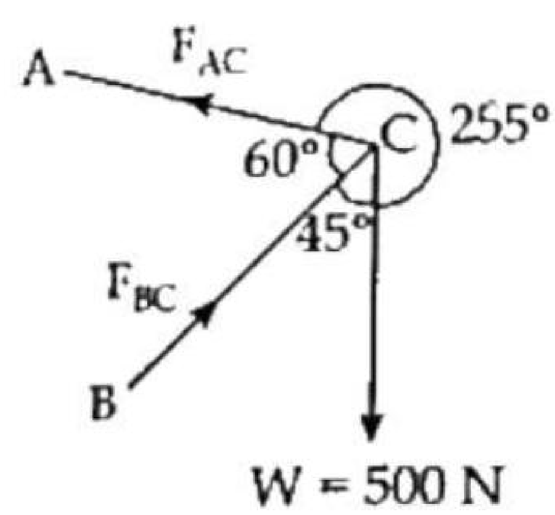

Figure: Free body diagram

**Download from www.arjun00.com.np

Similarly, taking second and third; we get,

$$F_{BC} = \frac{500}{\sin 60^\circ} \times \sin 225^\circ = 557.677 \text{ N}$$

Hence,

Tension in the string (F_{AC}) = 408.248 N

and, Reaction at the point of contact (F_{BC}) = 557.677 N

3. a) Write down the laws of friction.

➢The laws of friction are as follows;

- The force of static friction always acts in a direction, opposite to that in which the body tends to move.
- The magnitude of the force of friction is exactly equal to the force, which tends to move the body.
- The magnitude of the following friction bears a constant ratio, to the normal reaction between the two surfaces.

i. e., $\frac{F}{R}$ = Constant

$\therefore \quad \frac{F}{R} = \mu;$

Where, μ is the coefficient of friction.

F is the limiting friction.

R is the normal reaction.

- The force of friction is depends upon the roughness of the surfaces.
- The force of friction is independent of the area of the contact between two surfaces.

**Download from www.arjun00.com.np

b) A body (Car) of weights 150N is pulled up on a rough inclined plane whose inclination to the horizontal plane is 30° by force of 100N being applied parallel to inclined plane. Calculate the angle of friction.

- **Solution,**

Given that;

Weight of body (W) = 150 N

Angle of inclination (θ) = 30°

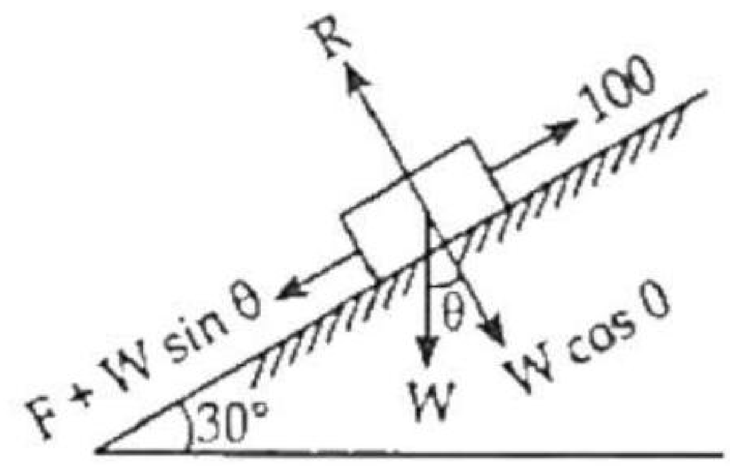

Let, 'R' be the normal reaction, μ be the coefficient of the friction and θ be an angle of inclination of plane.

We know that;

$$\text{Frictional force (F)} = \mu R = \mu W \cos\theta = \mu \times 150 \cos 30° \quad (1)$$

Again, we have from figure;

$$F + W\sin\theta = 100$$

$$F + 150\sin 30° = 100$$

or, $\mu \times 150\cos 30° + 150\sin 30° = 100$ [From equation (1)]

or, $\mu \times 150\cos 30° = 100 - 150\sin 30°$

$$\text{or, } \mu = \frac{100 - 150\sin 30°}{150\cos 30°}$$

Coefficient of friction (μ) = 0.192

∴ angle of friction $(\phi) = \tan^{-1}(0.192) = 10.86°$

4. Locate the centroid of the area shown with respect to the given reference axis.

**Download from www.arjun00.com.np

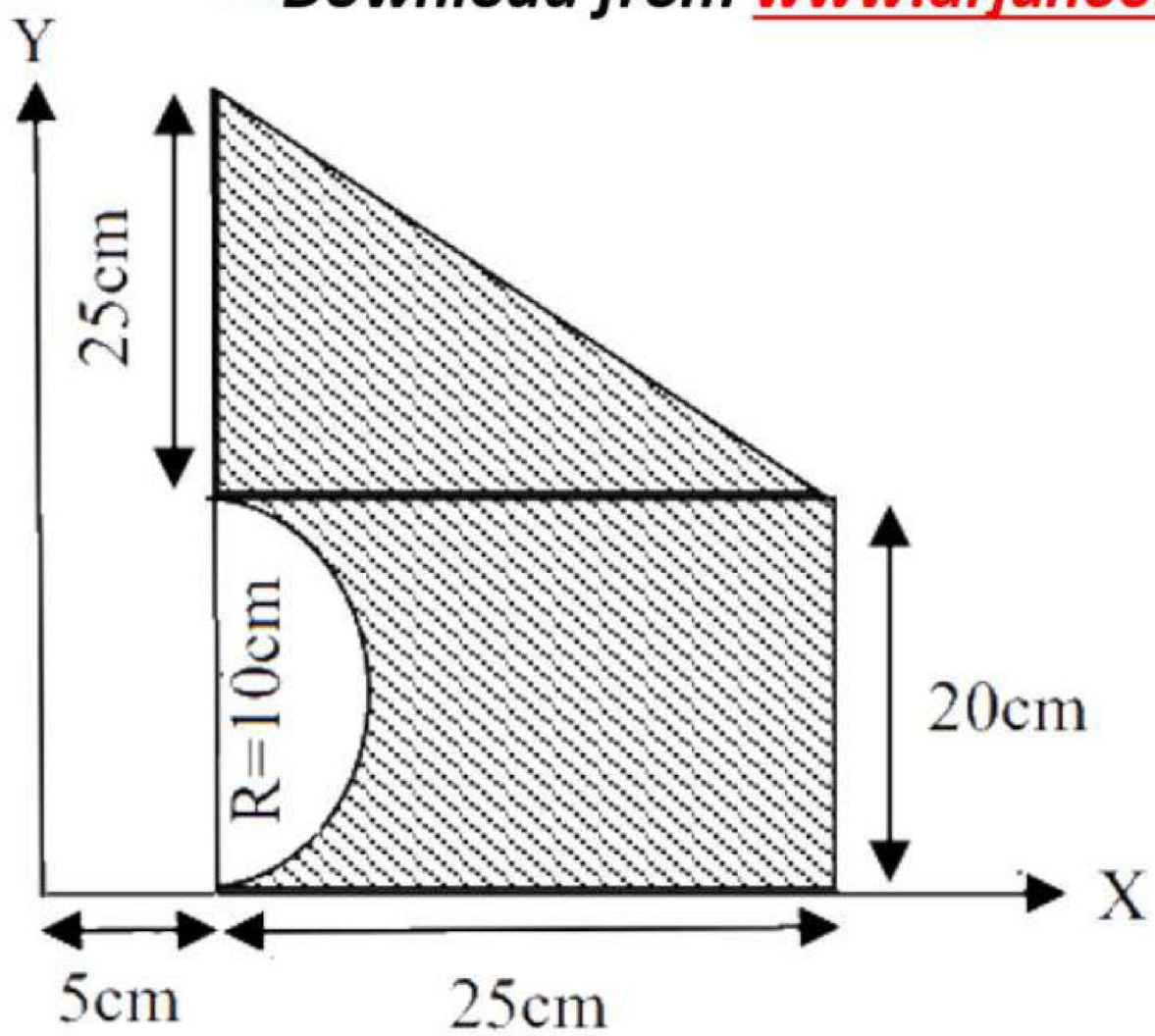

➢ Solution:

To determine the centroid of the area shown we divide the composite figure into three parts as shown for simplicity.

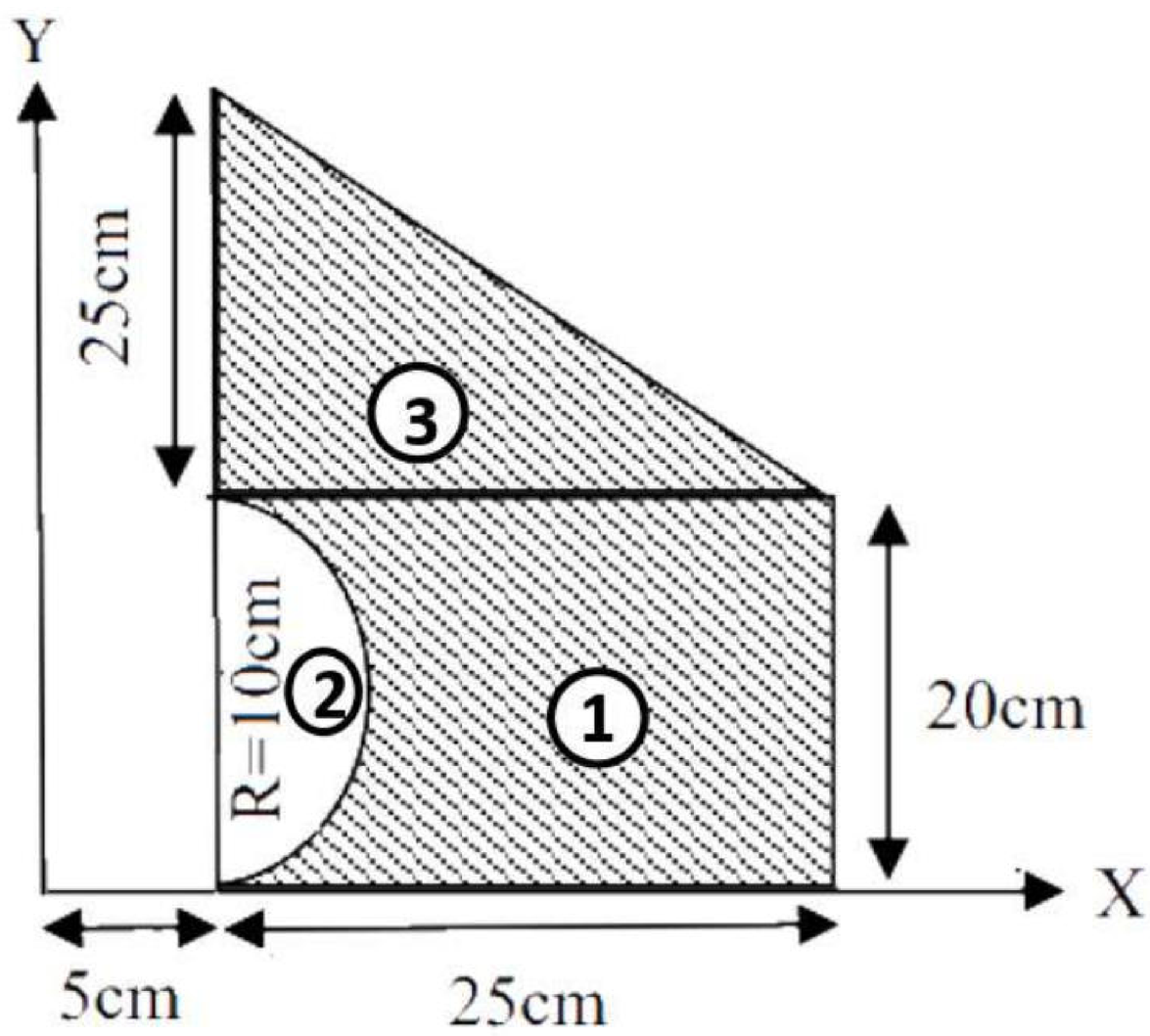

**Download from www.arjun00.com.np

We know,

$$\bar{x} = \frac{a_1x_1 - a_2x_2 + a_3x_3}{a_1 - a_2 + a_3}$$

$$= \frac{(25 \times 20)\left(5 + \frac{25}{2}\right) - \left\{\frac{\pi(10)^2}{2}\right\}\left\{5 + \frac{4(10)}{3\pi}\right\} + \left(\frac{1}{2} \times 25 \times 25\right)\left(5 + \frac{25}{3}\right)}{(25 \times 20) - \left\{\frac{\pi(10)^2}{2}\right\} + \left(\frac{1}{2} \times 25 \times 25\right)}$$

$$= \frac{8750 - (1452.06) + 4166.66}{500 - 157.08 + 312.5} = \frac{11464.66}{655.42} = 17.49 \text{ cm}$$

$$\bar{y} = \frac{a_1y_1 - a_2y_2 + a_3y_3}{a_1 + a_2 + a_3} = \frac{500(10) - 157.08(10) + 312.5\left(20 + \frac{25}{3}\right)}{655.42}$$

$$= \frac{5000 - 157.08 + 8854.16}{655.42} = 18.74 \text{ cm}$$

Hence,

Centroid $(\bar{x}, \bar{y}) = (17.49, 18.74)$ cm

5. a) State parallel axis theorem.

- It states that "the moment of inertia of a plane area about any axis parallel to the centroidal axis is equal to the sum of moment of inertia about a parallel centroidal axis and the product of area and square of the distance between them ($i.e.$, to areas)." Mathematically;

$$I_{00} = I_{XX} + A\bar{y}^2$$

b) Prove that MOI inertia of triangle about centroidal X-X axis is $\frac{bh^3}{36}$, where b is the breadth of triangle and h is the height of triangle.

**Download from www.arjun00.com.np

➢ Solution:-

Let us consider a triangle as shown in the figure with the assumed reference axes. Let 'b' be its base and 'h' be its height from base to the vertex. Now, consider a strip of width dy at a distance of 'y' from base.

From similar triangles OAB and ACD; we have,

$$\frac{x}{b} = \frac{(h-y)}{h}$$

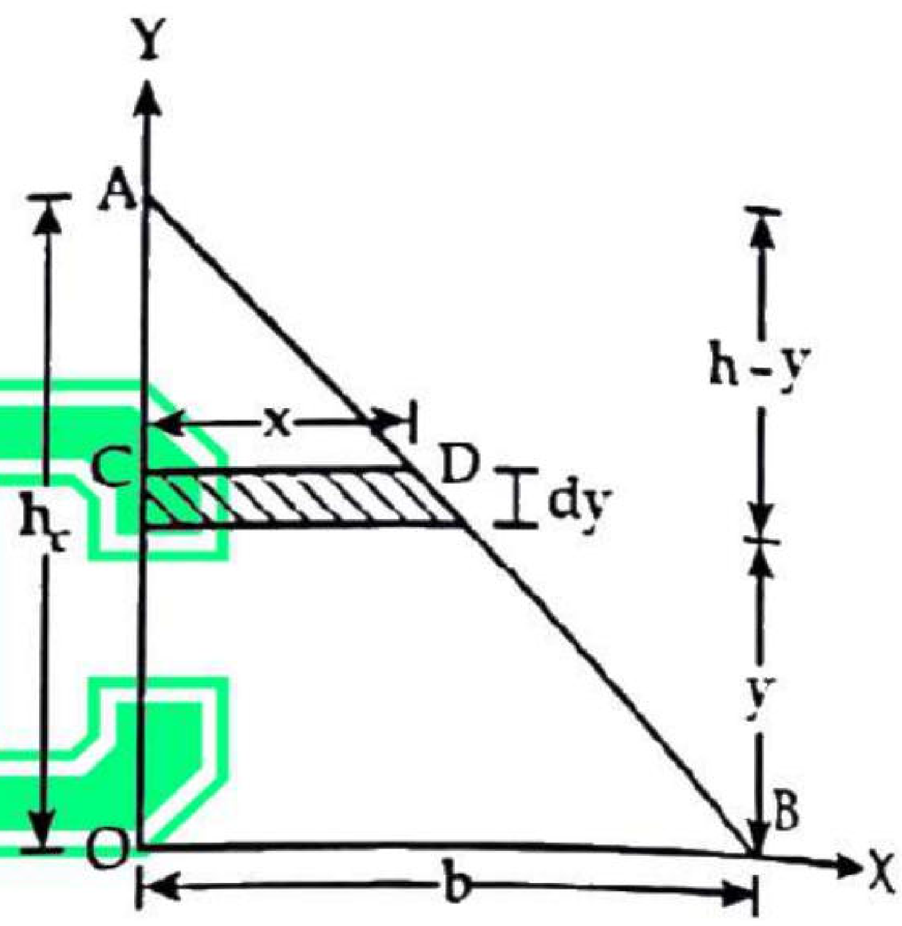

or, $x = \frac{b(h-y)}{h}$

M.I. of the strip about the base (x) = dAy_s^2

and, $dI_x = dAy_s^2 = \frac{b(h-y)}{h} dy \times y^2$

M.I. of whole area about base;

$$I_{base} = \int dI_x = \frac{b}{h}\int (h-y)y^2 dy$$

$$= \frac{b}{h}\left[\int_0^h hy^2 - y^3 dy\right] = \frac{b}{h}\left[\frac{hy^3}{3} - \frac{y^4}{4}\right]_0^h = \frac{b}{h}\left[\frac{h^4}{3} - \frac{h^4}{4}\right] = \frac{bh^3}{12}$$

M.I. about base = $\frac{bh^3}{12}$

According to parallel axis theorem; we have,

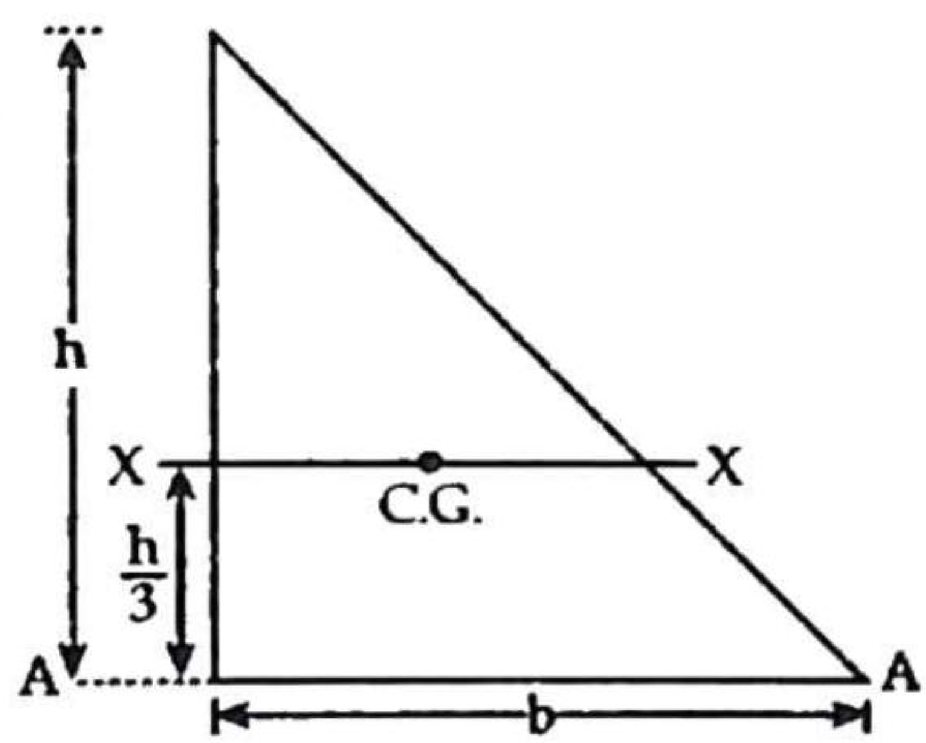

$$I_{base} = I_{XX} + AX\left(\frac{h}{3}\right)^2$$

or, $I_{XX} = I_{base} - \frac{Ah^2}{9}$

$$= \frac{bh^3}{12} - \frac{1}{2} \times b \times h \times \frac{h^2}{9}$$

**Download from www.arjun00.com.np

$$= \frac{bh^3}{12} - \frac{bh^3}{18}$$
$$= \frac{bh^3}{36}$$

or) Find the moment of inertia about the centroidal X-axis of the figure shown below.

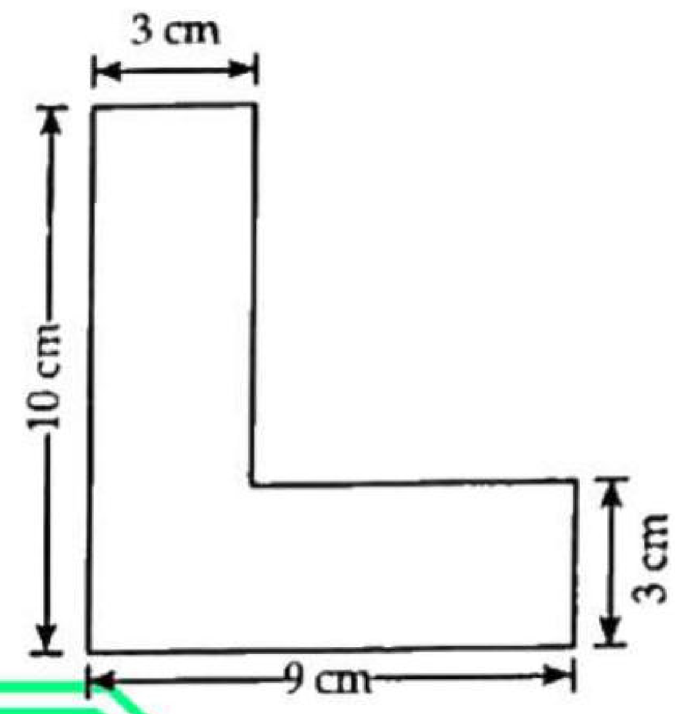

➢ **Solution:**

Let us divide the composite figure into two parts for simplicity and let the axis be as shown in the figure.

Now, finding centroid; we get,

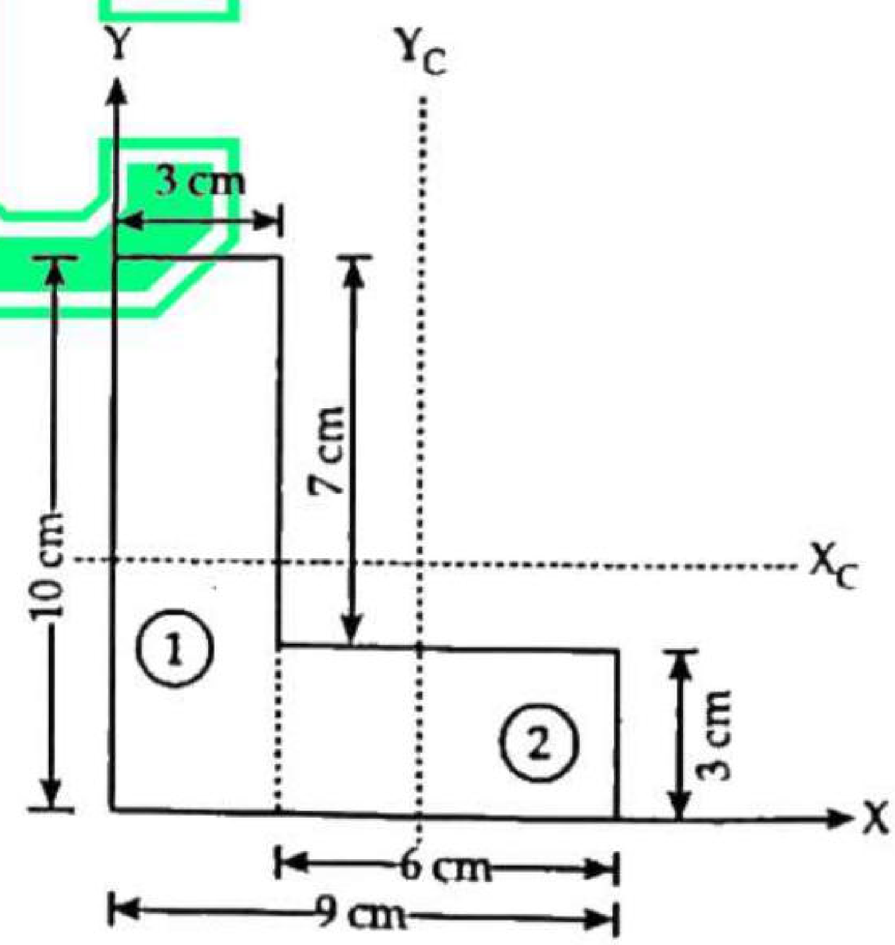

$$y_1 = \frac{10}{2} = 5$$
$$y_2 = \frac{3}{2} = 1.5$$

$$\bar{y} = \frac{a_1y_1 + a_2y_2}{a_1 + a_2}$$
$$= \frac{(10 \times 3)(5) + (6 \times 3)(1.5)}{30 + 18}$$
$$= \frac{150 + 27}{48}$$
$$= 3.68 \text{ cm}$$

Now, for moment of inertia;

$$I_{XX} = (I_{C.G._1})_X + A_1h_1^2 + (I_{C.G._2})_X + A_2h_2^2$$
$$= \frac{b_1d_1^3}{12} + b_1d_1(\bar{y} - y_1)^2 + \frac{b_2d_2^3}{12} + b_2d_2(\bar{y} - y_2)^2$$
$$= \frac{3(10)^3}{12} + (3 \times 10)(3.68 - 5)^2 + \frac{6(3)^3}{12} + (6 \times 3)(3.68 - 1.5)^2$$
$$= 250 + 52.272 + 13.5 + 85.5432$$
$$= 401.31 \text{ cm}^4$$

**Download from www.arjun00.com.np

6. Find the support reaction and draw SFD and BMD.

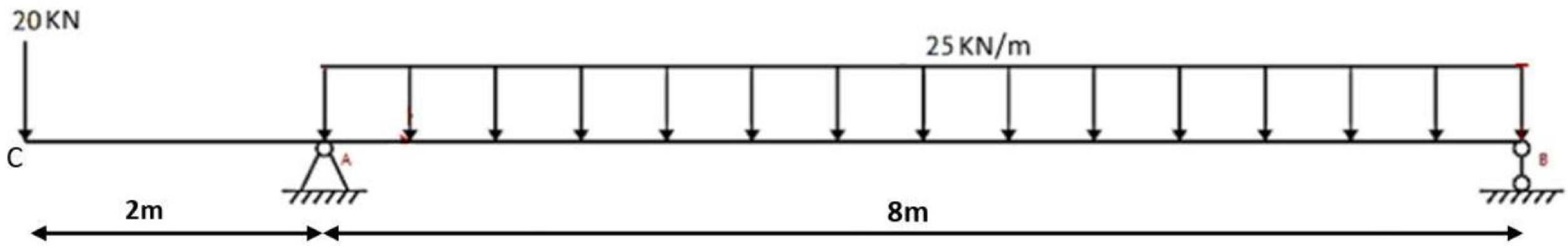

➢ Solution:

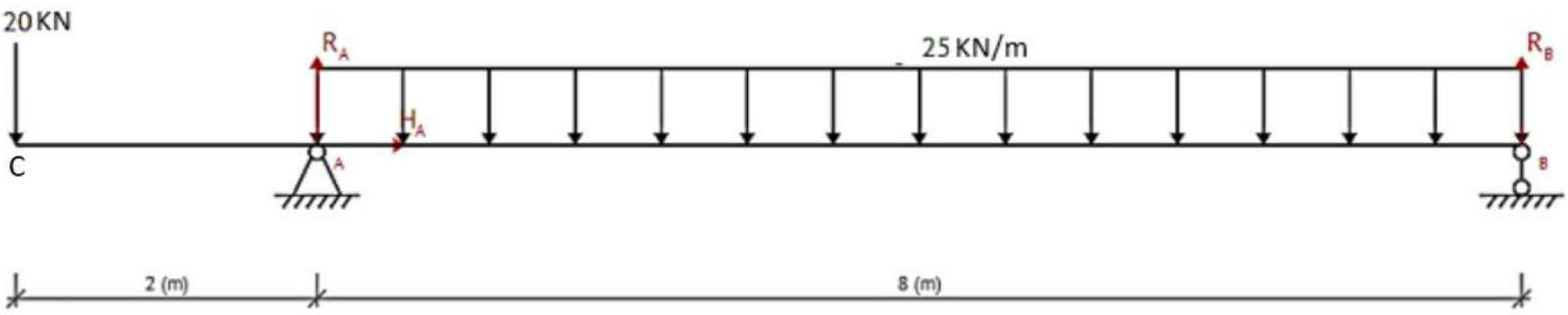

Let H_A & R_A be the horizontal reactions & Vertical reactions at support A. Let, R_B be the reaction at support B.

$$(\rightarrow) + ve \sum F_X = 0$$

$$\therefore H_A = 0$$

Taking moment at B ; we get,

$$(+\circlearrowleft) \sum M_B = 0$$

or, $20 \times 10 - R_{AY} \times 8 + 25 \times 8 \times (\frac{8}{2}) = 0$

or, $R_A = \frac{1000}{8}$

$\therefore \mathbf{R_A = 125\ kN}\ (\uparrow)$

**Download from www.arjun00.com.np

and $\uparrow (+ve) \sum F_y = 0$

or, $R_A + R_B - 25 \times 8 - 20 = 0$

or, $R_B = 220 - 125$

$\therefore \mathbf{R_B = 95\ kN}\ (\uparrow)$

F.B.D.

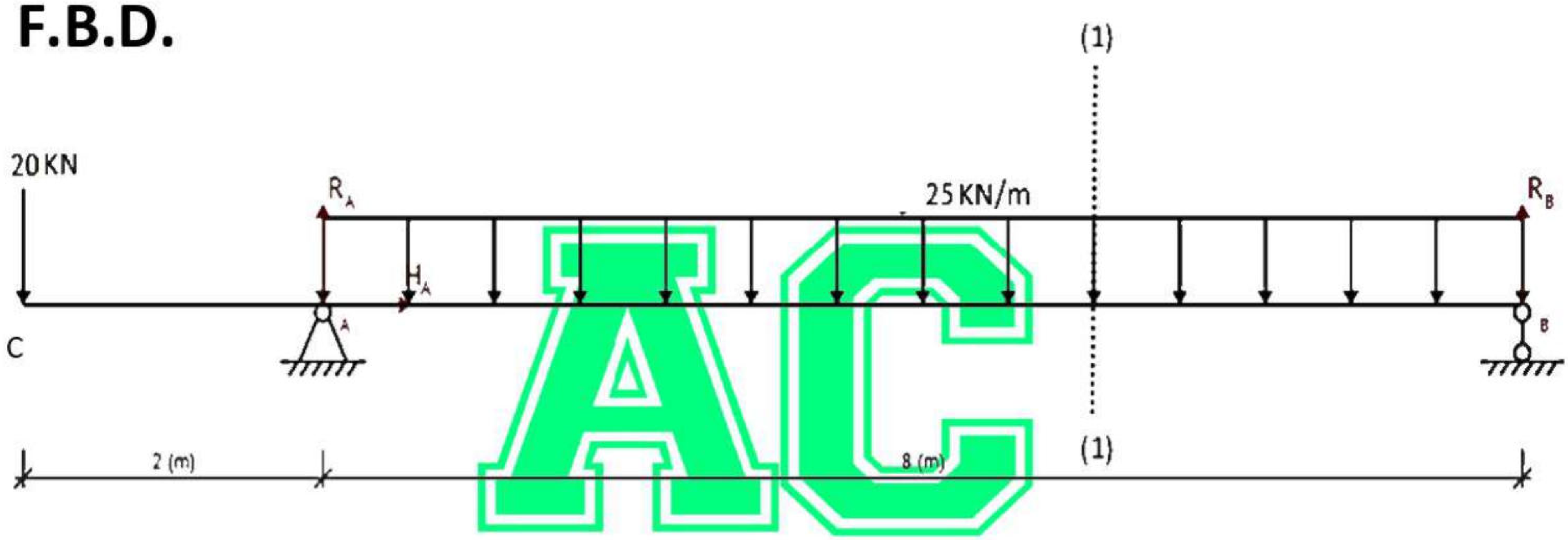

➢ Calculation Of Shear Force and Bending Moment

For member AB:

Taking the right part of section (1)-(1)from x distance from B,

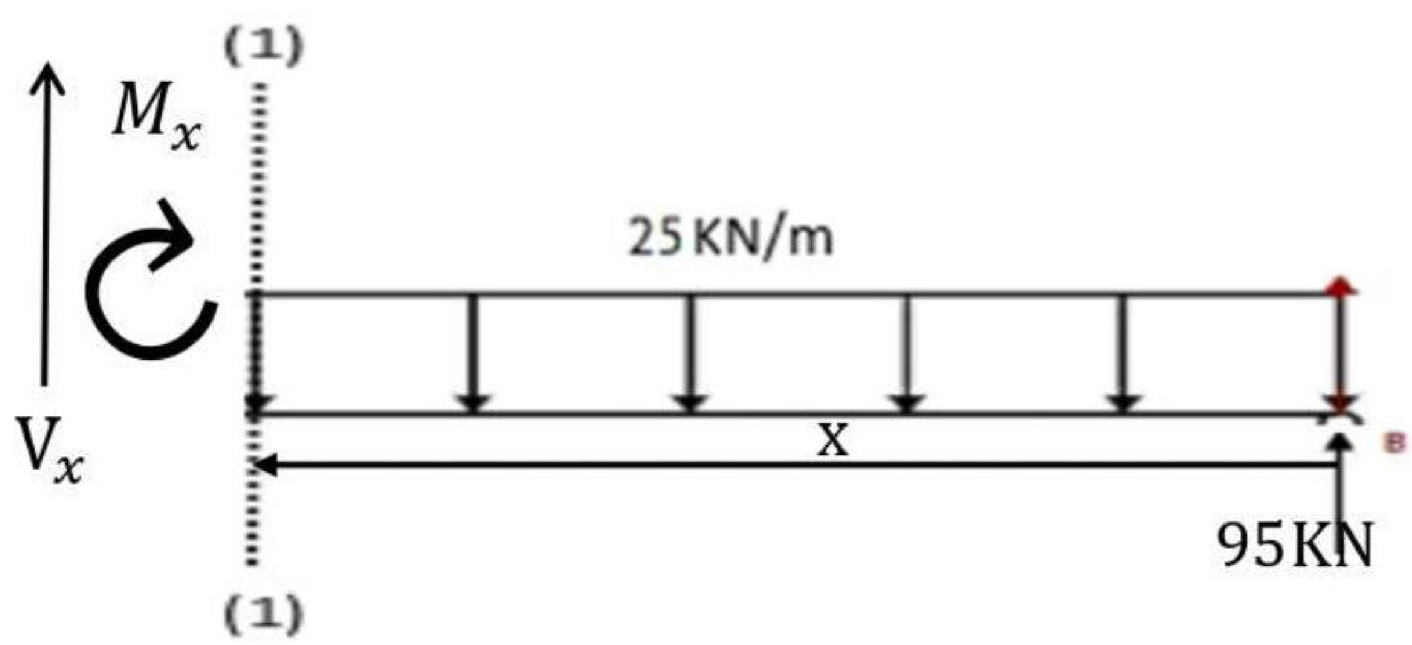

**Download from www.arjun00.com.np

$(\uparrow\ +\text{ve}) \sum F_y = 0,$

$95 + V_x - 25x = 0$

Or, $V_x = 25x - 95 \qquad [\, x \in (0,8)\ ]$

At $x = 0, V_B = -95$ KN

At $x = 4, V_x = 25 \times 4 - 95 = 5$ KN

At $x = 8, V_A = 25 \times 8 - 95 = 105$ KN

Points Where SFD is Zero;

$25x - 95 = 0$

$\therefore \boldsymbol{x = 3.8m\ From\ B}$

And,

$(+\circlearrowleft) \sum M_x = 0$

$-M_x - 25x \times \frac{x}{2} + 95x = 0$

$M_x = 12.5x^2 - 95x$

At $x = 0, M_x = \mathbf{M_B} = 0$

At $x = 4, M_x = 12.5 \times 4^2 - 95 \times 4 = 180$ KNm

At $x = 8, M_x = \mathbf{M_A} = 12.5 \times 8^2 - 95 \times 8 = -40$ KNm

At $\mathbf{x = 3.8}, M_x = 12.5 \times 3.8^2 - 95 \times (3.8) = \mathbf{180.5\ KNm}$

Points Where BMD is Zero;

$12.5x^2 - 95x = 0$

$x(12.5x - 95) = 0$

$\therefore \boldsymbol{x = 7.6m\ From\ B}$

**Download from www.arjun00.com.np

For member CA: Shear Force

$C_L = 0KN$

$C_R = -20KN$

$A_L = -20 = -20KN$

$C_R = -20 + 125 = 105KN$

Bending Moment ; From right to Left

$M_C = 125 \times 2 - 25 \times 8 \times (2 + 4) + 95 \times 10 = 0KNm$

The SFD and BMD are:

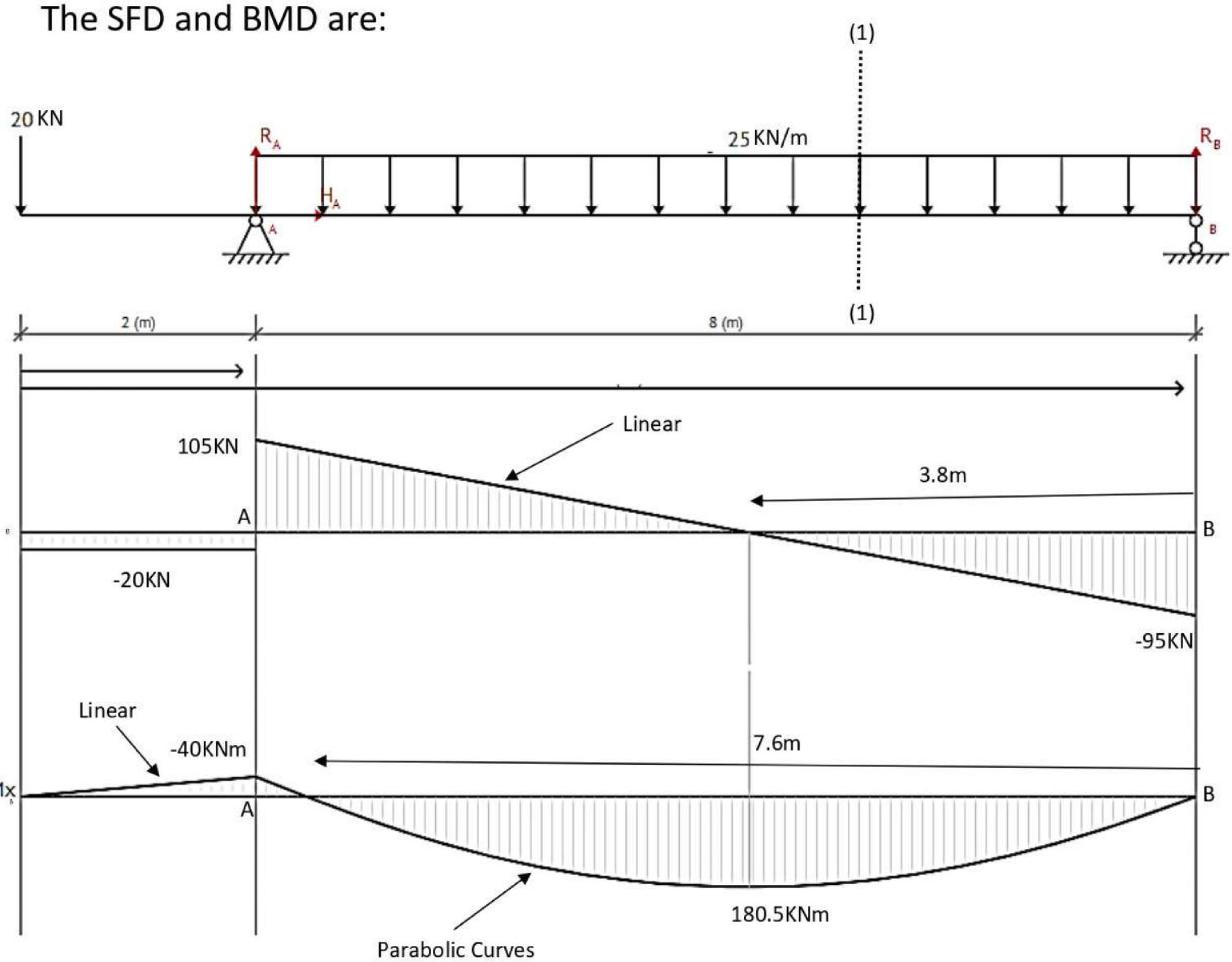

**Download from www.arjun00.com.np

7. Determine the forces in each member of truss as shown in the figure and state whether it is tension or compression.

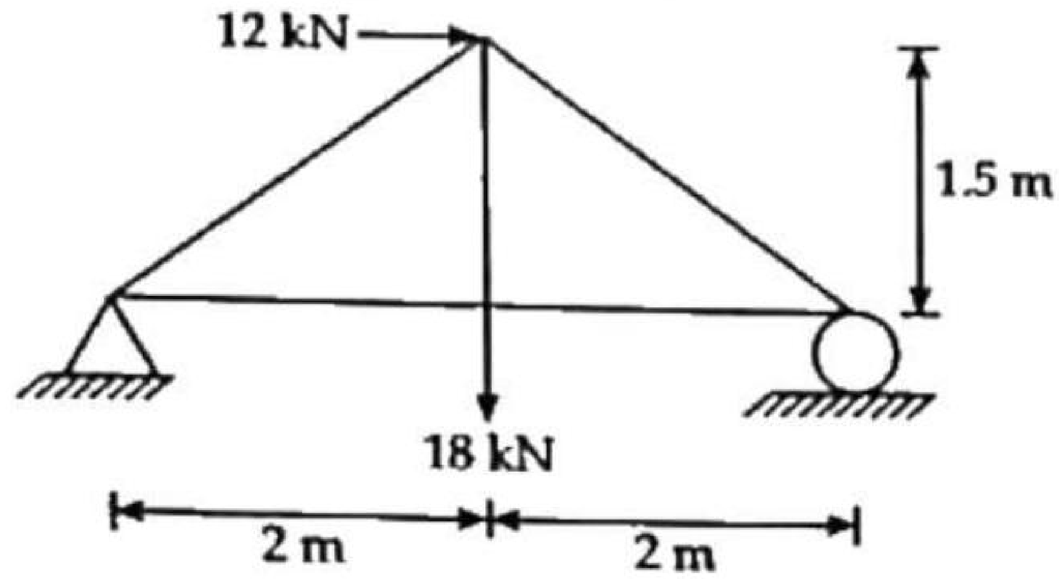

➢ **Solution:**

Let us first calculate the reactions at supports.

$R_{Ay} \times 4 = 18 \times 2 + 12 \times 1.5$

$\therefore \quad R_{Ay} = 4.5\ kN\ (\uparrow)$

$R_{By} = 18 - 4.5 = 13.5\ kN\ (\uparrow)$

and, $R_{Ax} = 12\ kN\ (\leftarrow)$

Now, using joint method to calculate member forces;

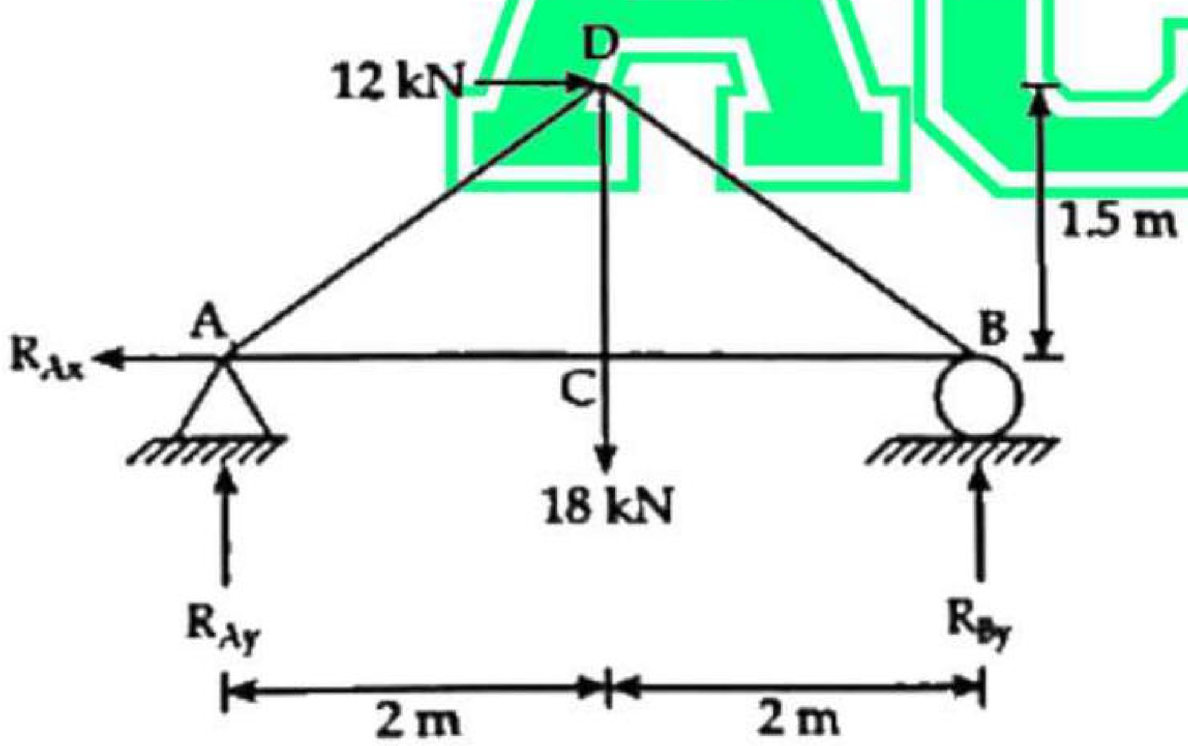

Joint A

$$\sum F_y = 0$$

or, $R_{AD} \sin 36.87° + 4.5 = 0$

or, $R_{AD} = -7.5\ kN$

$\therefore \quad R_{AD} = 7.5\ kN\ (C)$

$\sum F_x = 0$

or, $R_{AC} + R_{AD} \cos 36.87° - 12 = 0$

$\therefore \quad R_{AC} = 18\ kN\ (T)$

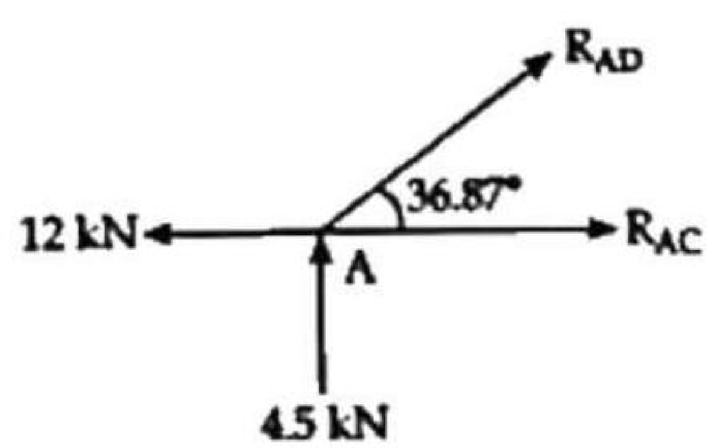

Figure: Joint A

**Download from www.arjun00.com.np

Joint C

$$\sum F_y = 0$$

or, $R_{CD} = 18\text{ kN (T)}$

$$\sum F_x = 0$$

or, $R_{AC} = R_{BC} = 18\text{ kN (T)}$

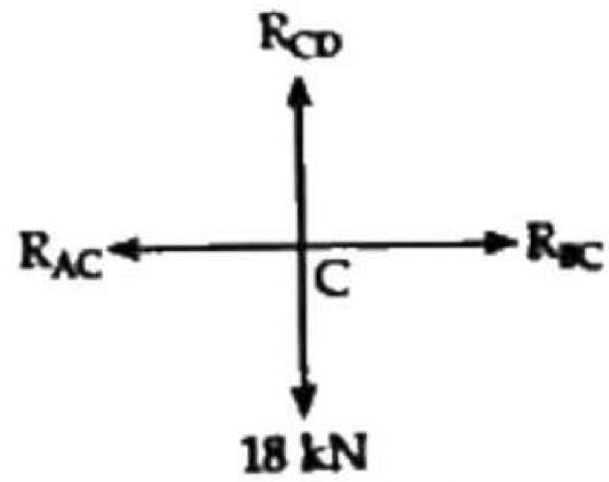

Figure: Joint C

Joint B

$$\sum F_y = 0$$

or, $R_{BD} \sin 36.87° + 13.5 = 0$

$\therefore$ $R_{BD} = -22.5\text{ kN} = 22.5\text{ kN (C)}$

Hence,

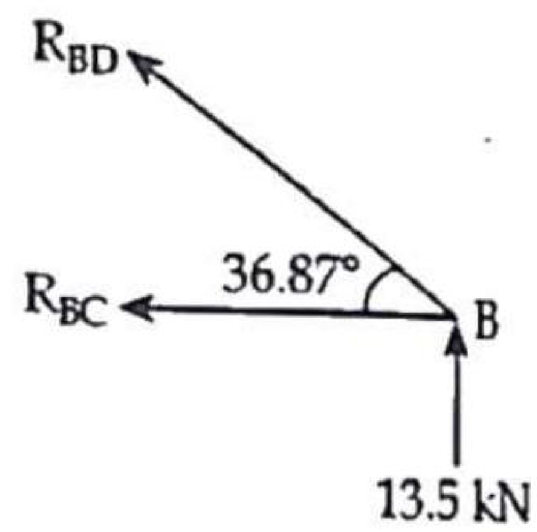

Figure: Joint B

Member	AD	AC	CD	BC	BD
Force (kN)	7.5	18	18	18	22.5
Nature	C	T	T	T	C

-The End-

This Solution is for Educational Purpose Only. If you misuse it, we are not Responsible.

**Download from www.arjun00.com.np

Applied Mechanics (Engg. All) 3rd Sem

(2080) Back Question Paper Solution.

Compile & written by © Arjun Chy

Website :- www.arjun00.com.np

Facebook :-www.facebook.com/Arjun00.com.np

1.a) Define applied mechanics. Define FBD, equilibrium and equation of static equilibrium.

- **Applied mechanics** also known as engineering mechanics is the branch of engineering which deals with the laws of mechanics as applied to the solution of engineering problems.
- A sketch of the isolated body showing all the forces acting on it by vectors is called a **free body diagram**.
- If the resultant of a number of forces acting on a particle is zero then the particle will be in equilibrium and such a set of forces whose resultant is zero are called equilibrium forces. It means, equilibrium is a condition in which the resultant of a number of forces acting on a particle is zero.
- The equations of static equilibrium :-

  $\sum F_x = 0$, Sum of the forces in the x-direction is 0

  $\sum F_y = 0$, Sum of the forces in the y-direction is 0

  $\sum M = 0$, Sum of rotational forces must be 0

**Download from www.arjun00.com.np

b) The following forces act at a point:

i) 40 N inclined at 40° towards north of east.

ii) 25 N towards north.

iii) 50 N towards north-west.

iv) 60N inclined at 60° towards south of west.

Find the magnitude and direction of the resultant.

➢ The system is shown below in the figure (i):-

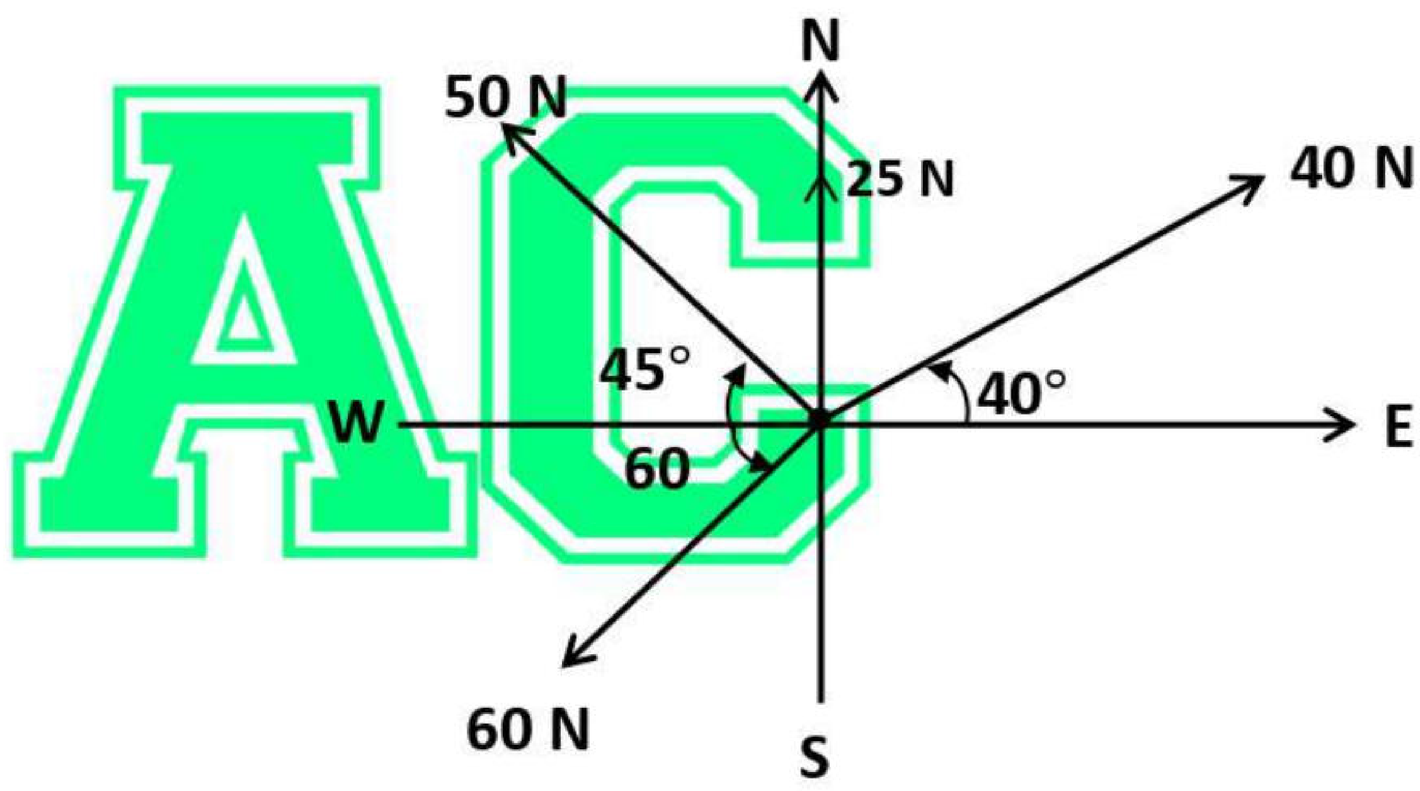

Now,

Resolving all the forces horizontally $i.e.$, East-West line.(x-axis)

$$\sum \mathrm{H} = 40\cos 40° - 50\cos 45° - 60\cos 60°$$
$$= 30.642 - 35.355 - 30$$
$$= \mathbf{-34.713\ N}$$

Resolving all the forces Vertically $i.e.$, North-south line.(y-axis)

$$\sum \mathrm{V} = 25 + 40\sin 40° + 50\sin 45° - 60\sin 60°$$
$$= 25 + 25.712 + 35.355 - 51.962$$
$$= \mathbf{34.105\ N}$$

**Download from www.arjun00.com.np

$$As \sum \mathrm{H} = -ve\ , and \sum \mathrm{V} = +ve \quad i.e. It\ lies\ on\ 2^{nd}\ Quadrant$$

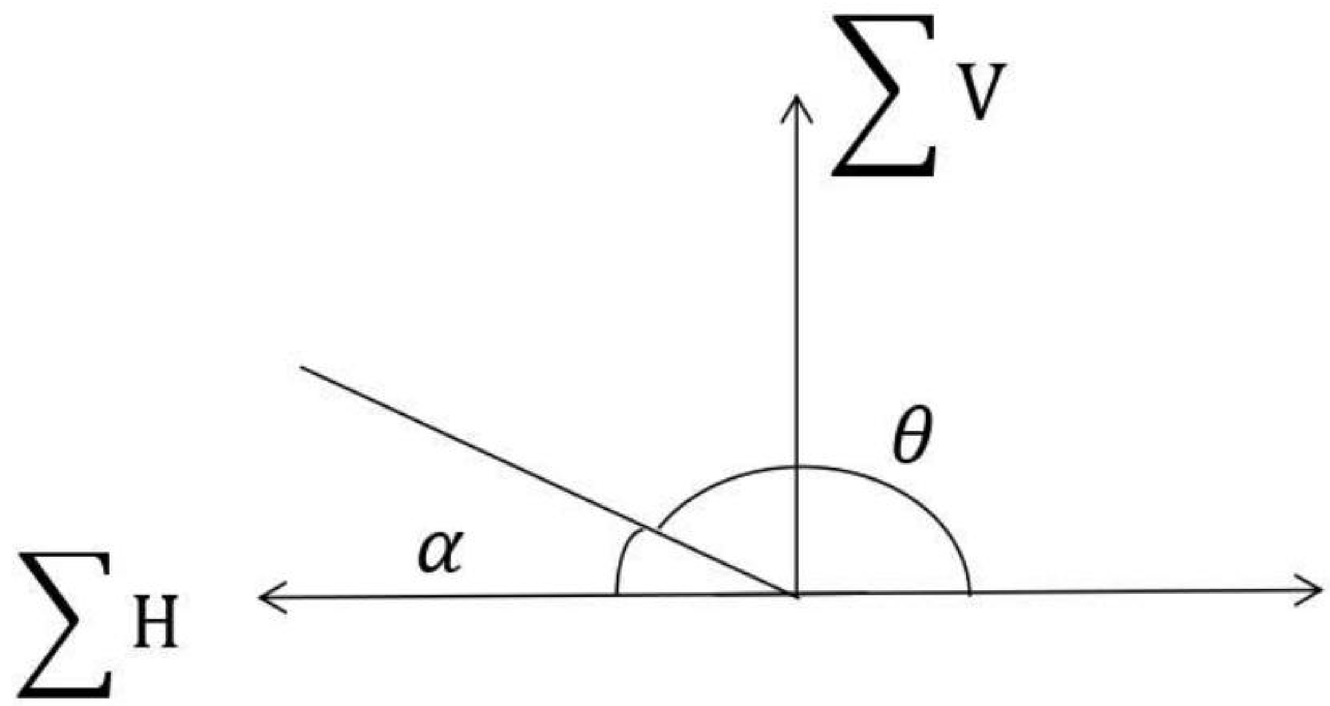

Let "R" be Resultant Force That make θ angles with horizontal

$$R = \sqrt{\left(\sum \mathrm{H}\right)^2 + \left(\sum \mathrm{V}\right)^2}$$

$$= \sqrt{(-34.713)^2 + (34.105)^2}$$

$$= \mathbf{48.664\ N}$$

$$\boldsymbol{\alpha = tan^{-1}\left(\frac{\sum \mathrm{V}}{\sum \mathrm{H}}\right) = tan^{-1}\left(\frac{34.105}{-34.713}\right) = -44.49°}$$

$$\boldsymbol{actual\ \theta = 180 - 44.49 = 135.51°\ \ [from\ fig\ (ii)]}$$

**Download from www.arjun00.com.np

2. a) State and prove Lami's Theorem.

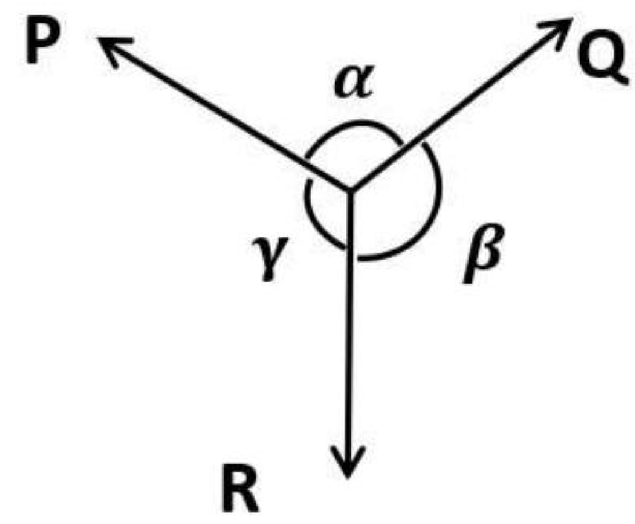

- **Statement**

"If three coplanar forces acting at a point be in equilibrium, then each force is proportional to the sine of the angle between the other two."

Mathematically;

$$\frac{P}{\sin\beta} = \frac{Q}{\sin\gamma} = \frac{R}{\sin\alpha}$$

where, P, Q and R are three forces and β, γ, α are angles as shown in the figure.

Proof

Let us consider three coplanar forces P, Q and R. Let the opposite angles of the three forces be β, γ and α respectively as in the figure.

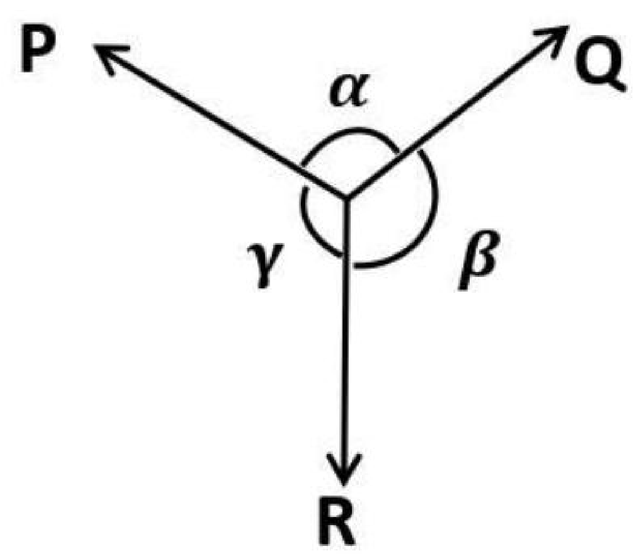

Forming triangle with these forces,

**Download from www.arjun00.com.np

Let angle between Q & R force are 'β' $i.e.$, ∠QOM = 'β'
, angle between P & Q forces are 'α ' $i.e.$, ∠PNO = 'α'
, angle between P & R forces are 'γ' $i.e.$, ∠RMN = 'γ'

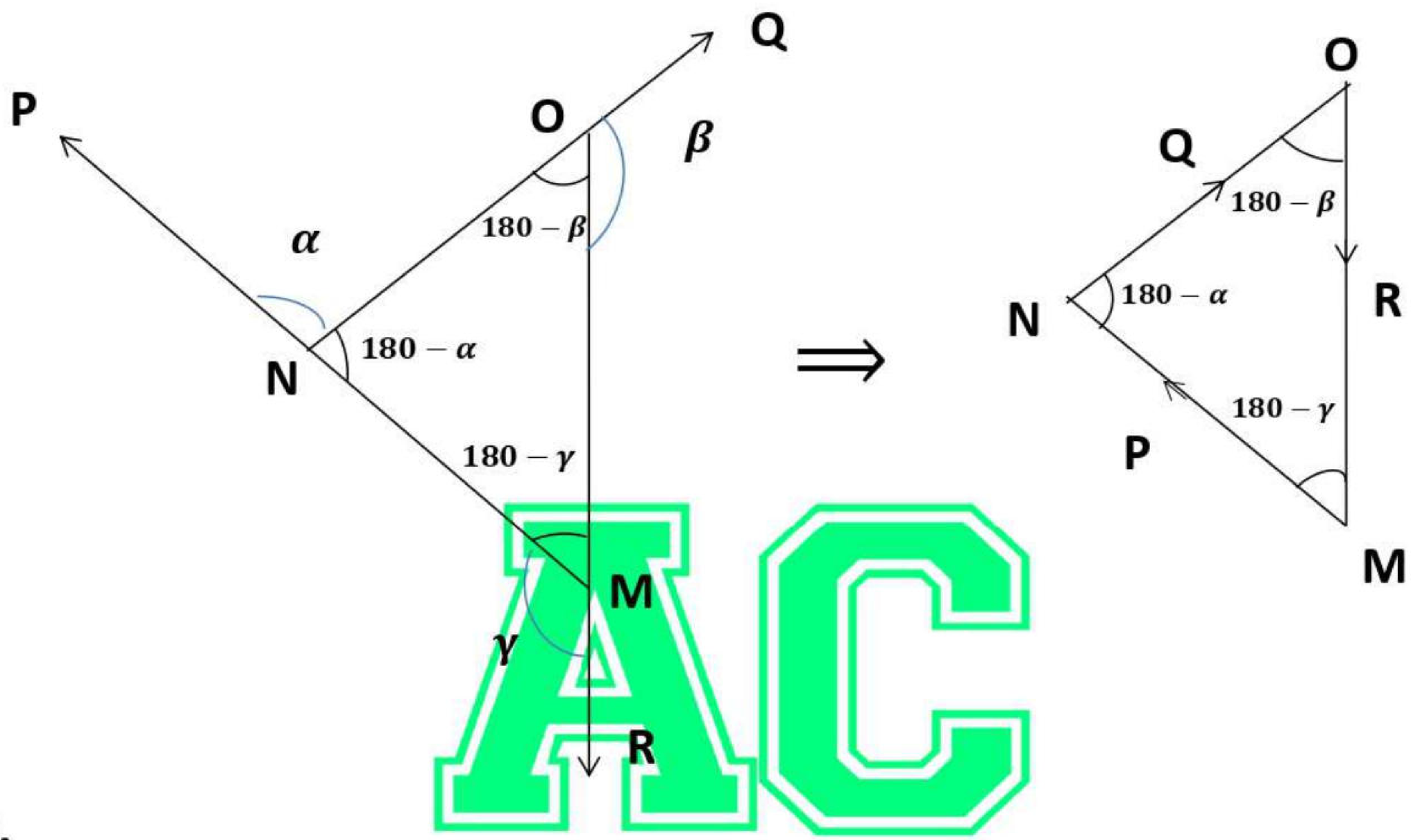

Now,

∠MON = 180 −∠PNO , ∠NMO = 180 −∠RMN , ∠MON = 180 −∠QOM
= 180 − α = 180 − γ = 180 − β

Using Sine law in Δ MON

$$\frac{P}{\sin(\angle MON)} = \frac{Q}{\sin(\angle NMO)} = \frac{R}{\sin(\angle MNO)}$$

$$\frac{P}{\sin(180 - \beta)} = \frac{Q}{\sin(180 - \gamma)} = \frac{R}{\sin(180 - \alpha)}$$

$$\frac{\mathbf{P}}{\sin \boldsymbol{\beta}} = \frac{\mathbf{Q}}{\sin \boldsymbol{\gamma}} = \frac{\mathbf{R}}{\sin \boldsymbol{\alpha}}$$

Proved.

**Download from www.arjun00.com.np

b) Find the centroid of the shaded plane area of given figure:

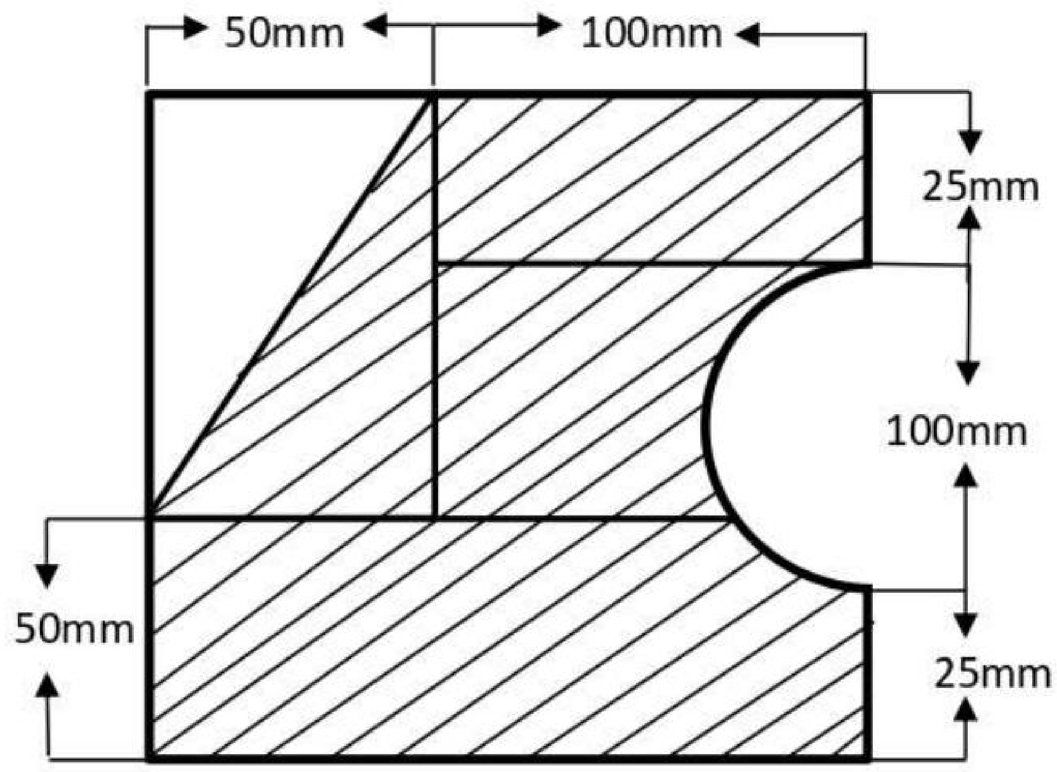

➢ **Here,**

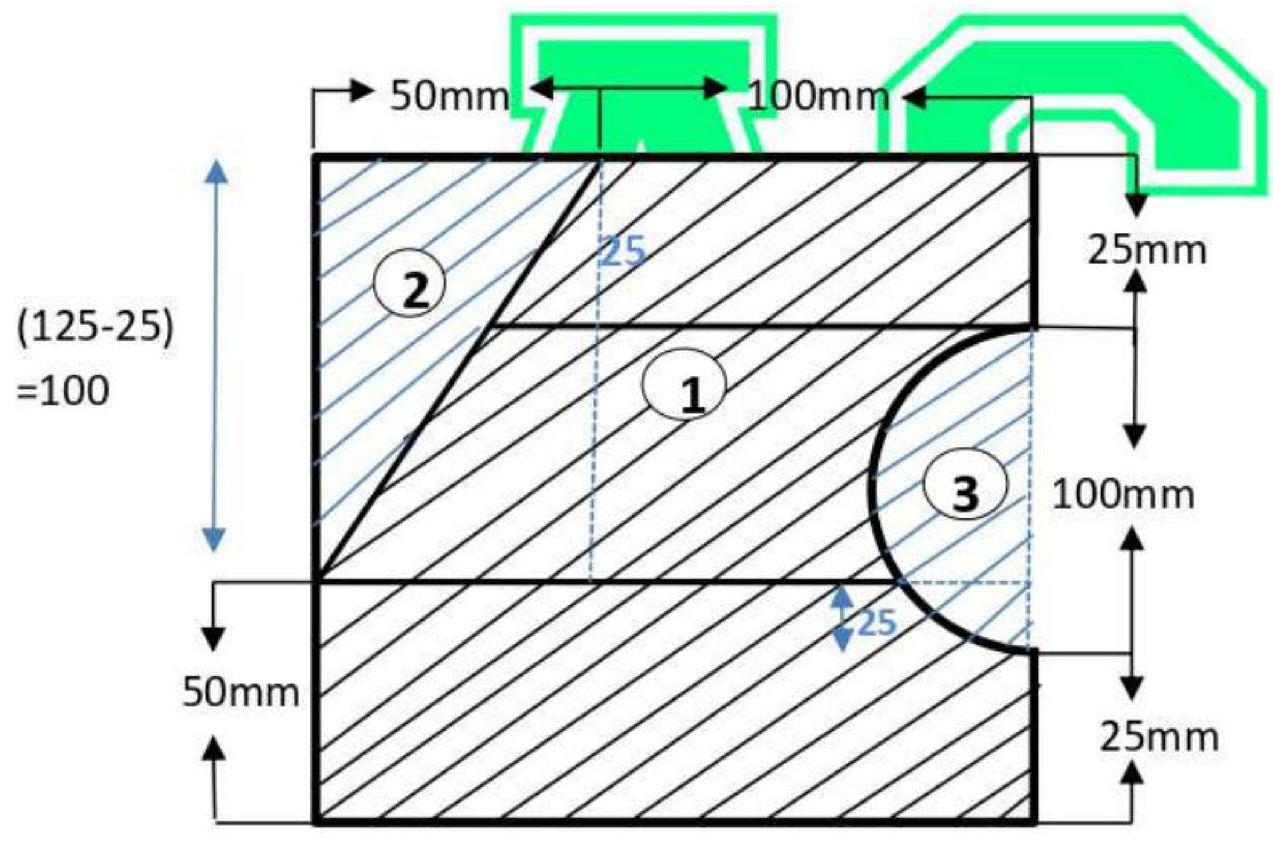

Fig	$\overline{X}$,mm	$\overline{Y}$,mm	Area, mm^2
1(+ve)	$\frac{150}{2} = 75$	$\frac{150}{2} = 75$	$150 \times 150 = 22500$
2(-ve)	$\frac{50}{3} = 16.67$	$50 + \frac{2 \times (100)}{3} = 116.67$	$\frac{1}{2} \times 50 \times 125 = 3125$
3(-ve)	$50+100-\frac{4\times50}{3\pi}=128.78$	$25+\frac{100}{2} = 75$	$\frac{\pi(50)^2}{2} = 3926.99$

**Download from www.arjun00.com.np

$$\overline{\mathbf{X}} = \frac{\sum AX}{\sum A} = \frac{A_1X_1 - A_2X_2 - A_3X_3}{A_1 - A_2 - A_3}$$

$$= \frac{22500 \times 75 - 3125 \times 16.67 - 3926.99 \times 128.78}{22500 - 3125 - 3926.99}$$

$$\overline{\mathbf{X}} = 73.128\, mm$$

Now,

$$\overline{\mathbf{Y}} = \frac{\sum AY}{\sum A} = \frac{A_1Y_1 - A_2Y_2 - A_3Y_3}{A_1 - A_2 - A_3}$$

$$= \frac{22500 \times 75 - 3125 \times 116.67 - 3926.99 \times 75}{22500 - 3125 - 3926.99}$$

$$\overline{\mathbf{Y}} = 66.751 \text{ mm}$$

$\therefore$ **Centroid** $(\overline{\mathbf{X}}, \overline{\mathbf{Y}}) = (\mathbf{73.128}\, \boldsymbol{mm}\, \mathbf{, 66.751\ mm})$.

3. a) State and prove parallel axis theorem.

- It states that "the moment of inertia of a plane area about any axis parallel to the centroidal axis is equal to the sum of moment of inertia about a parallel centroidal axis and the product of area and square of the distance between them ($i.e.$, to areas)." Mathematically;

$$I_{00} = I_{XX} + A\overline{y}^2$$

- Let us consider a plane area 'A' having XX and YY centroidal axis as shown in figure. For this let us consider an axis parallel to XX axis at a distance $\overline{y}$ from this axis.

**Download from www.arjun00.com.np

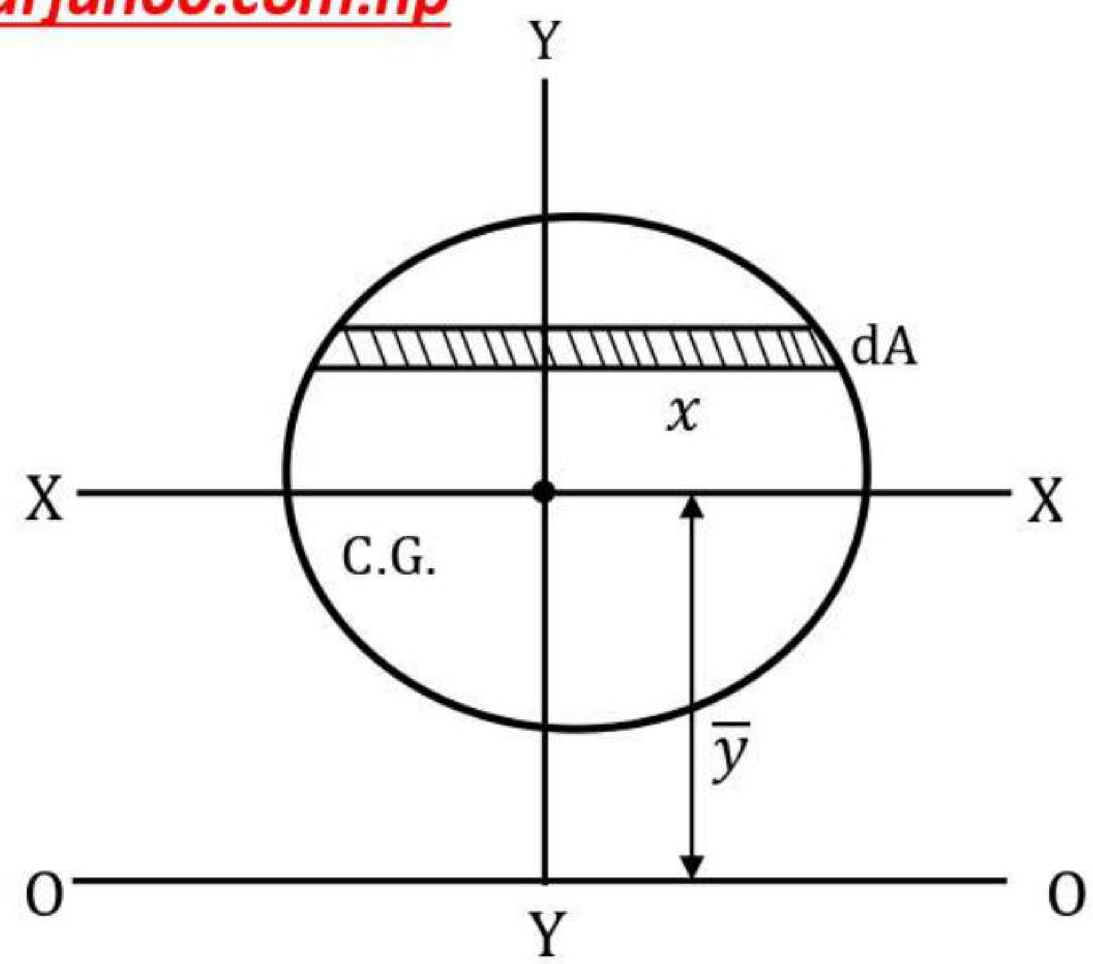

Take an elementary and dA at distance y form XX-axis.

We Know,

$$I_{XX} = \sum y^2 dA = \int y^2 dA$$

Also,

$$I_{c-x} = \sum (\bar{y} + y)^2 dA = \sum (\bar{y}^2 + 2\bar{y}y + y^2) dA$$

$$= \bar{y}^2 \sum dA + 2\bar{y} \sum y\, dA + \sum y^2\, dA = \bar{y}^2 \sum dA + 2\bar{y} \times 0 + I_{XX}$$

$$= I_{XX} + A\bar{y}^2 \quad \left[\because \sum ydA = 0, because\ first\ moment\ of\ area\ about\ centroidal\ axis = 0\right]$$

b) Find the MOI about x and y axis of given shaded area shown in figure.

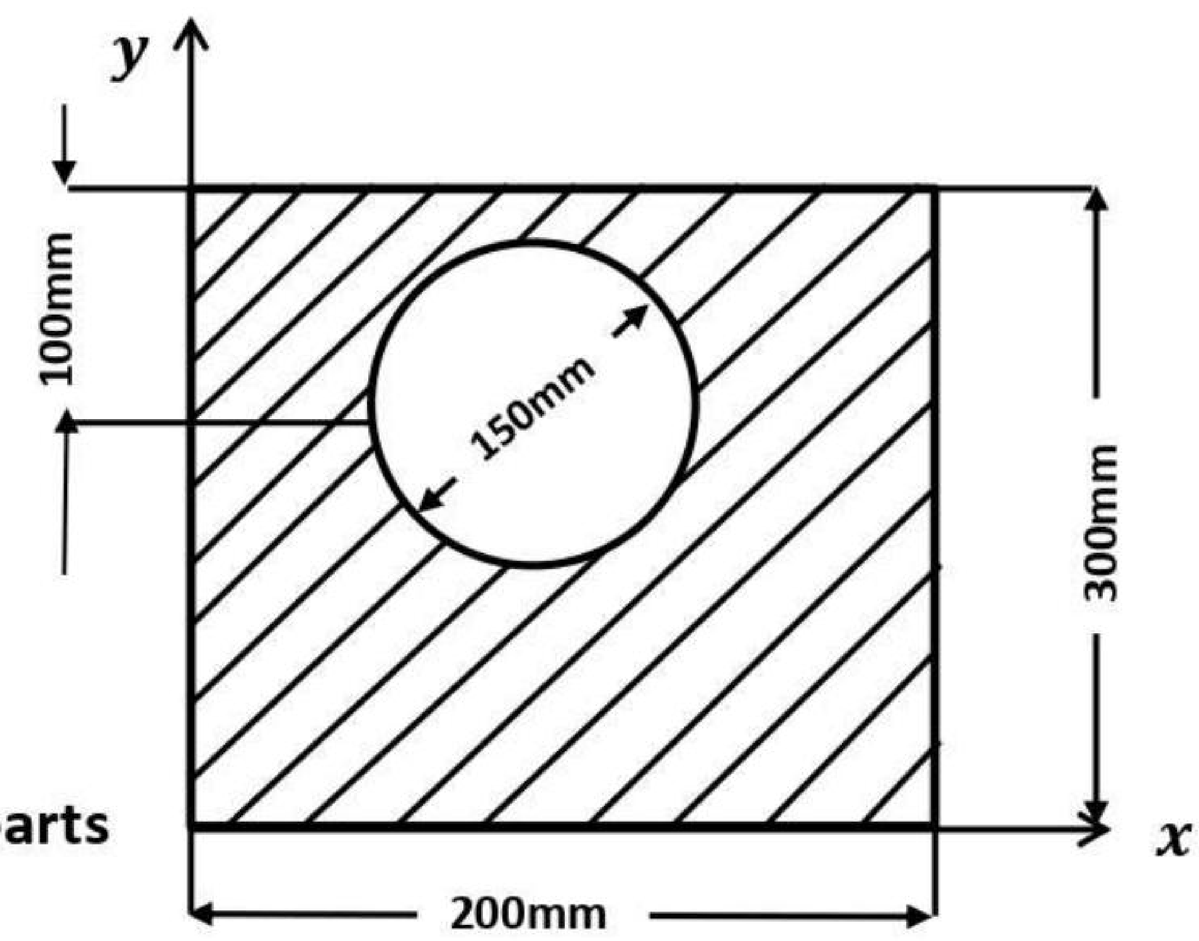

- **Dividing the composite figure into two parts For simplicity, then**

**Download from www.arjun00.com.np

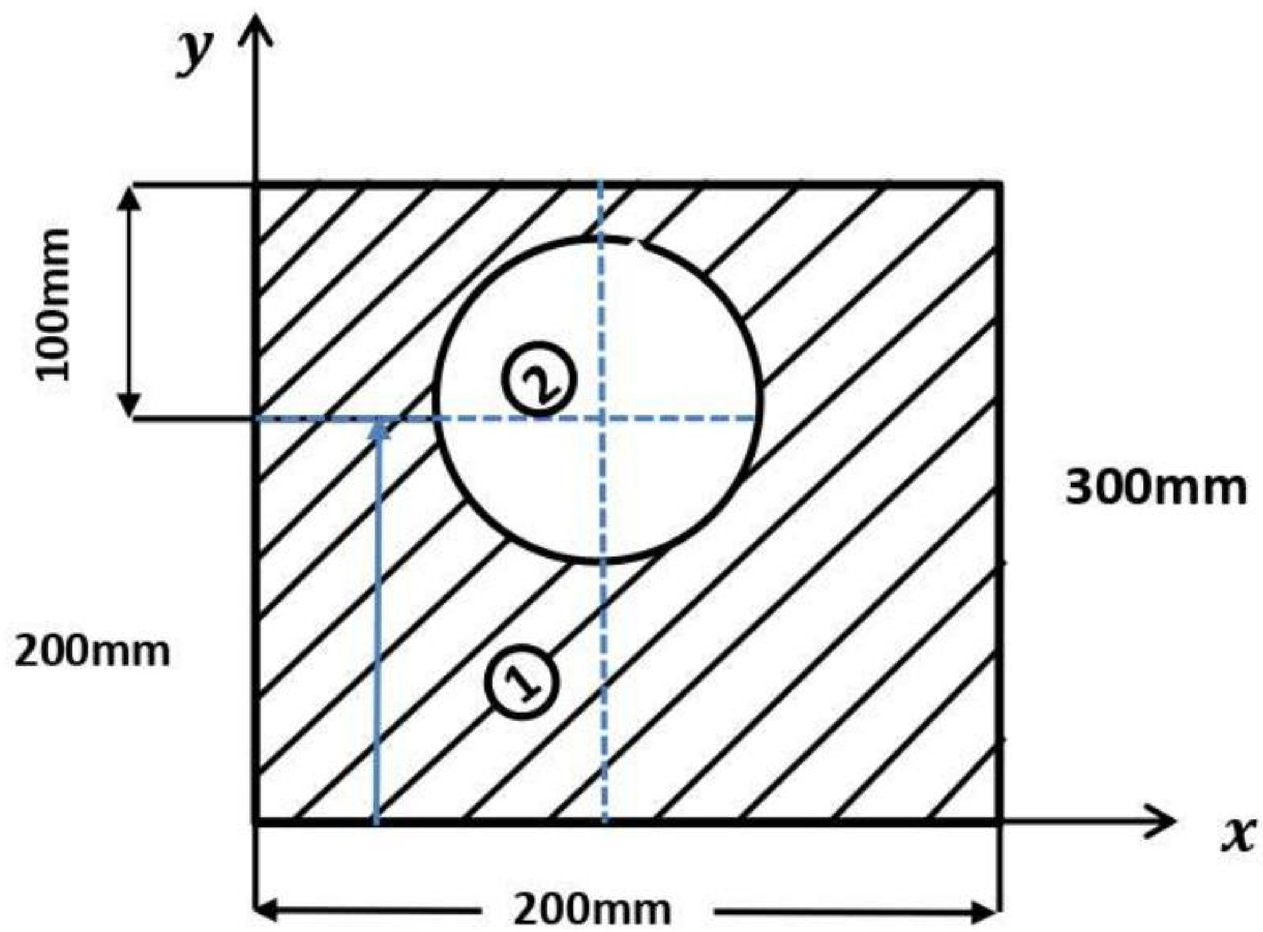

Fig	$\overline{X}$,mm	$\overline{Y}$,mm	Area, mm^2
1(+ve)	$\frac{200}{2} = 100$	$\frac{300}{2} = 150$	$200 \times 300 = 60000$
2(-ve)	$\frac{200}{2} = 100$	300-100 = 75	$\pi(75)^2 = 17671.458$

$$\overline{X} = \frac{\sum AX}{\sum A} = \frac{A_1X_1 - A_2X_2}{A_1 - A_2}$$

$$= \frac{60000 \times 100 - 17671.458 \times 100}{60000 - 17671.458}$$

$$\overline{X} = 100\ mm$$

Now,

$$\overline{Y} = \frac{\sum AY}{\sum A} = \frac{A_1Y_1 - A_2Y_2}{A_1 - A_2}$$

**Download from www.arjun00.com.np

$$= \frac{60000 \times 100 - 17671.458 \times 100}{60000 - 17671.458}$$

$$\bar{\mathbf{Y}} = 181.311 \text{ mm}$$

MOI about X-axis,

$$I_{X-X} = \left[\frac{bh^3}{12} + A_1\left(\bar{Y}\right)^2\right] - \left[\frac{\pi r^4}{4} + A_2\left(\bar{Y}\right)^2\right]$$

$$= \left[\frac{200 \times 300^3}{12} + 60000 \times (181.311)^2\right] - \left[\frac{\pi \times 75^4}{4} + 17671.458(181.311)^2\right]$$

$$= 2.422 \times 10^9 - 0.580 \times 10^9$$

$$I_{X-X} = 1.842 \times 10^9 \text{ mm}^4$$

MOI about Y-axis,

$$I_{Y-Y} = \left[\frac{hb^3}{12} + A_1\left(\bar{X}\right)^2\right] - \left[\frac{\pi r^4}{4} + A_2\left(\bar{X}\right)^2\right]$$

$$= \left[\frac{300 \times 200^3}{12} + 60000 \times (100)^2\right] - \left[\frac{\pi \times 75^4}{4} + 17671.458(100)^2\right]$$

$$= 0.8 \times 10^9 - 0.20 \times 10^9$$

$$I_{Y-Y} = 0.6 \times 10^9 \text{ mm}^4$$

Hence,

$$\mathbf{I_{X-X} = 1.842 \times 10^9 \text{ mm}^4}$$
$$\mathbf{I_{Y-Y} = 0.6 \times 10^9 \text{ mm}^4}$$

**Download from www.arjun00.com.np

4. a) Derive the relationship between loads, shear and bending moment.

➢ **Relationship between load, shear force and bending moment**

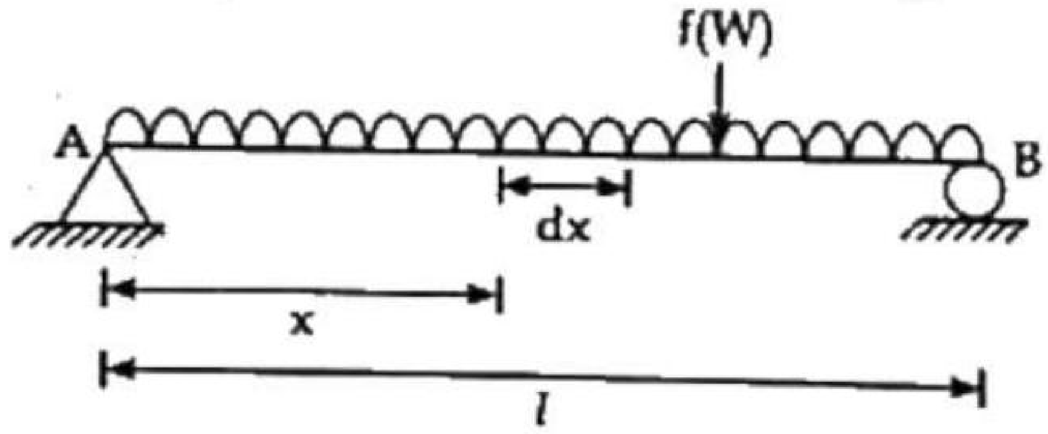

Consider a simply supposed beam as shown in above figure. Taking a strip 'dx' x distance from A. V be the shear force and M be the bending moment at left end and V + dV and M + dM at right end.

Since, beam is in equilibrium, so 'dx' is also in equilibrium.

$$(^{+}\uparrow)\sum F_y = 0$$

or, $V - W\,dx - (V + dV) = 0$

or, $\dfrac{dV}{dx} = -W$

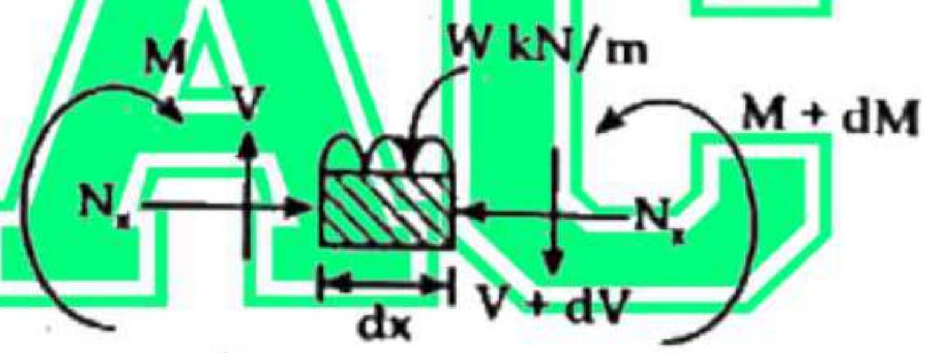

The rate of change of shear force with respect to x is equal to intensity of loading.

$\therefore \quad V = -\int W\,dx + C$

Area under the load curve with negative sign gives change in shear force.

Also,

$$(^{+}\circlearrowleft)\sum M_0 = 0$$

or, $M + dM - W\,dx\left(\dfrac{dx}{2}\right) - (M - dM) = 0$

or, $M + V\,dx - M - dM = 0 \qquad \left[\text{Neglecting } \dfrac{W(dx)^2}{2}\right]$

$\therefore \quad V = \dfrac{dM}{dx}$

The rate of change of bending moment with respect to x is equal to shear force.

$\therefore \quad M = \int V\,dx + C_1$

Area under shear curve gives change in bending moment.

**Download from www.arjun00.com.np

b) Find the support reactions at supports for given beam loaded as shown in figure.

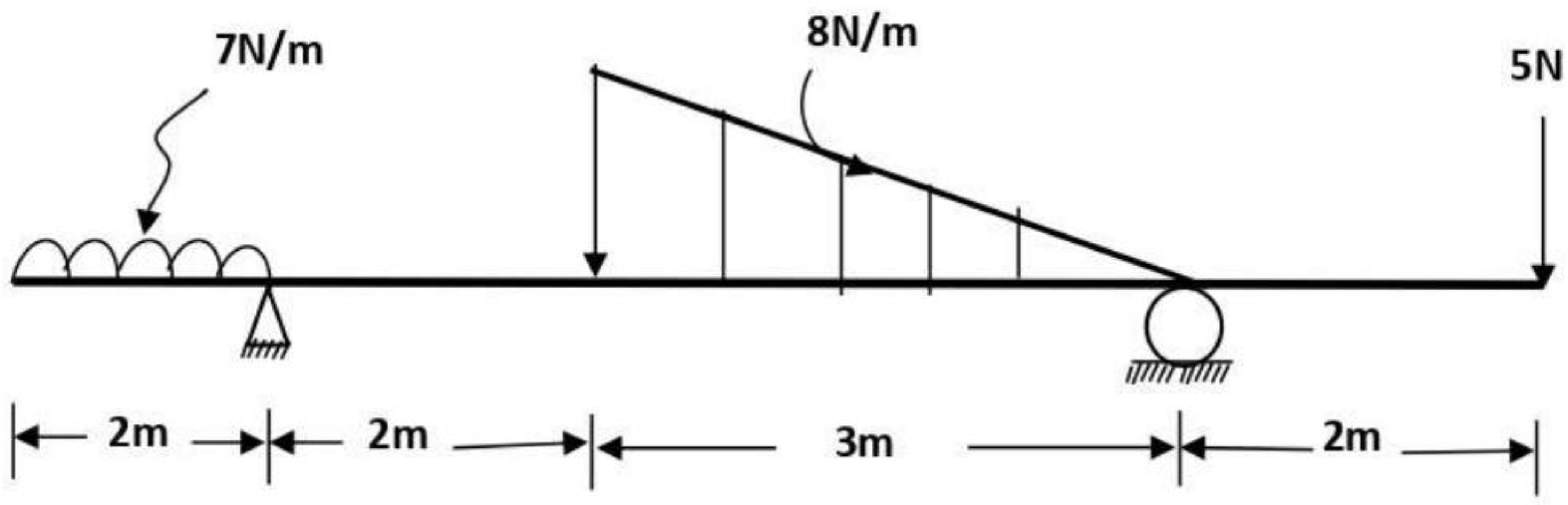

➢ Let R_A and R_B be the reactions at support A and B respectively. Let, R_{AX} be the horizontal reaction at support A.

$$\sum R_X = 0$$

$$\therefore R_{AX} = 0$$

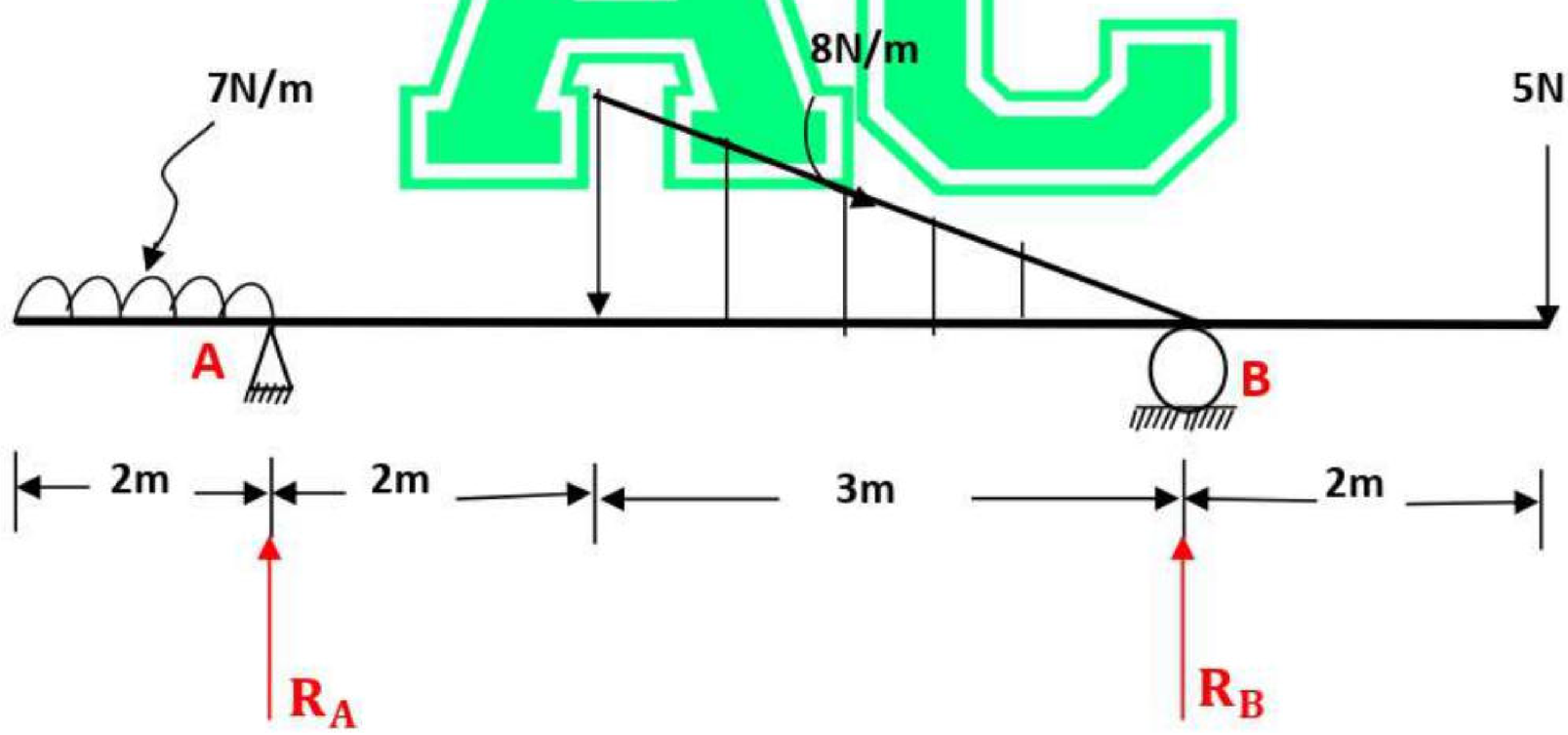

Taking moment at A and equating the same; we get,

$$(+\circlearrowleft) \sum M_A = 0$$

$$R_B \times 5 + 7 \times 2 \times \left(\frac{2}{2}\right) - \frac{1}{2} \times 8 \times 3\left(2 + \frac{3}{3}\right) - 5 \times 7 = 0$$

or, $R_B = \frac{57}{5}$

**Download from www.arjun00.com.np

$\therefore R_A = 11.4\ \text{kN}\ (\uparrow)$

and $(\uparrow\ +\text{ve}) \sum F_y = 0$

or, $R_A + R_B - \left(\frac{1}{2} \times 8 \times 3 + 5 + 7 \times 2\right) = 0$

or, $R_B = 31 - 11.4$

$\therefore R_B = 19.6\ \text{kN}\ (\uparrow)$

5. a) Define limiting friction. What are the characteristics of dry friction?

- The maximum value of frictional force which acts on the body when it just starts to slide over another body is called **limiting friction**.

- **The Characteristics of Dry Friction:--**
  - Dry friction causes resistance when pushing objects along a surface.
  - Friction works in the direction opposite of the object's movement.
  - The force of friction is proportional to the normal force. The normal force is the force acting perpendicular to the contacting surface.
  - Friction depends on the nature of the surfaces in contact. It also depends on the smoothness and roughness of the surfaces that are in contact.
  - Pending motion is the state just before surfaces start to slip. In this case, the static frictional force has reached its upper limit.

**Download from www.arjun00.com.np

- The coefficient of friction is a dimensionless scalar value that describes the ratio of the force of friction between two bodies and the force pressing them together.

b) Determine the force developed in members of given truss:

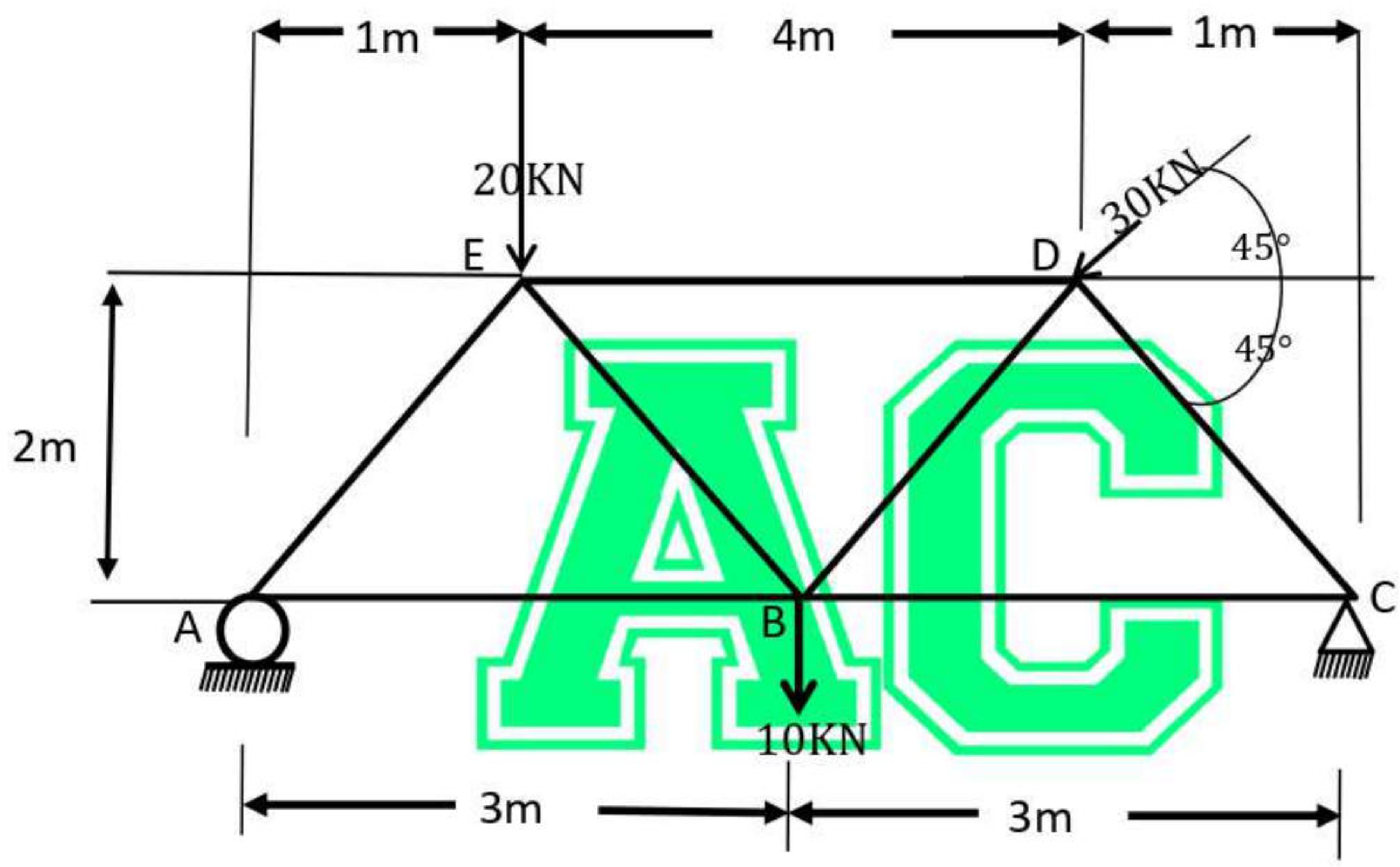

➢ The figure is redrawn again below:-

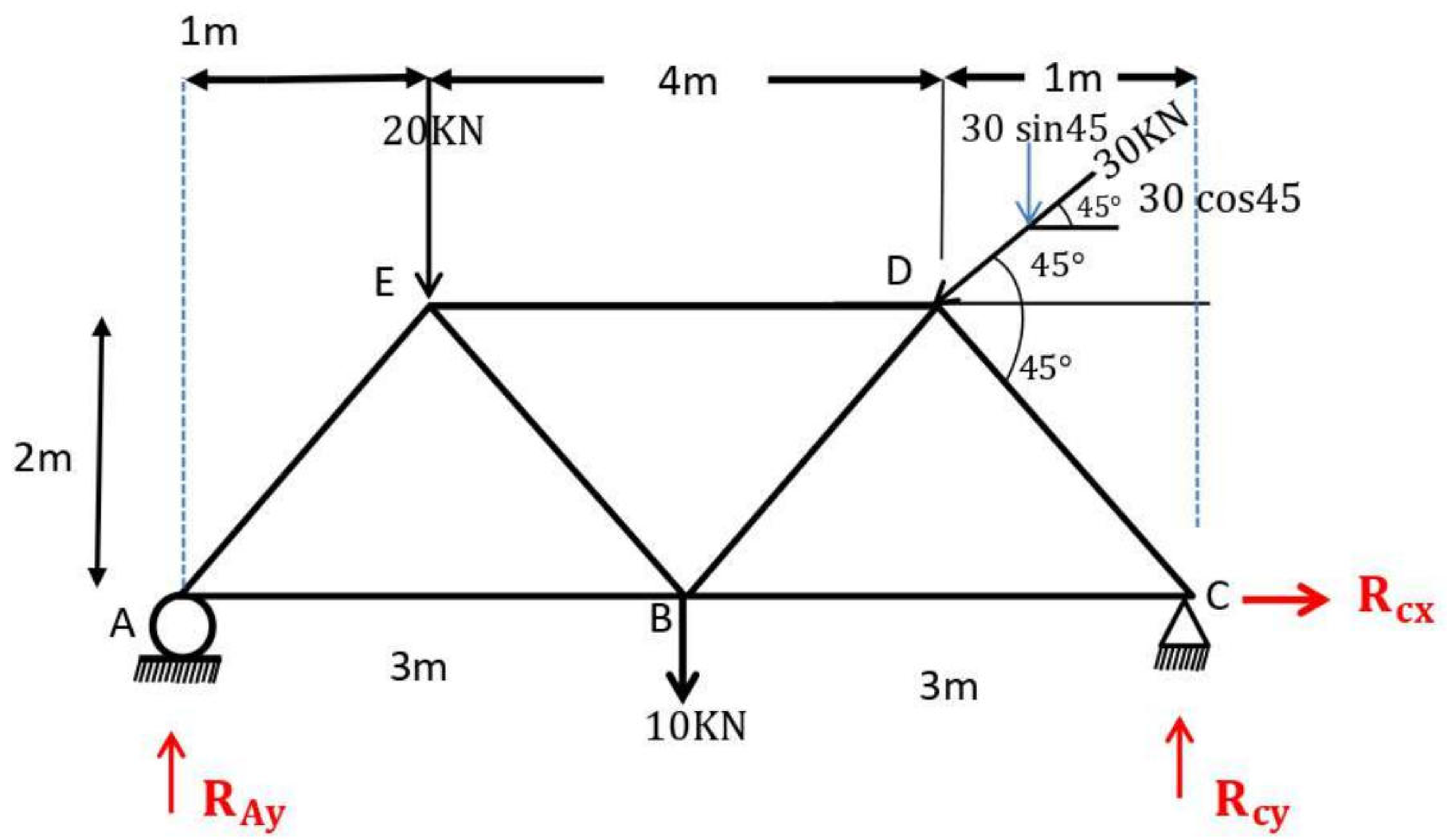

**Download from www.arjun00.com.np

$$\sum M_c\ (\circlearrowleft + ve) = 0$$

$$+30\cos 45 \times 2 + 30\ \sin 45 \times 1 + 20 \times 5 + 10 \times 3 - R_{Ay} \times 6 = 0$$

$$193.693 - R_{Ay} \times 6 = 0$$

$$R_{Ay} = 32.27\ \text{KN.}\ (\uparrow)$$

$$\sum F_x\ (\rightarrow + ve) = 0$$

$$R_{cx} - 30\cos 45 = 0$$

$$R_{cx} = 21.21\ \text{KN.}\ (\longrightarrow)$$

$$\sum F_y\ (\uparrow + ve) = 0$$

$$R_{Ay} + R_{cy} - 20 - 10 - 30\cos 45 = 0$$

$$32.27 + R_{cy} - 20 - 10 - 21.21 = 0$$

$$R_{cy} = 18.94\ \text{KN.}\ (\uparrow)$$

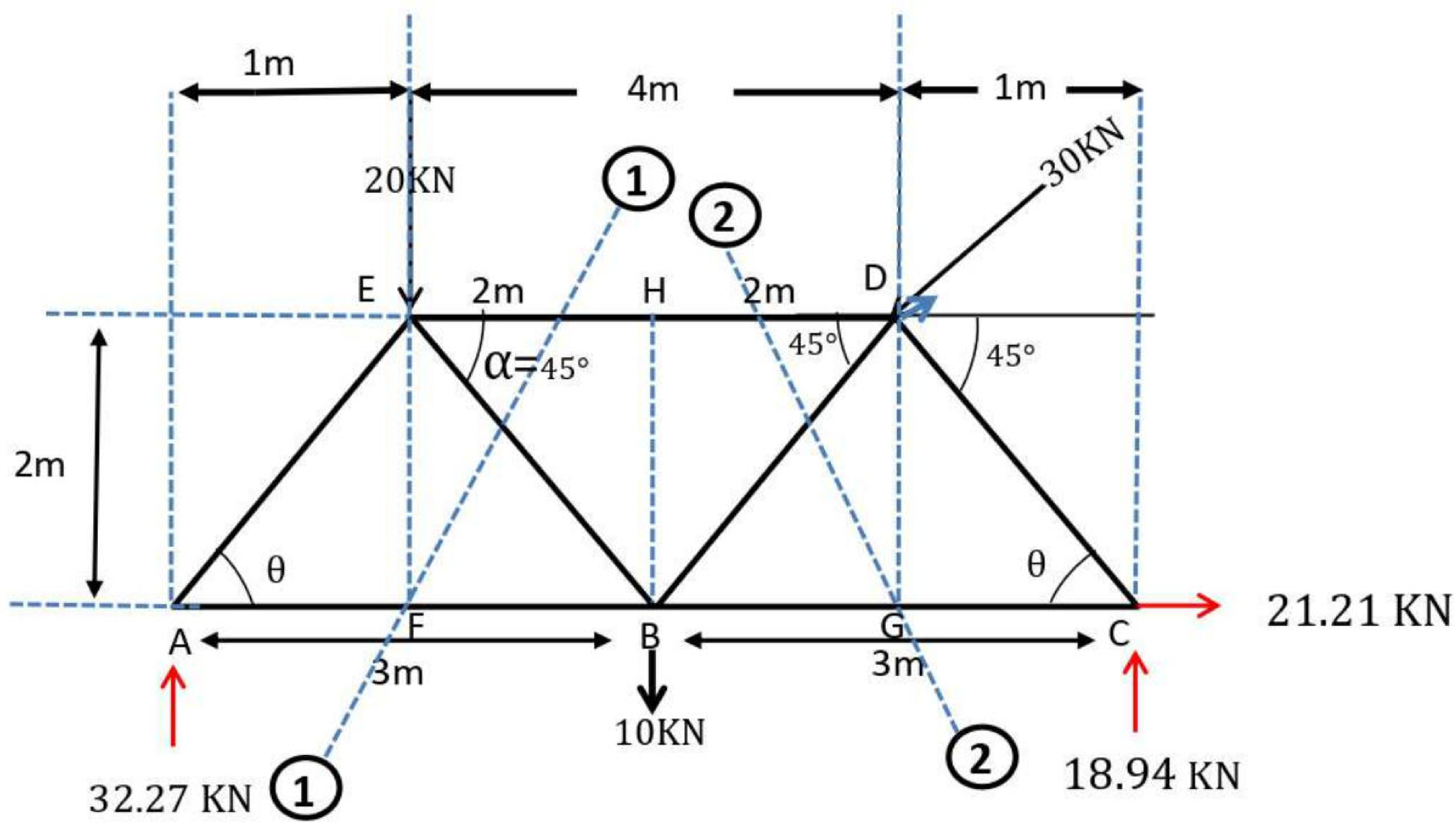

**Download from www.arjun00.com.np

In Δ CDG, $\tan\theta = \frac{DG}{GC}$

$$\theta = \tan^{-1}\left(\frac{2}{1}\right) = 63.43°$$

In Δ EBH,

$$\tan\alpha = \left(\frac{BH}{HF}\right)$$

$$\alpha = \tan^{-1}\left(\frac{2}{2}\right) = 45°$$

Using section (1) - (1) of left Part

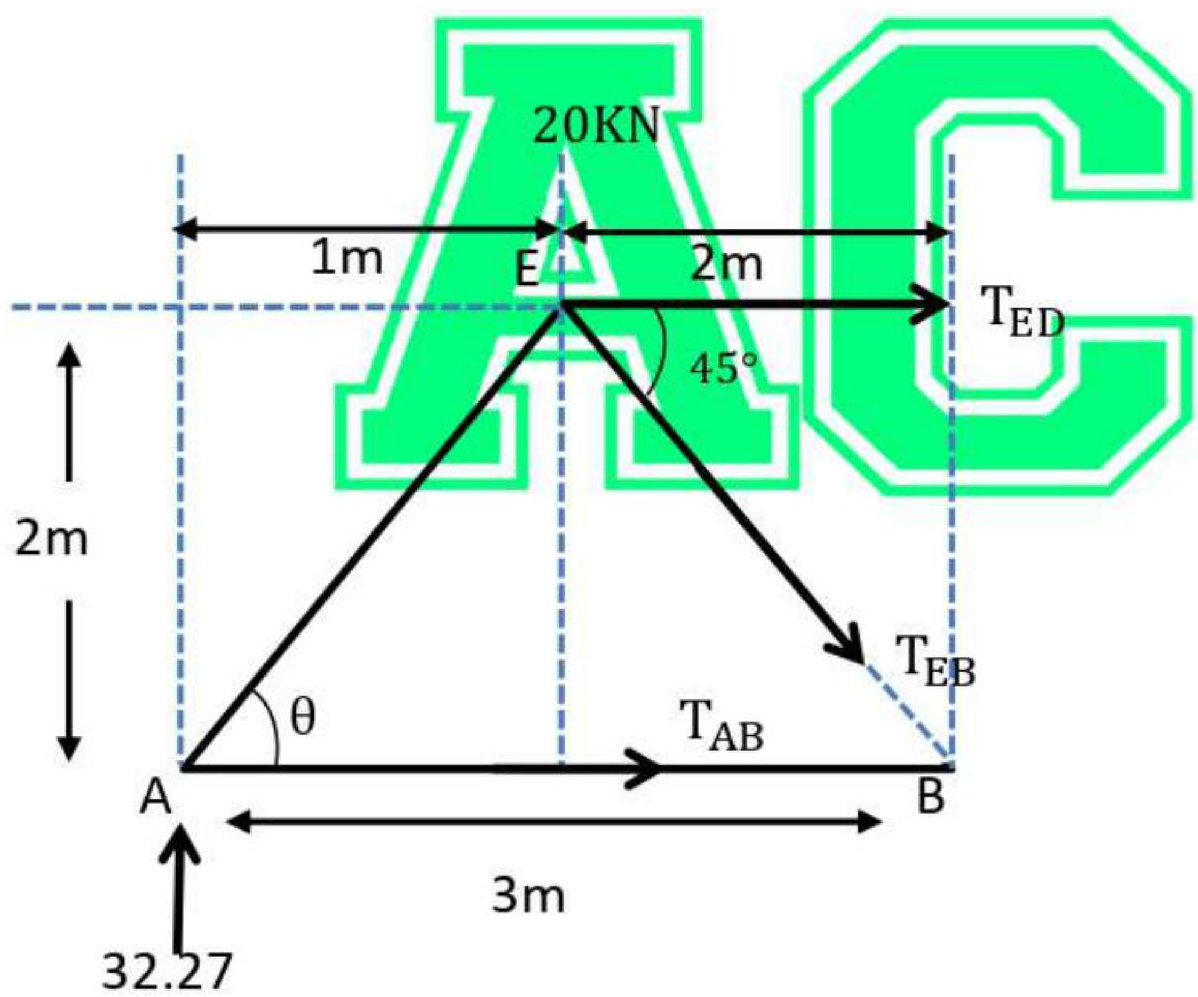

$$\sum M_B\ (\ \ +ve) = 0$$

$$32.27 \times 3 - 20 \times (2) + T_{ED} \times 2 = 0$$

$$T_{ED} = 28.405 \text{ KN. (T)}$$

**Download from www.arjun00.com.np

$$\sum M_{(E)} = 0 \ (\circlearrowleft + ve)$$

$$32.27 \times 1 - T_{AB} \times 2 = 0$$

$$T_{AB} = 16.135 \text{ KN. (T)}$$

$$\sum M_A \ (\circlearrowleft + ve) = 0$$

$$20 \times 1 + T_{ED} \times 2 + T_{EB} \cos 45 \times 2 - T_{EB} \sin 45 \times 1 = 0$$

$$20 \times 1 + 28.405 \times 2 + 1.414\, T_{EB} - 0.707\, T_{EB} = 0$$

$$76.81 + 0.707\, T_{EB} = 0$$

$$T_{EB} = \frac{-76.81}{0.707}$$

$$= -108.64 \text{ KN}$$

$$T_{EB} = 108.64 \text{ KN (C)}$$

For T_{AE}, Solution Joint A.

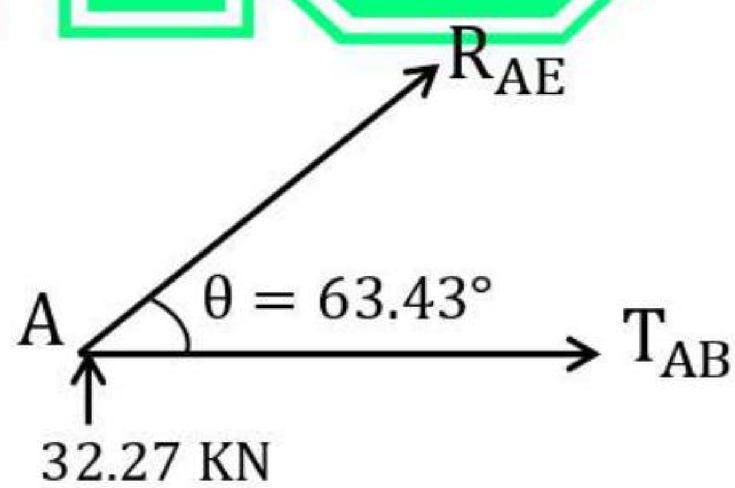

$$\sum F_y \ (\uparrow + ve) = 0$$

$$R_{AE} \sin(63.43°) + 32.27 = 0$$

$$R_{AE} = \frac{-32.27}{\sin(63.43°)}$$

$$= -36.08 \text{ KN}$$

$$R_{AE} = 36.08 \text{ KN (C)}$$

**Download from www.arjun00.com.np

Using Right part of Section (2) - (2)

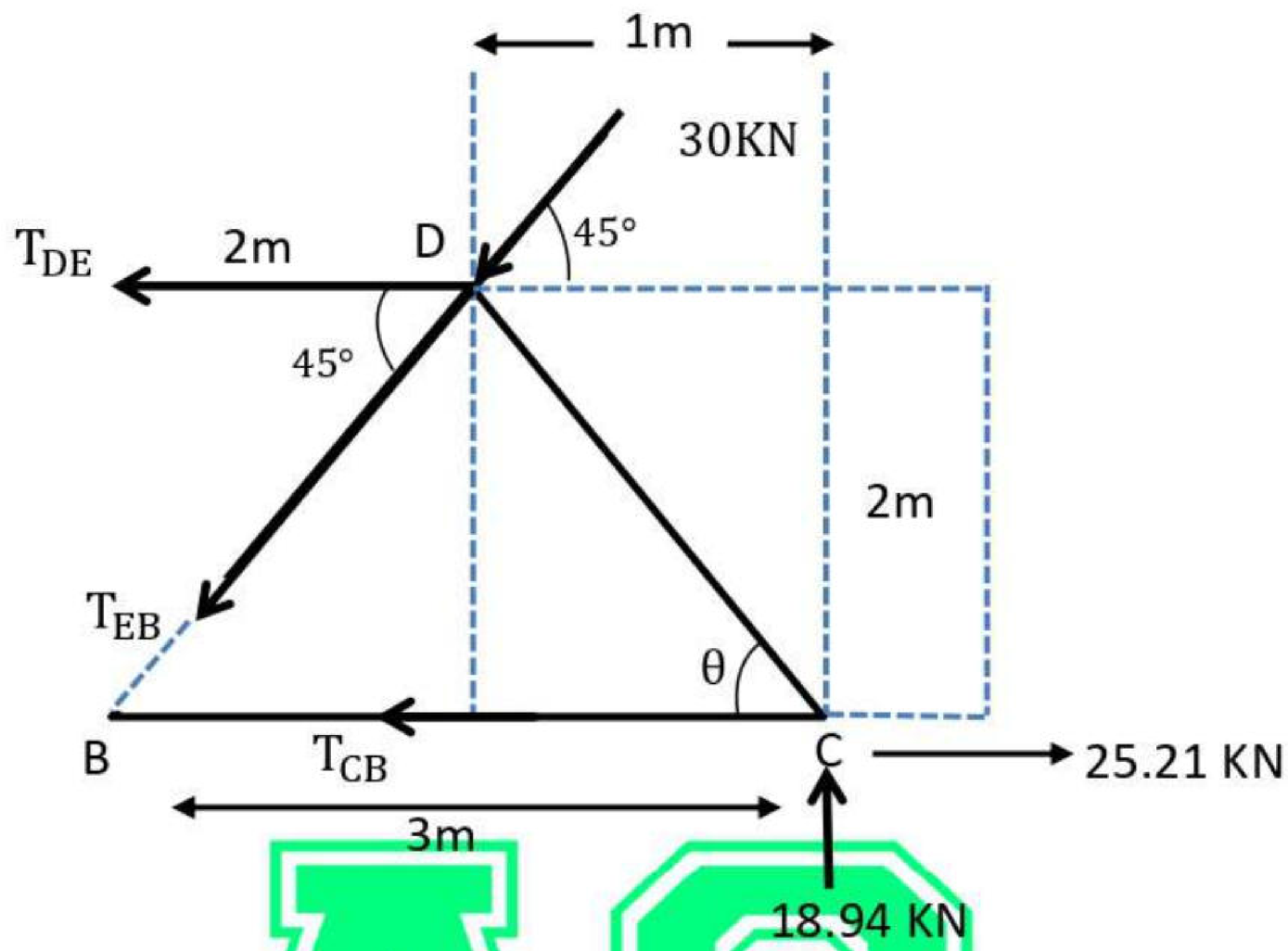

$$\sum M_D\ (\circlearrowleft + ve) = 0$$

$$T_{CB} \times 2 - 18.94 \times 1 - 25.21 \times 2 = 0$$

$$T_{CB} = 15.74\ KN\ (T)$$

Solving joint D for R_{DB} & R_{DC}

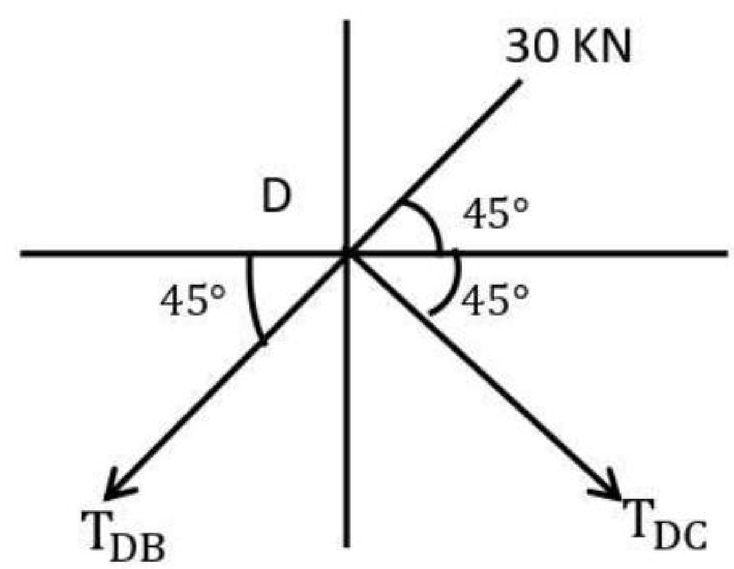

$$\sum F_y\ (\uparrow + ve) = 0$$

$$-30 \sin 45 - T_{DB} \sin 45 - T_{DC} \sin 45 = 0$$

$$T_{DC} + T_{DB} = 30 \cdots\cdots (i)$$

$$\sum F_x\ (\uparrow + ve) = 0$$

$$-30 \cos 45 - T_{DC}\ Cos\ 45 - T_{DB} \cos 45 = 0$$

$$T_{DC} - T_{DB} = 30 \cdots\cdots (ii)$$

**Download from www.arjun00.com.np

Subtracting eqn (i) and (ii) using calculator,

$$T_{DC} = 30 \text{ KN (T)} \quad T_{DB} = 0 \text{ KN}$$

Member	Force in Magnitude	Nature
AB	16.135	Tensile
BC	15.74	Tensile
CD	30	Tensile
DE	28.405	Tensile
AE	36.08	Compressive
BE	108.64	Compressive
BD	0	-

6. Write short notes on:

a) Resolution and composition of forces

- The process of splitting up the given force into a number of components without changing its effect on the body is called **resolution of a force**. Resolution of force is a reverse process in which a single force is expressed in terms of its components. These components are sometimes referred to as the resolved parts of the force.
- The reduction of a given system of forces to the simplest system that will be it's equivalent is called composition of forces. When a number of forces are represented by a single force having the same effect as that of a number of forces, it is called resultant force. The process of finding out the resultant force is called **composition of forces**

**Download from www.arjun00.com.np

b) Angle of friction.

- Angle of friction (ϕ) is defined as the angle which the resultant of normal reaction and limiting frictional force makes with the normal reaction.

Where,

N = Normal reaction

f_s = Limiting Friction

R = Resultant of N and F_s

$$= \sqrt{N^2 + {f_s}^2}$$

$\therefore \tan\phi = \frac{f_s}{N} = \mu_s$ where ϕ is angle of friction.

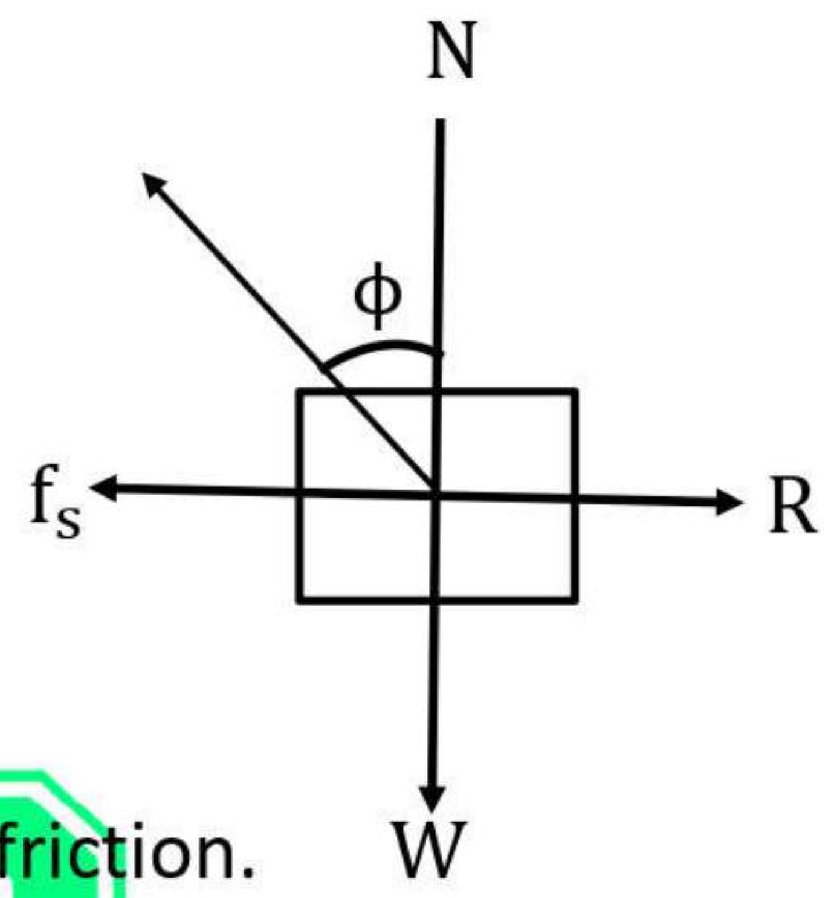

c) Moments and couple

- Moment can be defined as the turning effect produced by a force on the body on which it acts about which the moment is required and the line of action of force. Mathematically;

$$m = F \times d$$

- A pair of two equal and parallel forces having same magnitude and Opposite direction is known as couple. The pair of forces is separated by certain distance they are parallel not collinear.

**Download from www.arjun00.com.np

d) Radius of gyration

- If the entire area (or mass) of a lamina is concentrated at a point such that there is no change in the moment of inertia about a given axis, then distance of that point from the given axis is called **radius of gyration.**

e) Support and its types

- A support is a construction that uses beams, columns, and other components to sustain a load. Supports help other members resist loads, and they transfer the load to the ground and provide stability to the structure.

- **The different types of Support are:-**

a) Roller support

- It gives rise to one force which is perpendicular to the plane supporting the plane.

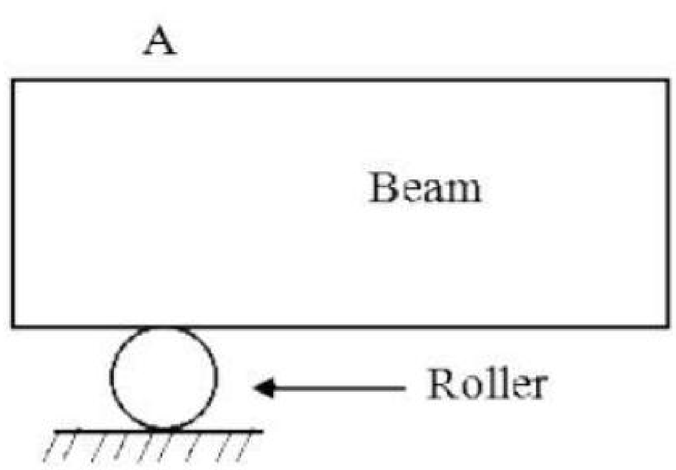

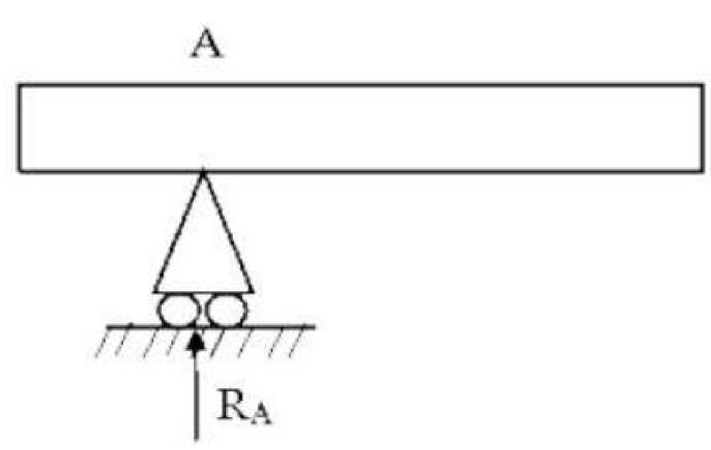

No. of reaction = 1

**Download from www.arjun00.com.np

b) Hinge support

- It gives rise to one force reaction whose direction is unknown. It can be resolved into two forces along x and y axes.

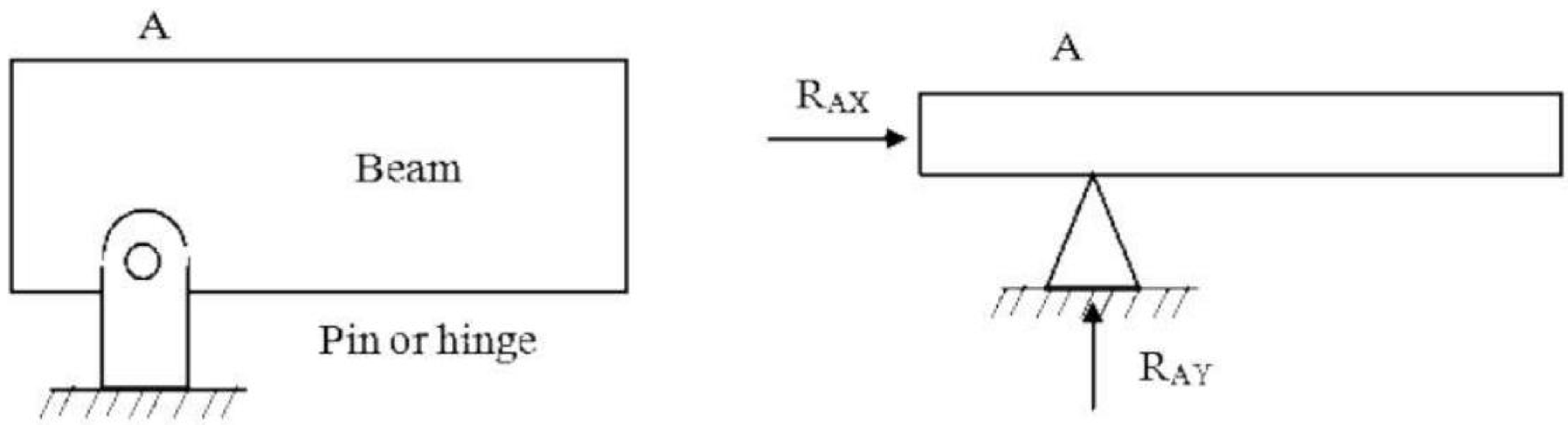

No. of reaction = 2

c) Fixed support

- It gives rise to one force reaction (having two components) and one reaction moment.

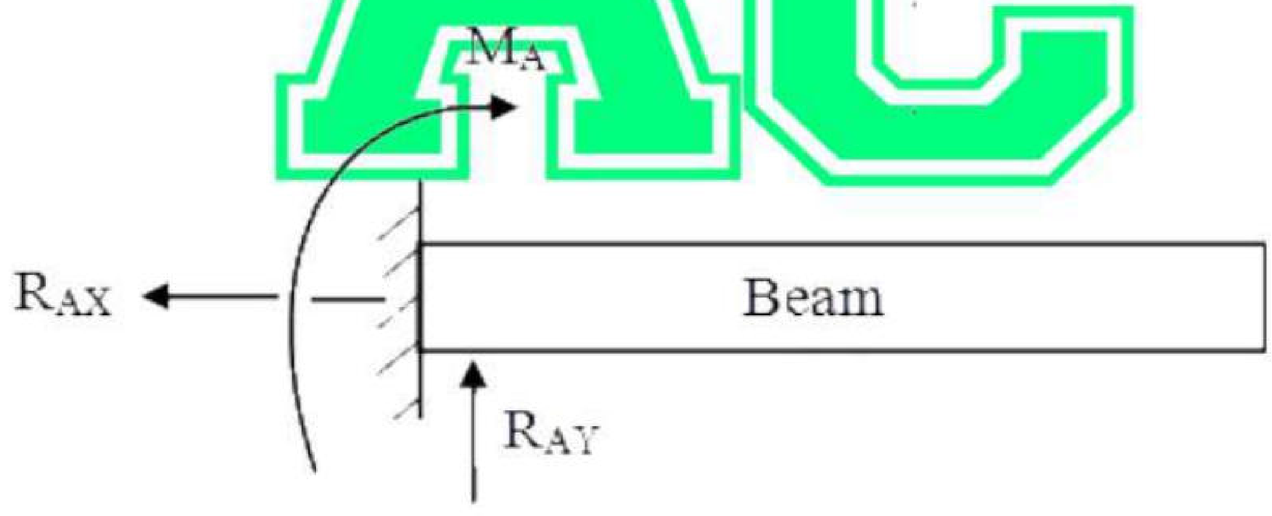

No. of reaction = 3

-The End-

****This Solution is for Educational Purpose Only. If you misuse it, we are not Responsible.**

**Download from www.arjun00.com.np

Applied Mechanics__(Engg. All) 2nd Sem

(2080 R/B) Question Paper Solution.

Compile & Written by © Arjun Chy
Website :- www.arjun00.com.np
Facebook :-www.facebook.com/Arjun00.com.np

1. a) Define Particle, Rigid Body and Deformable Body.

- **Particle** is defined as the object which is shapeless and can be used by scientist to research about their field.
- **Rigid body** is the combination of two or more particles which are so interconnected that they do not change their shape and size or relative position when force is applied on it.
- **Deformable body** is the combination of two or more particles which are so interconnected that they change their relative position when force is applied on it.

b) Find magnitude and direction of force.

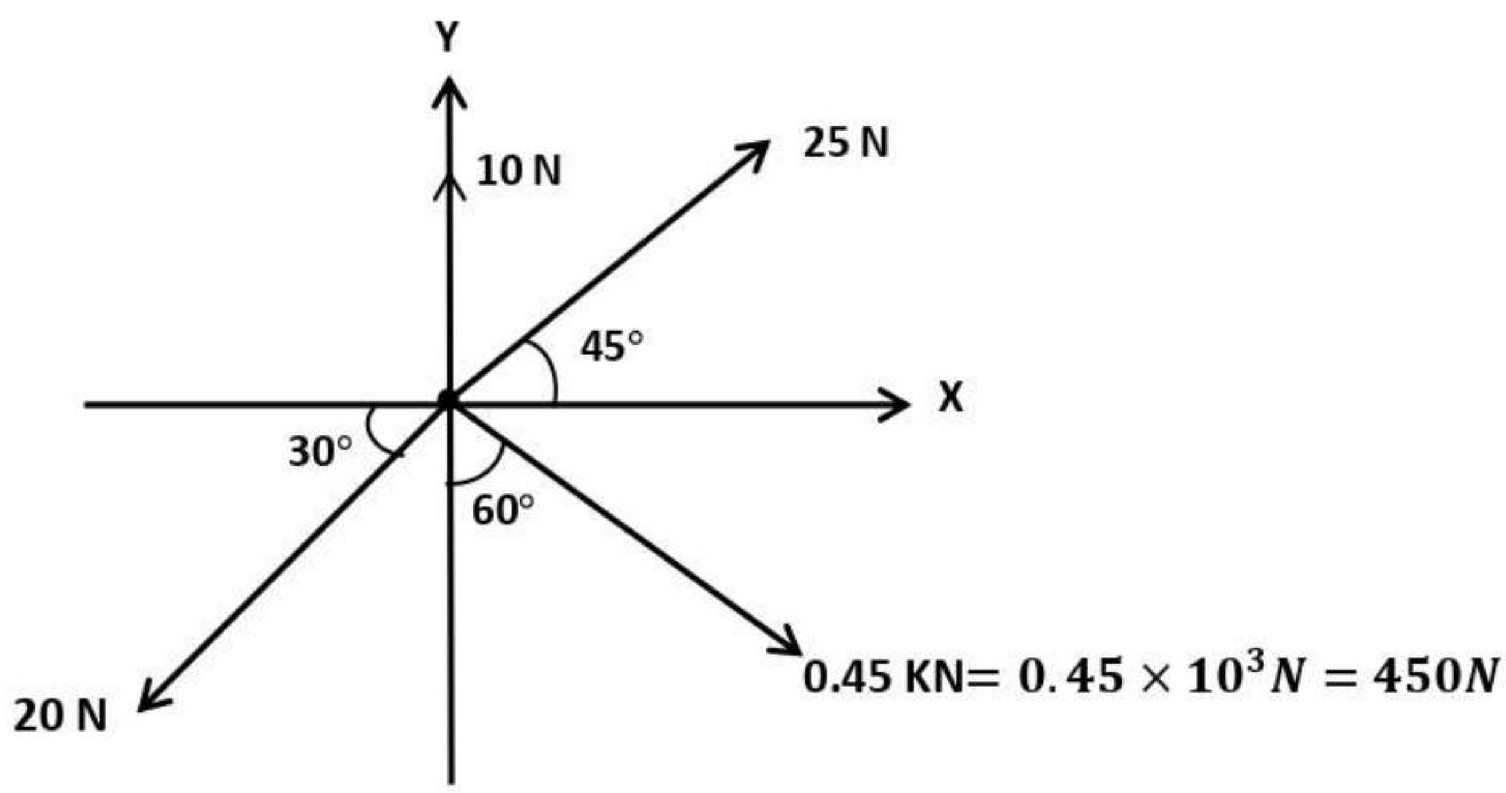

**Download from www.arjun00.com.np

Now,

Resolving all the forces horizontally $i.e.$, East-West line.(x-axis)

$$\sum \mathrm{H} = 25\cos 45° + 450\sin 60° - 20\cos 30°$$
$$= \mathbf{390.07}\boldsymbol{N}\ (\rightarrow)$$

Resolving all the forces Vertically $i.e.$, North-south line.(y-axis)

$$\sum \mathrm{V} = 10 + 25\sin 45° - 20\sin 30° - 450\cos 60°$$
$$= -\mathbf{207.32}\boldsymbol{N}\ (\uparrow)$$

$$As\ \sum \mathrm{H} = +ve\ , and\ \sum \mathrm{V} = -ve\ \ i.e. It\ lies\ on\ 4^{th}\ Quadrant$$

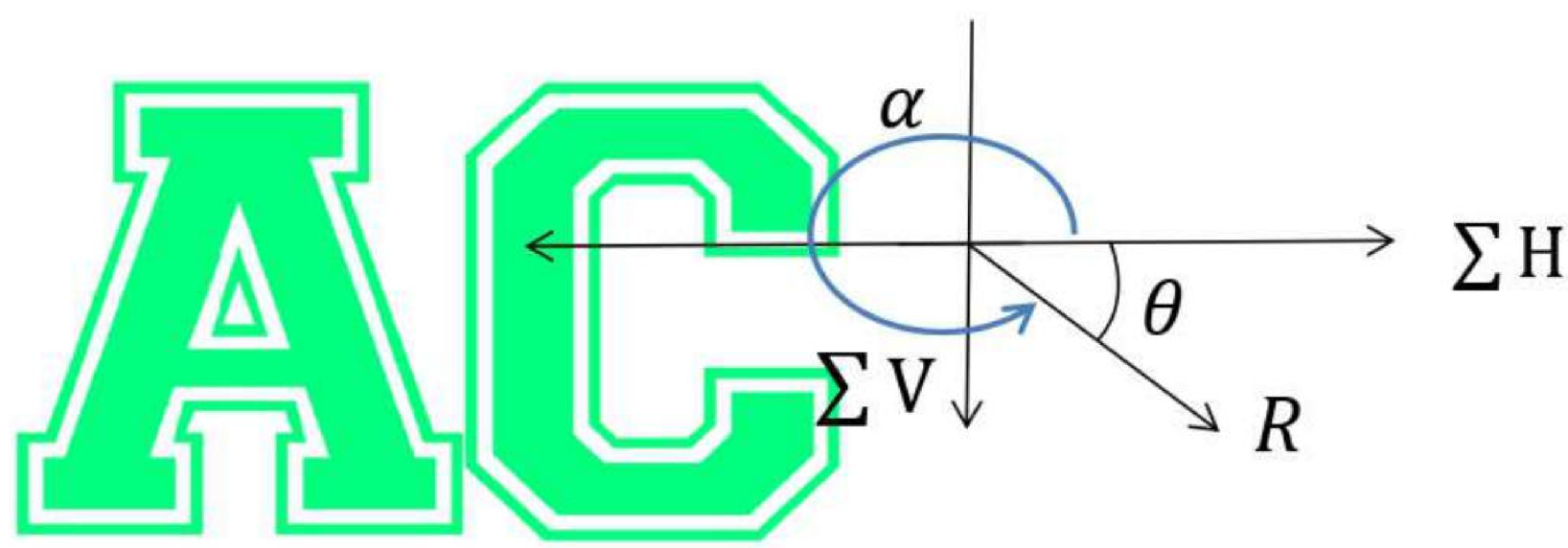

Let "R" be Resultant Force That make θ angles with horizontal (X-axis)

$$\mathrm{R} = \sqrt{\left(\sum \mathrm{H}\right)^2 + \left(\sum \mathrm{V}\right)^2} = \sqrt{(390.07)^2 + (-207.32)^2}$$
$$= \mathbf{441.74}\ \boldsymbol{N}$$

$$\boldsymbol{\theta} = \boldsymbol{tan}^{-1}\left(\frac{\sum \mathrm{V}}{\sum \mathrm{H}}\right) = tan^{-1}\left(\frac{-207.32}{390.07}\right)$$
$$= -\mathbf{27.99}°\ (\boldsymbol{lies\ in\ 4th\ quadrant})$$

$$\boldsymbol{Actual\ Angle}(\boldsymbol{\alpha}) = \mathbf{360 - 27.99}$$
$$= \mathbf{332.01}°\ \boldsymbol{from}\ (\boldsymbol{positive\ \ X - axis})$$

**Download from www.arjun00.com.np

2. a) State Lami's Theorem. Determine the tension on the rope AB and BC of the following system as shown in figure.

- **Statement**

"If three coplanar forces acting at a point be in equilibrium, then each force is proportional to the sine of the angle between the other two."

Mathematically;

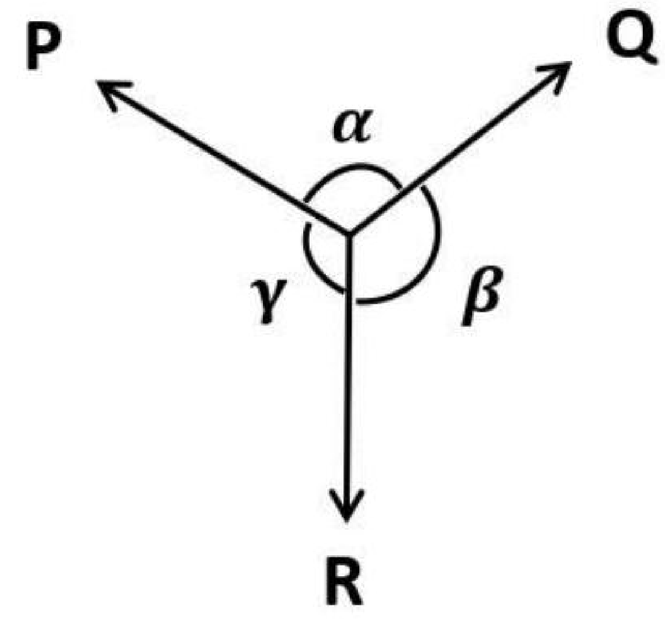

$$\frac{P}{\sin\beta} = \frac{Q}{\sin\gamma} = \frac{R}{\sin\alpha}$$

where, P, Q and R are three forces and β, γ, α are angles as shown in the figure.

- **Second Part Answer :**

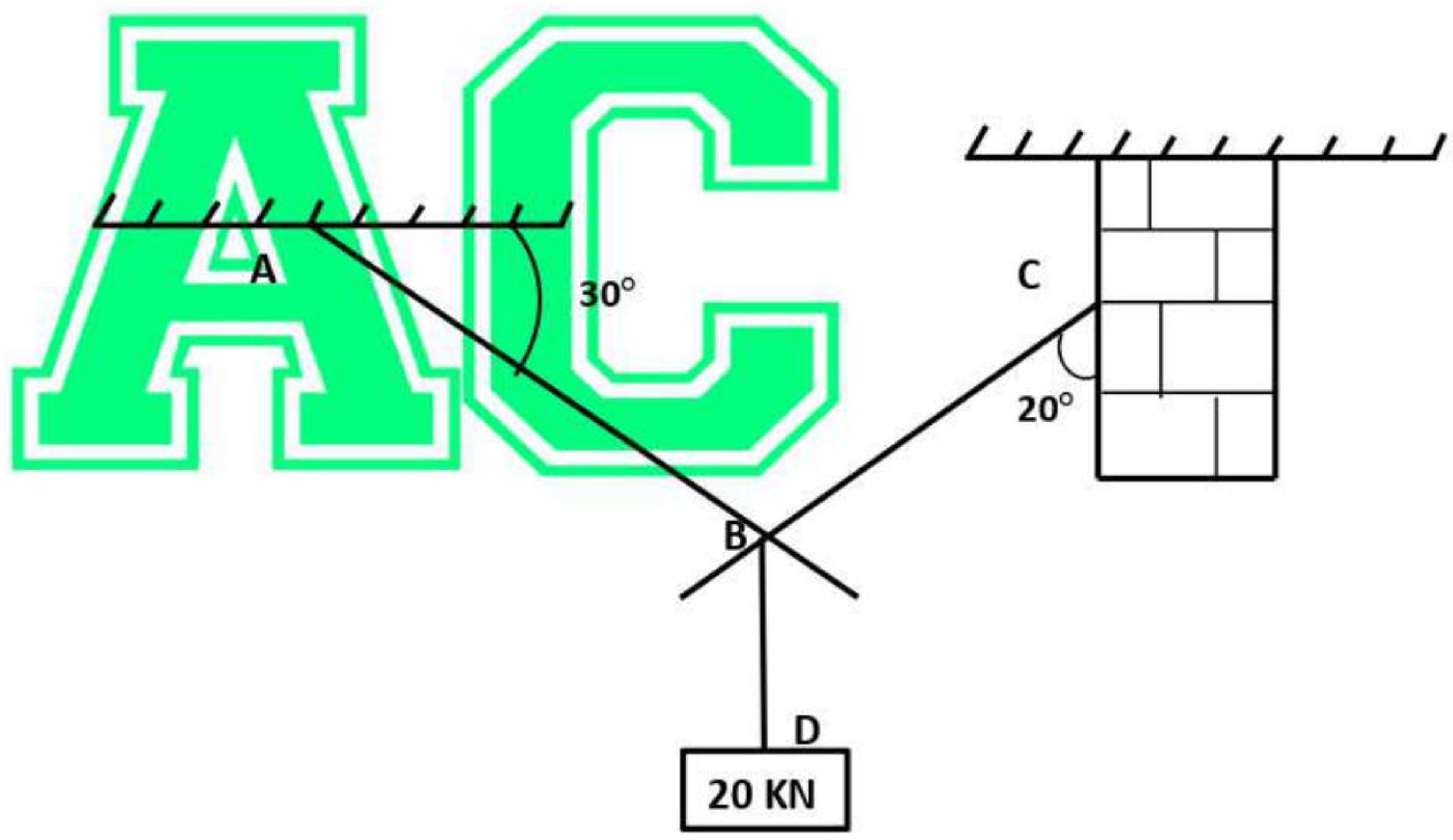

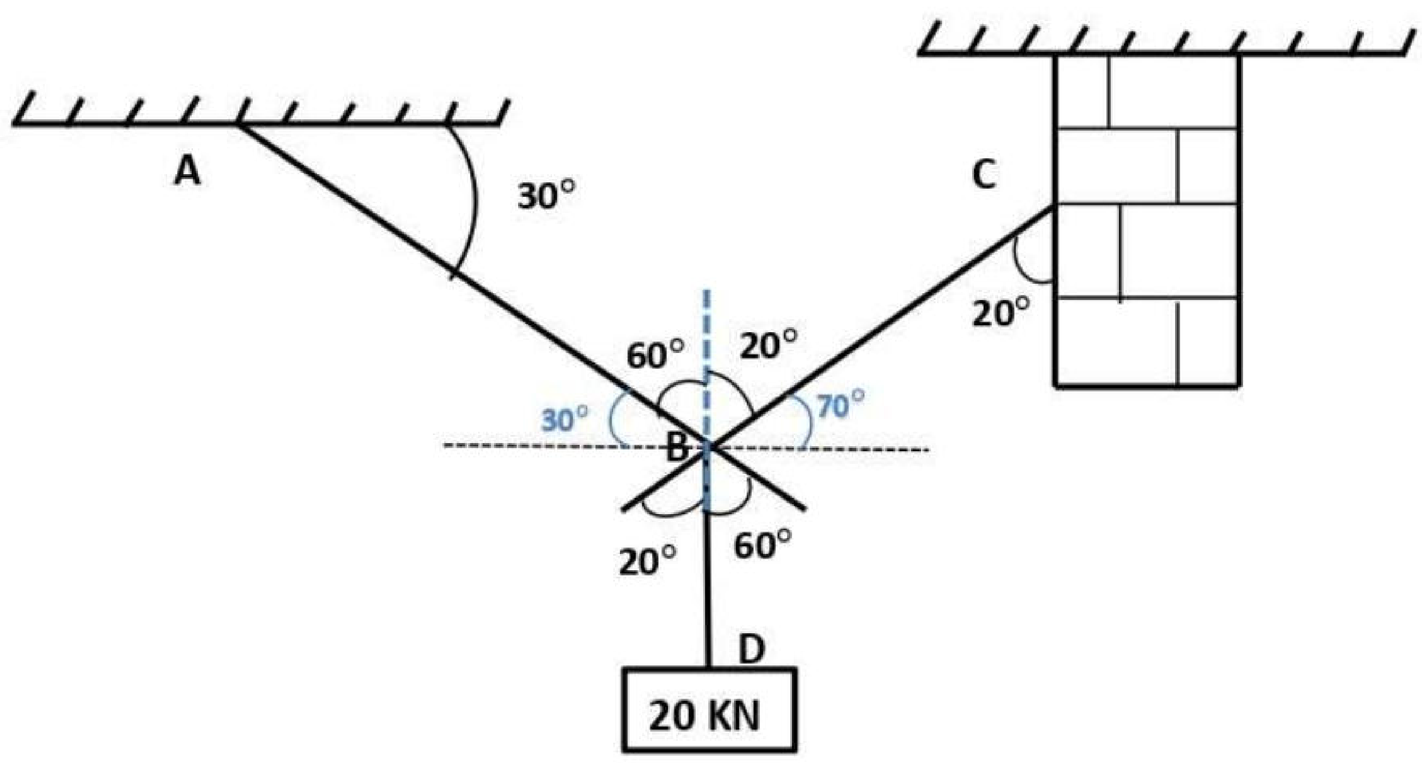

**Download from www.arjun00.com.np

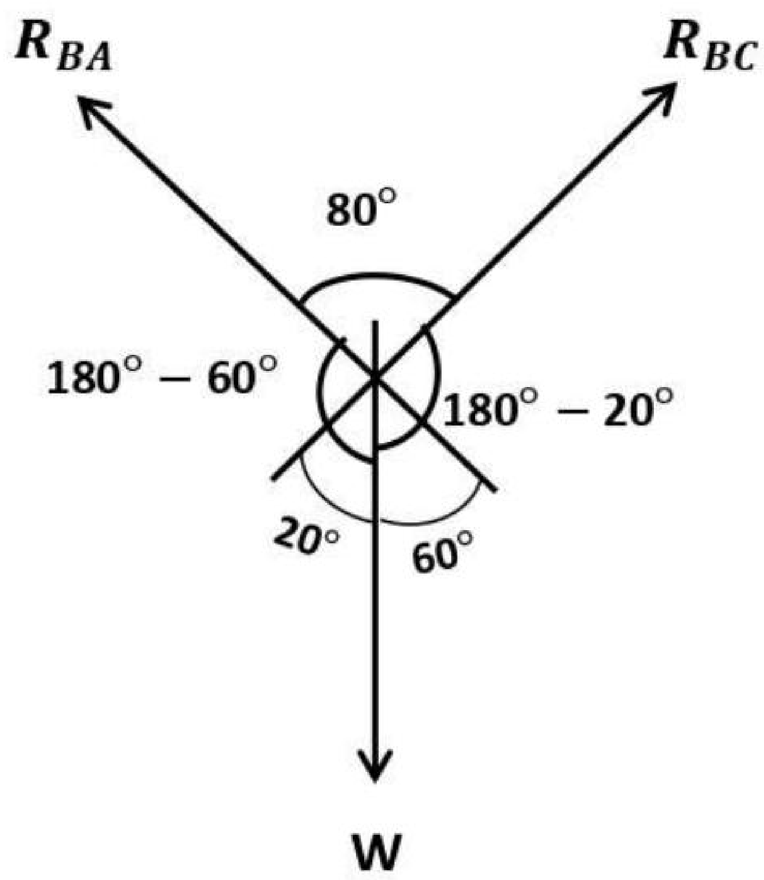

Applying Lami's Theorem ;

$$\frac{R_{BA}}{\sin(180 - 20)} = \frac{R_{BC}}{\sin(180 - 60)} = \frac{W}{\sin(80)}$$

Or, $$\frac{R_{BA}}{\sin(160)} = \frac{R_{BC}}{\sin(120)} = \frac{20}{\sin(80)}$$

Taking first and last ,

$$\frac{R_{BA}}{\sin(160)} = \frac{20}{\sin(80)}$$

$$R_{BA} = \frac{20}{\sin(80)} \times \sin(160) = \mathbf{6.946\ N}$$

Similarly, Taking Second and last

$$\frac{R_{BC}}{\sin(120)} = \frac{20}{\sin(80)}$$

$$R_B = \frac{20}{\sin(80)} \times \sin(120) = \mathbf{17.587\ N}$$

Hence, The tension on the rope AB and BC are **6.946 KN and 17.587 KN** respectively.

**Download from www.arjun00.com.np

b) Define free body diagram. Discuss briefly the steps to draw free body diagram with suitable example.

- A sketch of the isolated body showing all the forces acting on it by vectors is called a **free body diagram**.

- **The steps to draw FBD are :-**
  - FBD should have no external supports or connections.
  - The self weight (W = mg) should be indicated with vertical downward arrow.
  - The reactions from the supports and connections should be indicated.
  - The uncut member force should not be shown in FBD.
  - Tension in rope or string is directed towards support.
  - The adopted coordinate system and sense of unknown force should be shown in FBD.

For Example:-

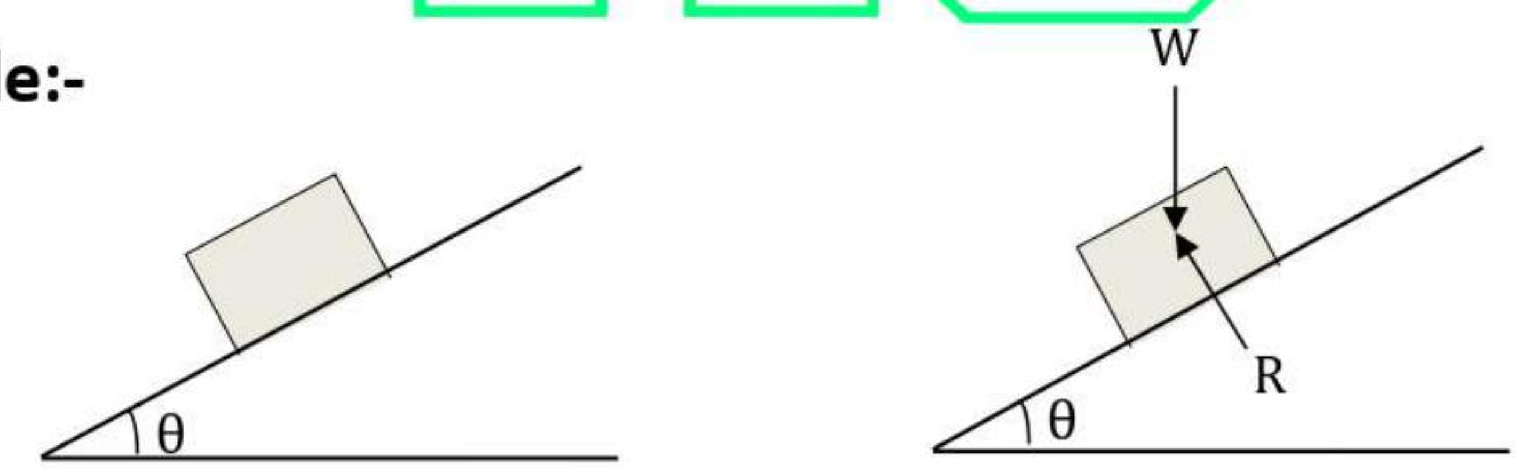

Figure :- Block resting on a smooth inclined plane and its free body diagram.

3. a) What is friction? Also write law of static friction.

- When a body slides over another body, a force is exerted a surface of contact by the stationary body on a moving body. The resisting force is called the force of friction and acts in the **direction opposite** to the direction of motion.

**Download from www.arjun00.com.np

➢ The laws of friction are as follows;

- The force of static friction always acts in a direction, opposite to that in which the body tends to move.
- The magnitude of the force of friction is exactly equal to the force, which tends to move the body.
- The magnitude of the following friction bears a constant ratio, to the normal reaction between the two surfaces.

$i.e.,\ \frac{F}{R}$ = Constant

$\therefore \quad \frac{F}{R} = \mu;$

Where, μ is the coefficient of friction.

F is the limiting friction.

R is the normal reaction.

- The force of friction is depends upon the roughness of the surfaces.
- The force of friction is independent of the area of the contact between two surfaces.

b) A load of 5KN is lying on inclined plane whose inclination with the horizontal is 30° of the coefficient of friction between load and plane is 0.4. Find minimum and maximum horizontal force which will keep the load in equilibrium.

➢ **For maximum Horizontal Force $i.e.$, Body Sliding Up Motion**

**Download from www.arjun00.com.np

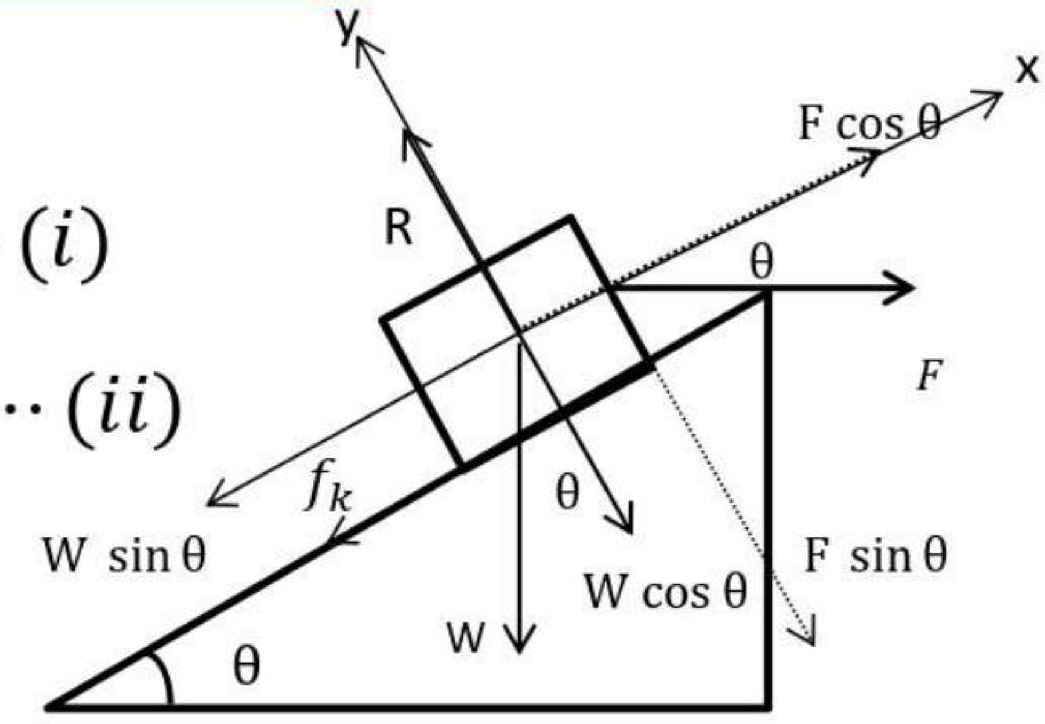

$\nwarrow \sum f_y = 0;\ \mathrm{R} = \mathrm{W}\cos\theta + \mathrm{F}\ \sin\theta \cdots\cdots (i)$

$\swarrow \sum f_x = 0;\ \ \mathrm{W}\ \sin\theta + \mathrm{f_k} = \mathrm{F}\cos\theta \cdots\cdots (ii)$

Using equations (i) on eqn (ii),we get

$$\mathrm{W}\sin\theta + \mu_k(\mathrm{W}\cos\theta + \mathrm{F}\ \sin\theta) = \mathrm{F}\cos\theta \qquad [\because\ \mathrm{f_k} = \mu_k\ \mathrm{R}\,]$$

$$\mathrm{W}(\sin\theta + \mu_k\cos\theta) = \mathrm{F}(\cos\theta - \mu_k\ \sin\theta)$$

$$\therefore \mathrm{F} = \frac{\mathrm{W}(\sin\theta + \mu_\mathrm{k}\cos\theta)}{(\cos\theta - \mu_\mathrm{k}\ \sin\theta)}$$

$$= \frac{5(\sin 30° + 0.4\cos 30°)}{(\cos 30° - 0.4\ \sin 30°)}$$

$$\therefore \mathrm{F_{max}} = 6.354\mathrm{N}$$

AC

➢For minimum Horizontal Force $i.e.$, Body Sliding Down Motion

At Equilibrium,

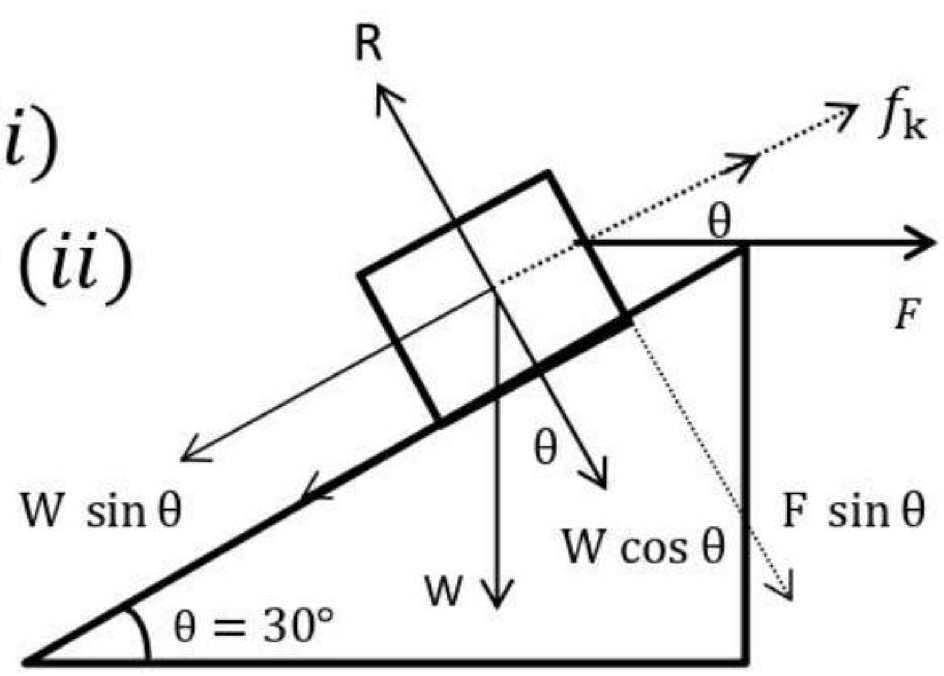

$\nwarrow \sum f_y = 0;\ \ \mathrm{R} = \mathrm{W}\cos\theta + \mathrm{F}\ \sin\theta \cdots\cdots (i)$

$\swarrow \sum f_x = 0;\ \ \mathrm{W}\ \sin\theta\ =\ \mathrm{f_k} + \mathrm{F}\cos\theta\ \cdots\cdots (ii)$

Using equations (i) on eqn (ii),we get

$[\because\ \mathrm{f_k} = \mu_k\ \mathrm{R}\,]$

**Download from www.arjun00.com.np

$$W \sin\theta = \mu_k(F \sin\theta + W\cos\theta) + F\cos\theta$$

$$W\,[\sin\theta - \mu_k\,(\cos\theta)] = F(\mu_k\,\sin\theta + \cos\theta)$$

$$\therefore F = \frac{W(\sin\theta - \mu_k\cos\theta)}{(\mu_k\,\sin\theta + \cos\theta)}$$

$$= \frac{5(\sin 30° - 0.4\cos 30°)}{(0.4\,\sin 30° + \cos 30°)}$$

$$\therefore F_{min} = \mathbf{0.72N}$$

4. a) Find the centroid of the following shaded region.

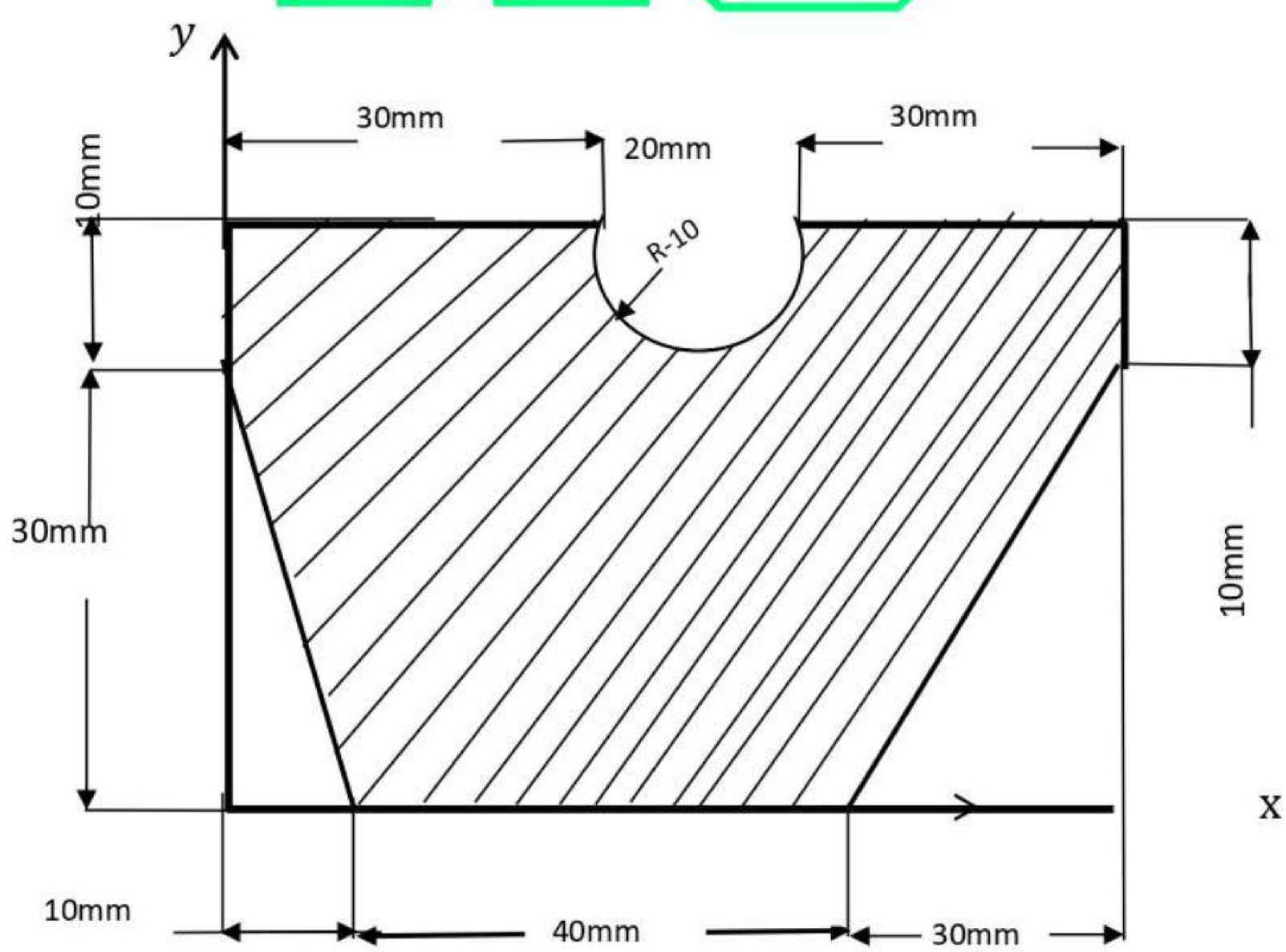

**Download from www.arjun00.com.np

Fig	$\overline{X}$	$\overline{Y}$	Area
1 (+ve)	$\frac{80}{2} = 40\ mm$	$\frac{40}{2} = 20\ mm$	$80 \times 40 = 3200\text{mm}^2$
2 (-ve)	$\frac{10}{3} = 3.33mm$	$\frac{30}{3} = 10\ mm$	$\frac{1}{2} \times 10 \times 30 = 150mm^2$
3 (-ve)	$50 + \frac{2 \times 30}{3} = 70\text{mm}$	$\frac{30}{3} = 10\ mm$	$\frac{1}{2} \times 30 \times 10 = 150mm^2$
4 (-ve)	$30 + \frac{20}{2} = 40\text{mm}$	$30 + (10 - \frac{4 \times 10}{3\pi}) = 35.756\ mm$	$\frac{1}{2}\pi(10)^2 = 157.079\text{mm}^2$

$$\overline{\mathbf{X}} = \frac{\sum AX}{\sum A} = \frac{A_1X_1 - A_2X_2 - A_3X_3 - A_4X_4}{A_1 - A_2 - A_3 - A_4}$$

$$= \frac{3200 \times 40 - 150 \times 3.33 - 150 \times 70 - 157.079 \times 40}{3200 - 150 - 150 - 157.079}$$

$$\overline{\mathbf{X}} = \mathbf{40.368\ mm}$$

Now,

$$\overline{\mathbf{Y}} = \frac{\sum AY}{\sum A} = \frac{A_1Y_1 - A_2Y_2 - A_3Y_3 - A_4Y_4}{A_1 - A_2 - A_3 - A_4}$$

$$= \frac{3200 \times 20 - 150 \times 10 - 150 \times 10 - 157.079 \times 35.756}{3200 - 150 - 150 - 157.079}$$

$$\overline{\mathbf{Y}} = \mathbf{20.191mm}$$

Hence, Centroid of shaded region $(\overline{\mathbf{X}}, \overline{\mathbf{Y}}) = (\mathbf{40.368}, \mathbf{20.191})\mathbf{mm}$

**Download from www.arjun00.com.np

b) Determine the moment of inertia about X-X and Y-Y axis.

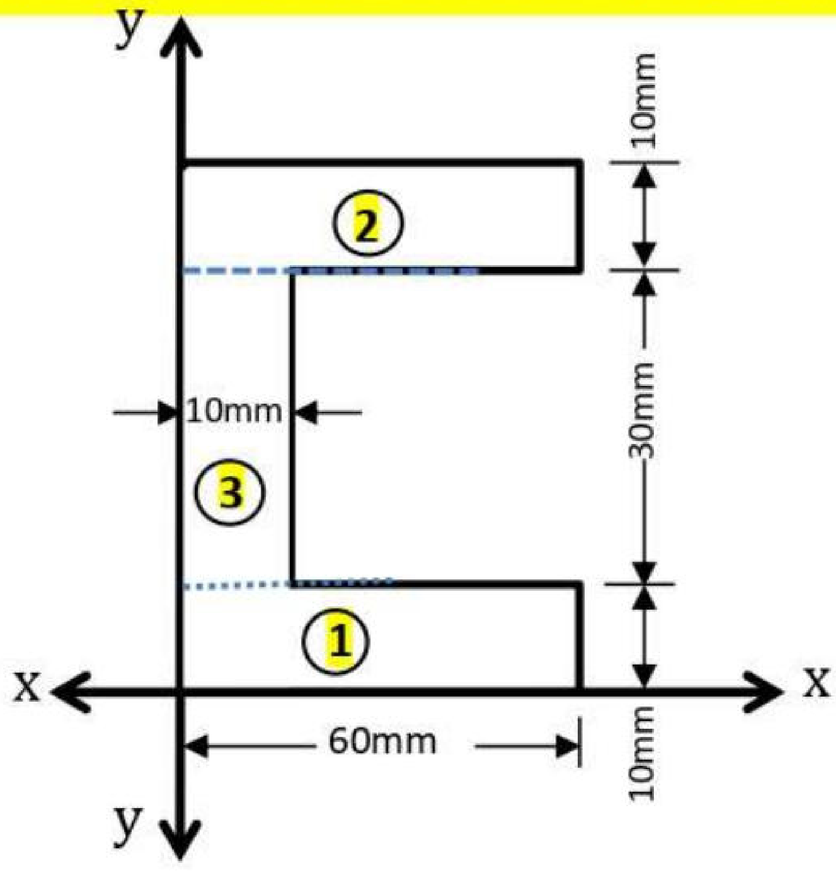

Fig	$\overline{X}$,mm	$\overline{Y}$,mm	Area, mm^2
1(+ve)	$\frac{60}{2} = 30$	$\frac{10}{2} = 5$	$60 \times 10 = 600$
2(+ve)	$\frac{60}{2} = 30$	$10 + 30 + \frac{10}{2} = 45$	$60 \times 10 = 600$
3(+ve)	$\frac{10}{2} = 5$	$10 + \frac{30}{2} = 25$	$30 \times 10 = 300$

$$\overline{X} = \frac{\sum AX}{\sum A} = \frac{A_1X_1 + A_2X_2 + A_3X_3}{A_1 + A_2 + A_3}$$

$$= \frac{600 \times 30 + 600 \times 30 + 300 \times 5}{600 + 600 + 300}$$

$$\overline{X} = 25\ mm$$

Now,

$$\overline{Y} = \frac{\sum AY}{\sum A} = \frac{A_1Y_1 + A_2Y_2 + A_3Y_3}{A_1 + A_2 + A_3}$$

**Download from www.arjun00.com.np

$$= \frac{600 \times 5 + 600 \times 45 + 300 \times 25}{600 + 600 + 300}$$

$$\bar{\mathbf{Y}} = 25 \text{ mm}$$

MOI about X-axis,

$$I_{X-X} = \left[\frac{bh^3}{12} + A_1(\bar{Y})^2\right] + \left[\frac{bh^3}{12} + A_2(\bar{Y})^2\right] + \left[\frac{bh^3}{12} + A_3(\bar{Y})^2\right]$$

$$= \left[\frac{60 \times 10^3}{12} + 600 \times (25)^2\right] + \left[\frac{60 \times 10^3}{12} + 600 \times (25)^2\right] + \left[\frac{10 \times 30^3}{12} + 300 \times (25)^2\right]$$

$$= 3.8 \times 10^5 + 3.8 \times 10^5 + 2.1 \times 10^5$$

$$\mathbf{I_{X-X} = 9.70 \times 10^5 \ mm^4}$$

MOI about Y-axis,

$$I_{Y-Y} = \left[\frac{hb^3}{12} + A_1(\bar{X})^2\right] + \left[\frac{hb^3}{12} + A_1(\bar{X})^2\right] + \left[\frac{hb^3}{12} + A_1(\bar{X})^2\right]$$

$$= \left[\frac{10 \times 60^3}{12} + 600 \times (25)^2\right] + \left[\frac{10 \times 60^3}{12} + 600 \times (25)^2\right] + \left[\frac{30 \times 10^3}{12} + 300 \times (25)^2\right]$$

$$= 0.555 \times 10^5 + 0.555 \times 10^5 + 1.9 \times 10^5$$

$$\mathbf{I_{Y-Y} = 3.01 \times 10^5 \ mm^4}$$

Hence, MOI About X-X and Y-Y are

$$\mathbf{I_{X-X} = 9.70 \times 10^5 \ mm^4}$$
$$\mathbf{I_{Y-Y} = 3.01 \times 10^5 \ mm^4}$$

**Download from www.arjun00.com.np

5. a) Define Beam. Discuss its type.

- A structural member designed to support loads applied at various points along with the member is known as *beam*.
- **The different types of beam are:-**
  - **Cantilever beam:-** A cantilever is a beam whose one end is fixed and the other end is free. AB is the length of cantilever.

  - **Simply supported beam:-** A beam which rests as one hinge support and other roller support.

  - **Over handing beam:-** An overhanging beam is one one or both the ends projects beyond the support.

  - **Fixed beam:-** A beam whose both ends are rigidly fixed or built into its supporting walls and columns.

  - **Continuous beam:-** This have more than two supports.

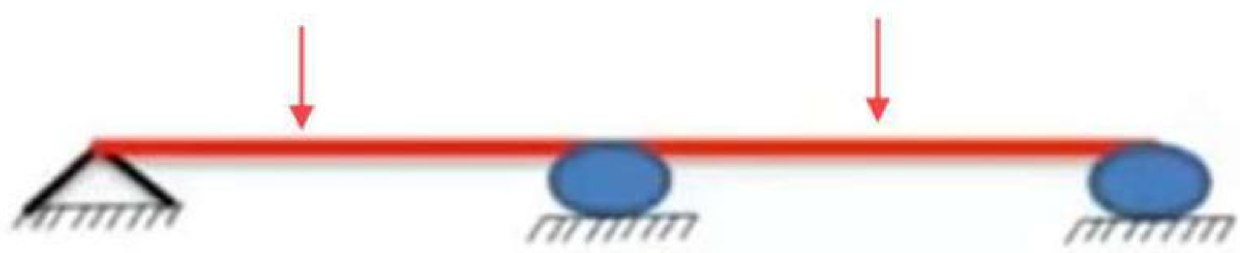

b) Find the support reactions of beam and draw shear force diagram and bending moment diagram.

**Download from www.arjun00.com.np

Let H_A & R_A be the horizontal reactions & Vertical reactions at support A. Let, R_F be the reaction at support F.

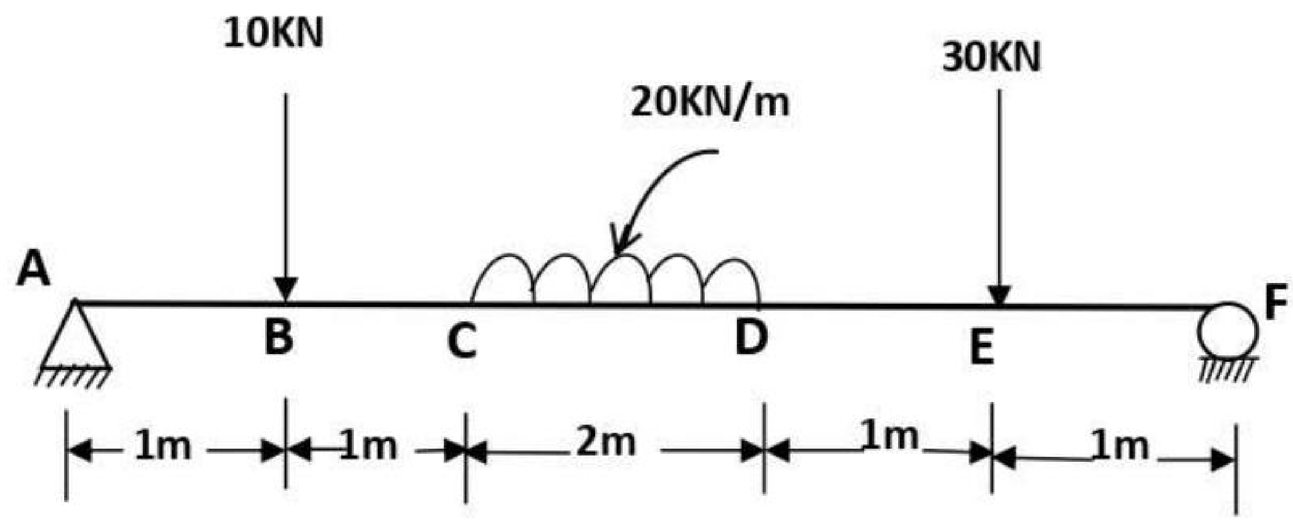

$$(\rightarrow) + ve \sum F_X = 0$$

$$\therefore H_A = 0$$

Taking moment at F ; we get,

$$(+\circlearrowleft) \sum M_F = 0$$

or, $10 \times 5 - R_A \times 6 + 20 \times 2 \times \left(\frac{2}{2} + 2\right) + 30 \times 1 = 0$

or, $R_A = \frac{200}{6}$

$\therefore \mathbf{R_A = 33.33\ kN}\ (\uparrow)$

and $\uparrow (+ve) \sum F_y = 0$

or, $R_A + R_F - 10 - 20 \times 2 - 30 = 0$

or, $R_F = 80 - 33.33$

$\therefore \mathbf{R_F = 46.67\ kN}\ (\uparrow)$

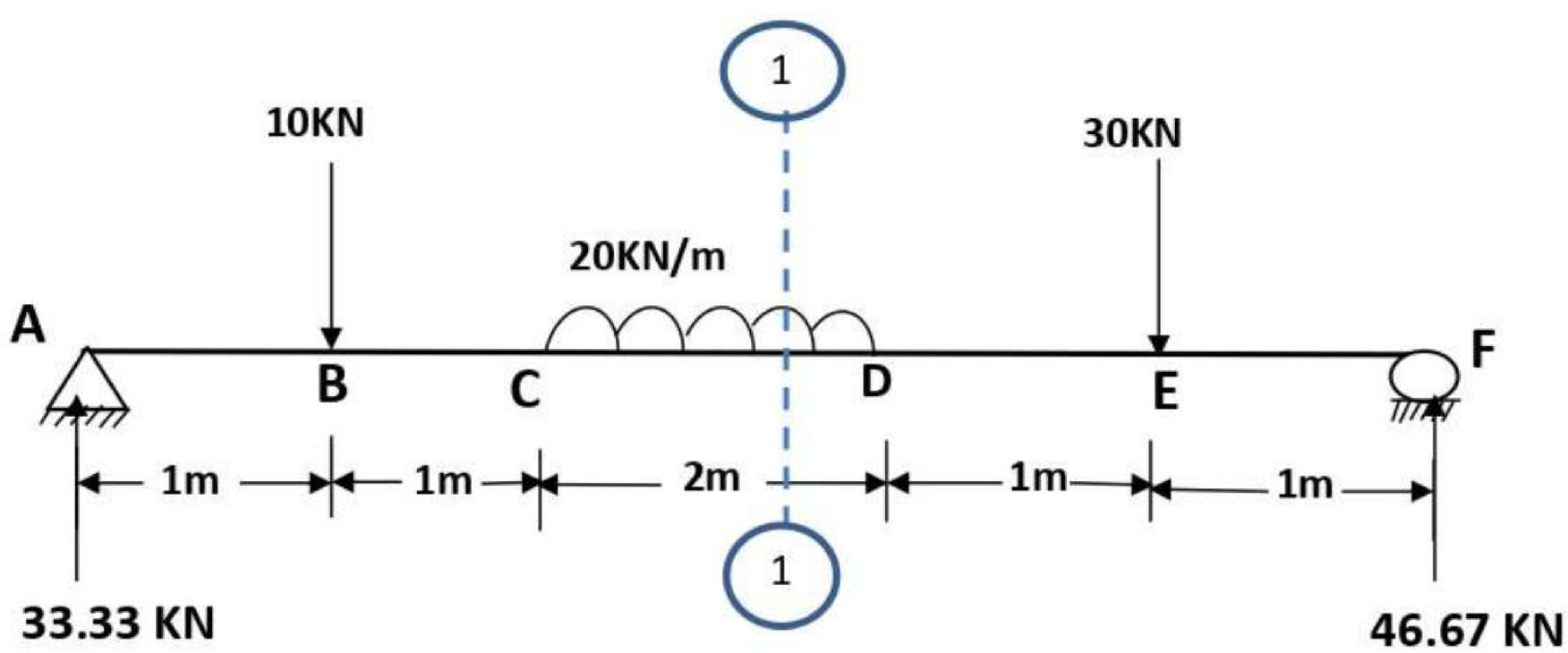

**Download from www.arjun00.com.np

➢ Calculation Of Shear Force and Bending Moment

For member CD:

Taking the left part of section (1)-(1)from x distance from C,

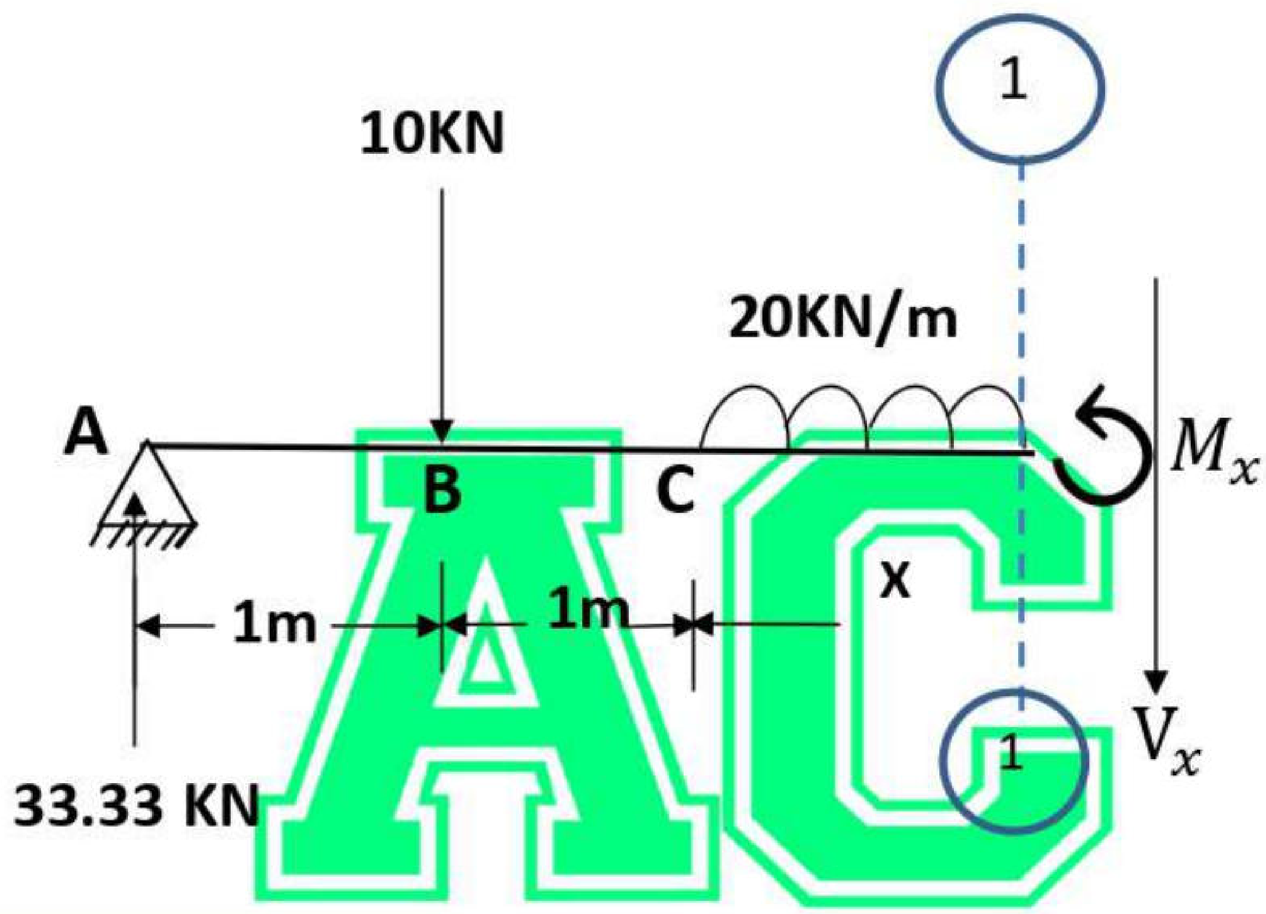

➢ Calculation Of SF and BM:

For member CD (UDL part), Shear Force:

Taking left side of section 1-1 at x from C ,

$$(\uparrow \ +\text{ve}) \sum F_y = 0,$$

$$33.33 - V_x - 10 - 20x = 0$$

Or, $V_x = 23.33 - 20x$ $\quad i.e.,$ SFD is linear $\qquad [\, x \in (0,2) \,]$

At $x = 0, V_x = V_C = 23.33 - 20 \times 0 = 23.33$ KN

At $x = 1, V_x = 23.33 - 20 \times 1 = -3.33$ KN

At $x = 2, V_x = V_D = 23.33 - 20 \times 2 = -16.67$ KN

Point Where $V_x = 0,\ i.e,\ SFD\ becomes\ Zero$

$$23.33 - 20x = 0$$

**Download from www.arjun00.com.np

$\therefore x = 1.665m\ from\ C$

Bending Moment ;

$$(+\circlearrowleft)\sum M_x = 0$$

$$M_x - 33.33(x+2) + 10(x+1) + 20x \times \frac{x}{2} = 0$$

$$M_x = 33.33x + 66.66 - 10x - 10 - 10x^2$$

$M_x = -10x^2 + 23.33x + 55.66$ i.e BMD is parabolic

At $\mathbf{x = 1.665}$, B max $= M_x = \mathbf{66.782\ KNm}$ **(Max)**

At $x = 0, M_x = \mathbf{M_C} = -10 \times 0^2 + 23.33 \times 0 + 55.66 = 55.66\ KNm$

At $x = 1, M_x = -10 \times 1^2 + 23.33 \times 1 + 55.66 = 68.99\ KNm$

At $x = 2, M_x = \mathbf{M_D} = -10 \times 2^2 + 23.33 \times 2 + 55.66 = 62.32$ KNm

➢ Calculation of Shear Force; From Left to right ($+ve\ \uparrow, \downarrow -ve$)

$A_L = 0KN$

$A_L = 33.33KN$

$B_L = 33.33KN$

$B_R = 33.33 - 10 = 23.33KN$

$C_L = 23.33KN$

$\boldsymbol{C_R = (23.33KN)}$

$\boldsymbol{D_L = 23.33 - 20 \times 2 = -16.67KN}$

$\boldsymbol{D_R = -16.67KN}$

$E_L = -16.67KN$

$E_L = -16.67 - 30 = \boldsymbol{-46.67KN}$

$F_L = -46.67KN$

$F_L = -46.67 + 46.67 = \boldsymbol{0KN}$

**Download from www.arjun00.com.np

➢ **Calculation of Bending Moment ;** From Left to right

$$\boldsymbol{M_A = 0KNm}$$
$$M_B = 33.33 \times 1 = 33.33KNm$$
$$M_C = 33.33 \times 2 - 10 \times 1 = 56.66KNm$$
$$M_D = 33.33 \times 4 - 10 \times 3 - 20 \times 2 \times 1 = 63.32\ KNm$$
$$M_E = 33.33 \times 5 - 10 \times 4 - 20 \times 2 \times (1 + 1) = 46.65\ KNm$$
$$\boldsymbol{M_F = 33.33 \times 6 - 10 \times 5 - 20 \times 2 \times (1 + 2) - 30 \times 1 = 0.02 \approx 0\ KNm}$$

Hence, S.F.D and B.M.D are as follows:

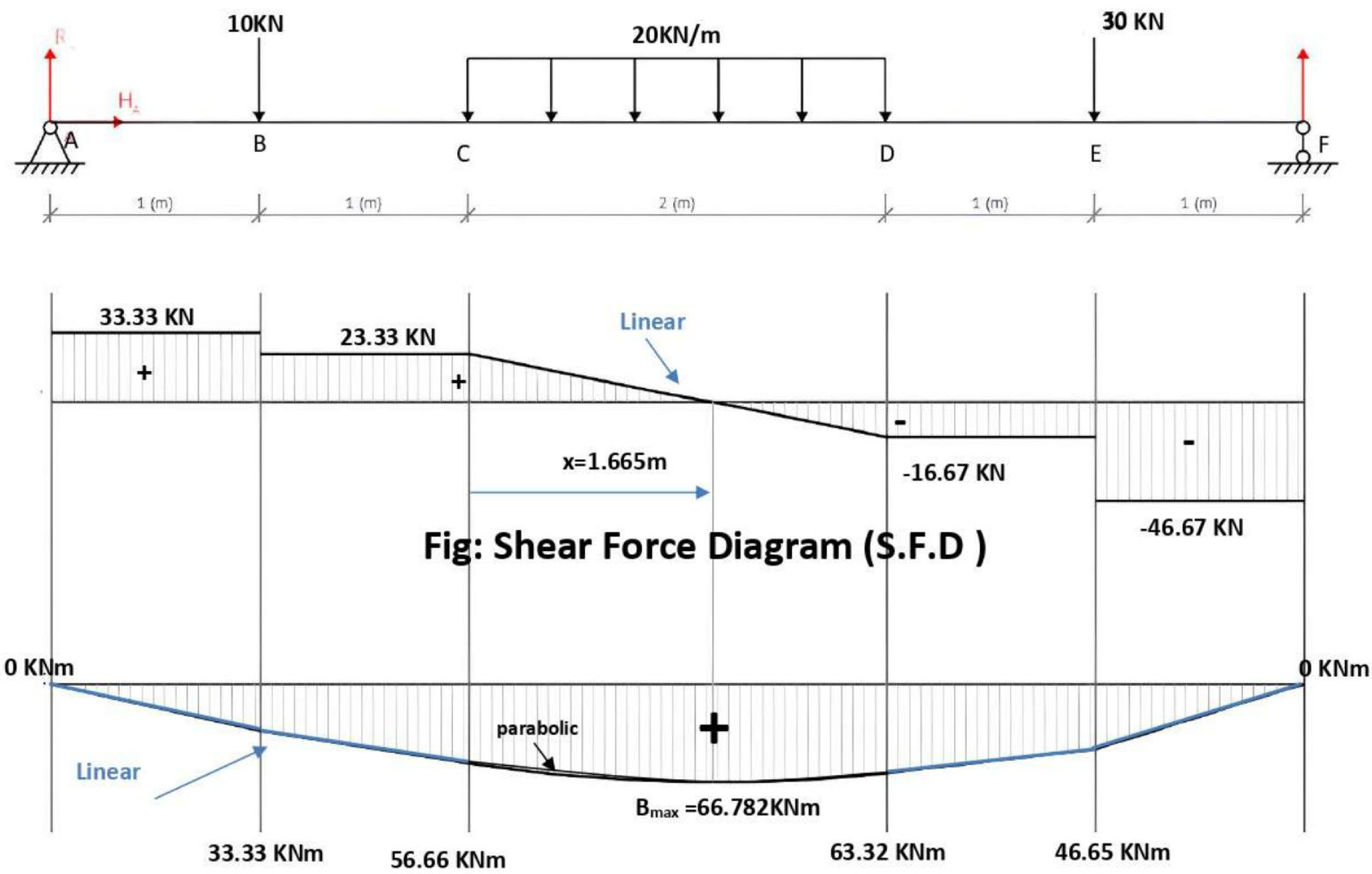

Fig: Shear Force Diagram (S.F.D)

Fig: Bending Moment Diagram (B.M.D)

**Download from www.arjun00.com.np

6. a) Differentiate structure and Mechanism. Also write down the condition for statically determinate beam.

Structure	Mechanism
There is no relative motion between the members of the structure.	There is a relative motion between the links of mechanism.
It is used to transmit forces.	It is used to transmit definite motion.
Only force transmission is desirable.	Both motion and force transmission is desirable.
Roof truss, bridge, etc.	Typewriter, clock, etc.

- A beam is considered statically determinate if the following condition **Equilibrium Equations Alone Can Solve for Unknown Reactions:-**
  All the unknown reactions at the supports and the internal forces within the beam can be uniquely determined **using only the three equations of static equilibrium** i.e, $\sum H = 0$, $\sum V = 0$, and $\sum M = 0$,(sum of forces in x dir^n = 0, sum of forces in y dir^n = 0, and sum of moments dir^n = 0).
  For example; simply supported beams, cantilever beams, single and double overhanging beam, three hinged arches, etc.

**Download from www.arjun00.com.np

b) Determine the forces in the member AB, AD and CE.

- **Find forces in member AB,AD and CE**

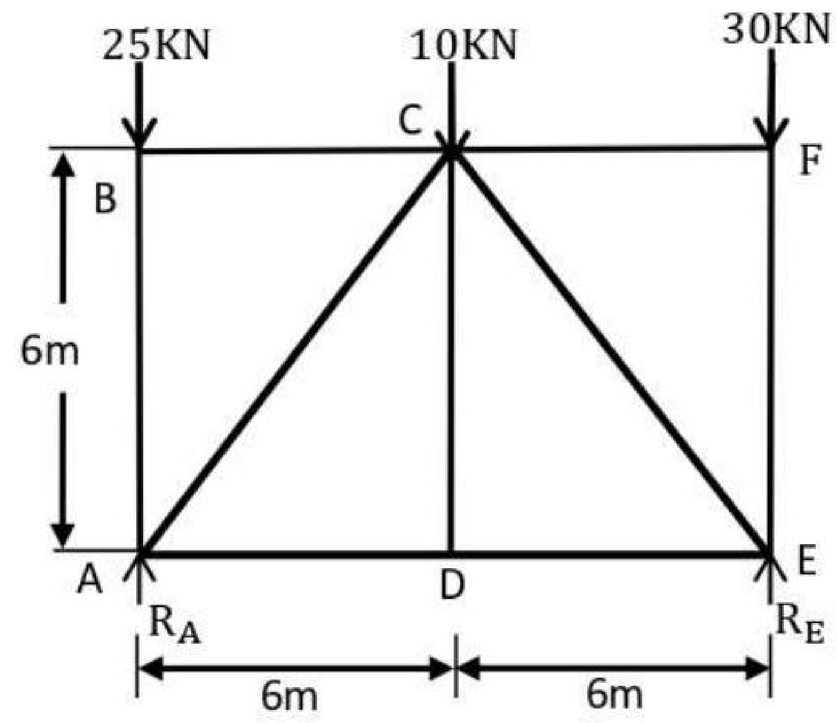

Taking moment at A we get,

$$(+\circlearrowleft)\sum M_A = 0$$

$$R_E \times 12 - 10 \times 6 - 30 \times 12 = 0$$

$$R_E = \frac{420}{12}$$

$$\therefore \mathbf{R_E = 35\ KN\ (\uparrow)}$$

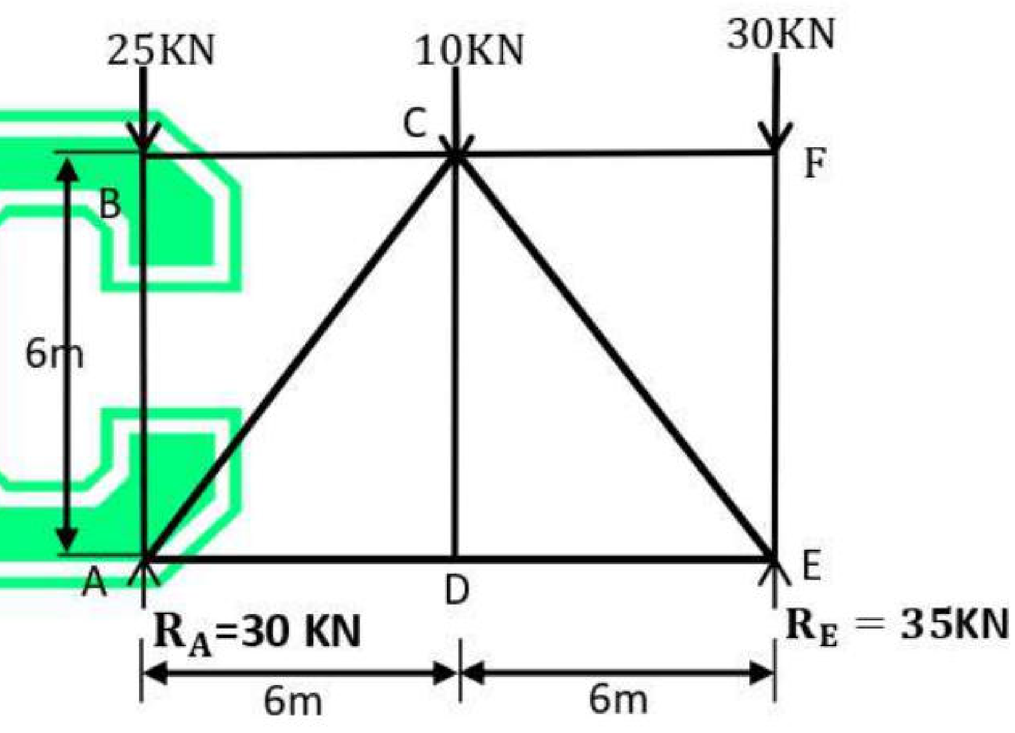

$$(\uparrow) + ve \sum F_Y = 0$$

$$R_A + R_E - 25 - 10 - 30 = 0$$

$$R_A + 35 - 65 = 0$$

$$\therefore \mathbf{R_A = 30\ KN\ (\uparrow)}$$

At Joint B

$$(\rightarrow) + ve \sum F_X = 0$$

$$R_{BC} = 0 \Rightarrow \therefore R_{BC} = 0$$

$$(\uparrow) + ve \sum F_Y = 0$$

$$-R_{BA} - 25 = 0 \quad \Rightarrow \mathbf{R_{BA} = -25\ KN}$$

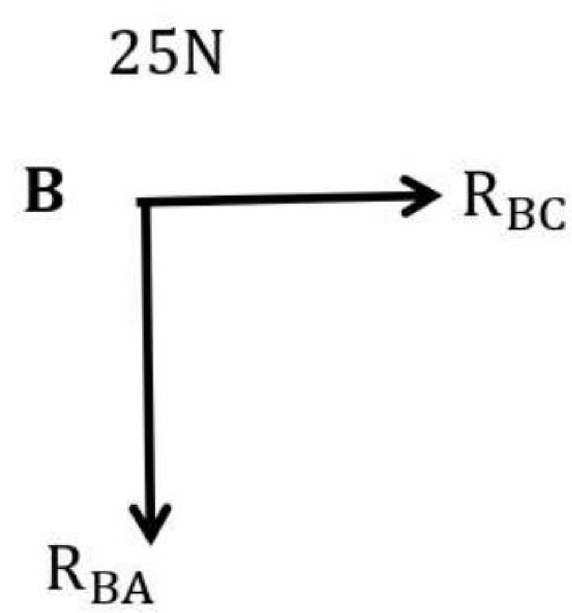

Fig: At joint B

**Download from www.arjun00.com.np

At joint A

$$(\uparrow) + ve \sum F_Y = 0$$

$$R_{AB} + 30 + R_{AC}\text{Sin}\theta = 0$$

$$-25 + 30 + R_{AC}\text{Sin}45 = 0$$

$$\Rightarrow \mathbf{R_{AC}} = -\frac{\mathbf{5}}{\frac{\mathbf{1}}{\sqrt{\mathbf{2}}}} = \mathbf{-5\sqrt{2}\,KN}$$

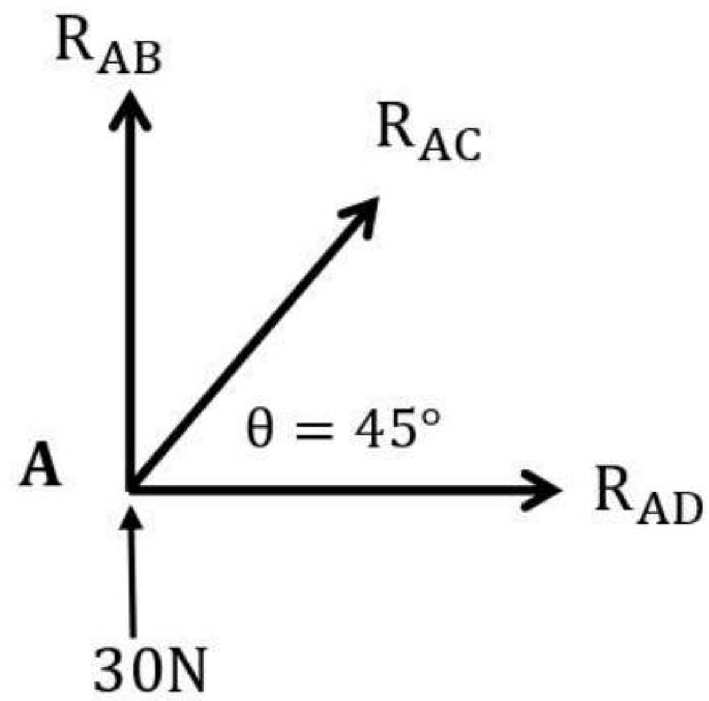

Fig: At joint A

$$(\rightarrow) + \boldsymbol{ve} \sum \mathbf{F_X} = \mathbf{0}$$

$$R_{AD} + R_{AC}\text{Cos}\theta = 0$$

$$R_{AD} + -5\sqrt{2}\,\text{Cos}45 = 0$$

$$\Rightarrow \mathbf{R_{AD}} = \mathbf{5KN}$$

At joint D

$$(\rightarrow) + ve \sum F_X = 0$$

$$-R_{DA} + R_{DE} = 0$$

$$-5 + R_{DE} = 0$$

$$\Rightarrow \mathbf{R_{DE}} = \mathbf{5\ KN}$$

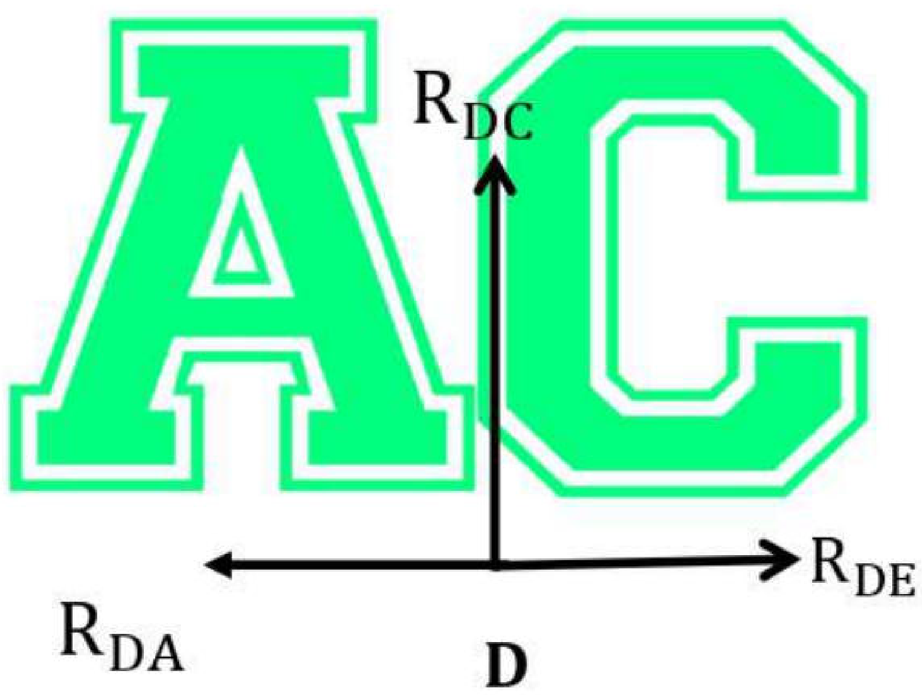

Fig: At joint D

At joint E

$$(\rightarrow) + ve \sum F_X = 0$$

$$-R_{ED} - R_{CE}\text{Cos}\theta = 0$$

$$-5 + R_{CE}\cos 45 = 0$$

$$\Rightarrow \mathbf{R_{CE}} = \mathbf{5\sqrt{2}\ KN}$$

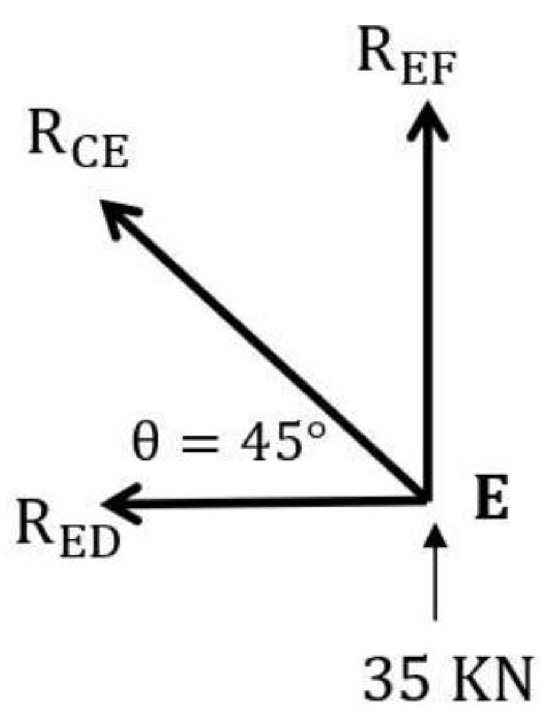

Fig: At joint E

**Download from www.arjun00.com.np

Hence,

Member	AB	AD	CE
Member Force(KN)	25(C)	5(T)	$5\sqrt{2}$ (T)

Where, (**C**) indicate the nature of force is **compressive**

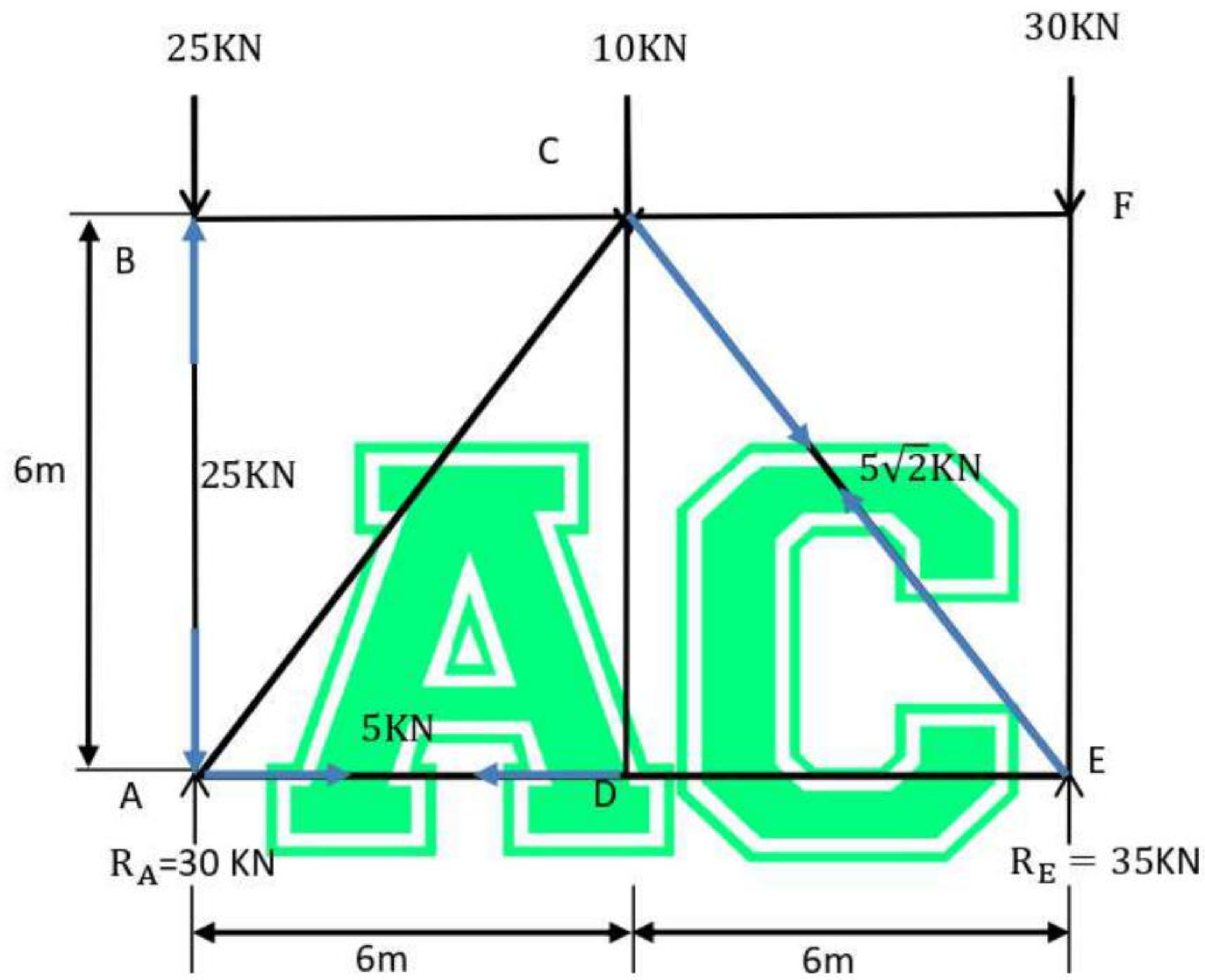

← The End →

Support us

A Small gift will help maintain this website. →

Feel Free to Read at no cost.

Support us on: fonepay

you can donate as you wish.

ARJUN CHAUDHARY
2222120014283943

**Download from www.arjun00.com.np

Applied Mechanics__(Engg. All) 3rd Sem

(2080/81 Back) Question Paper Solution.

Compile & Written by © Arjun Chy
Website :- www.arjun00.com.np
Facebook :-www.facebook.com/Arjun00.com.np

1. a) Define the applied mechanics. Classify the applied mechanics.

- **Applied mechanics** also known as engineering mechanics is the branch of engineering which deals with the laws of mechanics as applied to the Solution of engineering problems.

- **Classify of applied mechanics :-**

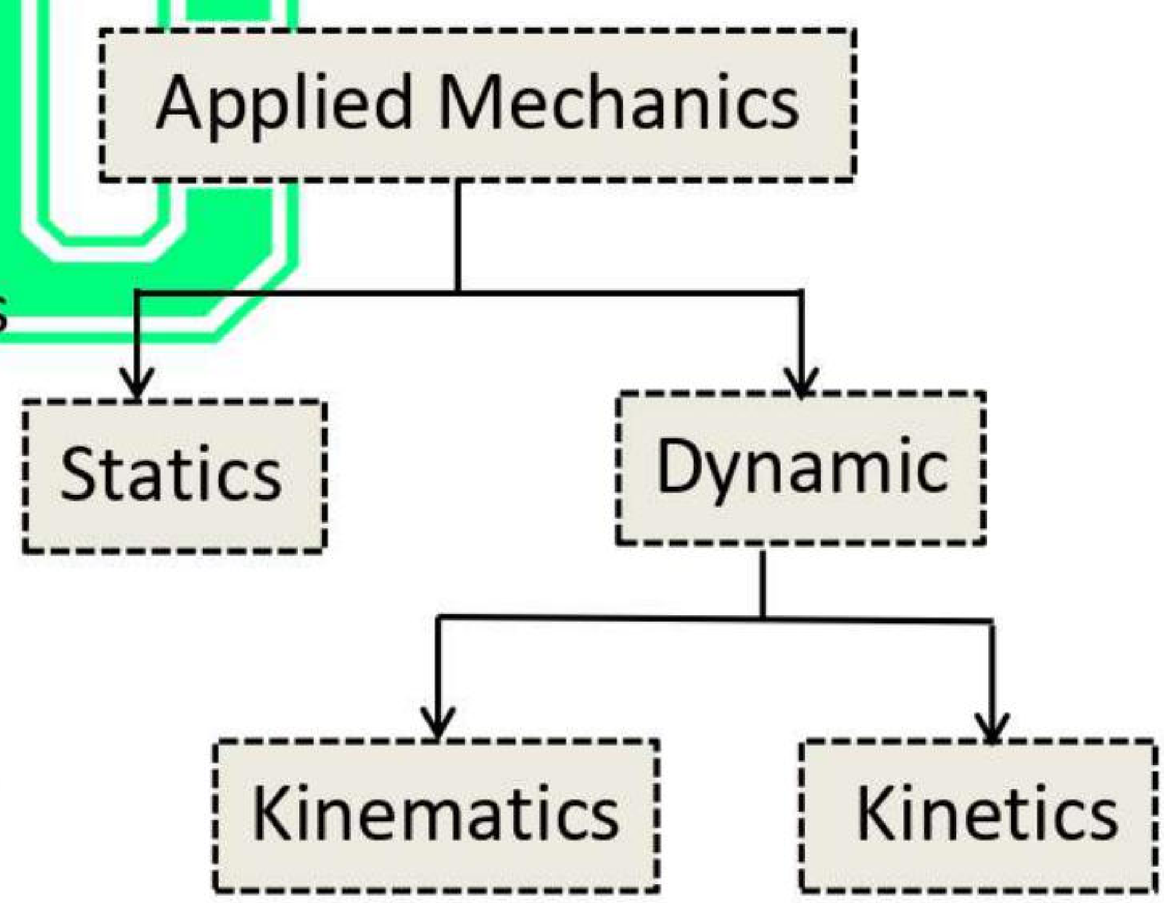

1) Statics :- The branch of applied mechanics which deals with the action of ***forces on bodies at rest*** is called statics.

2) Dynamics : - It is the branch of applied mechanics which deals with the **action of forces on bodies in motion.** Dynamics if further divided into two parts:-

a) kinematics :- The study of motion of bodies without considering the forces causing the motion is called kinematics.

b) Kinetics: The study of motion of bodies together with the forces causing the motion is called kinetics.

**Download from www.arjun00.com.np

b) A horizontal beam AB of length 9m is acted upon by a set of forces as shown in figure below. Determine the magnitude, direction and position of the resultant force.

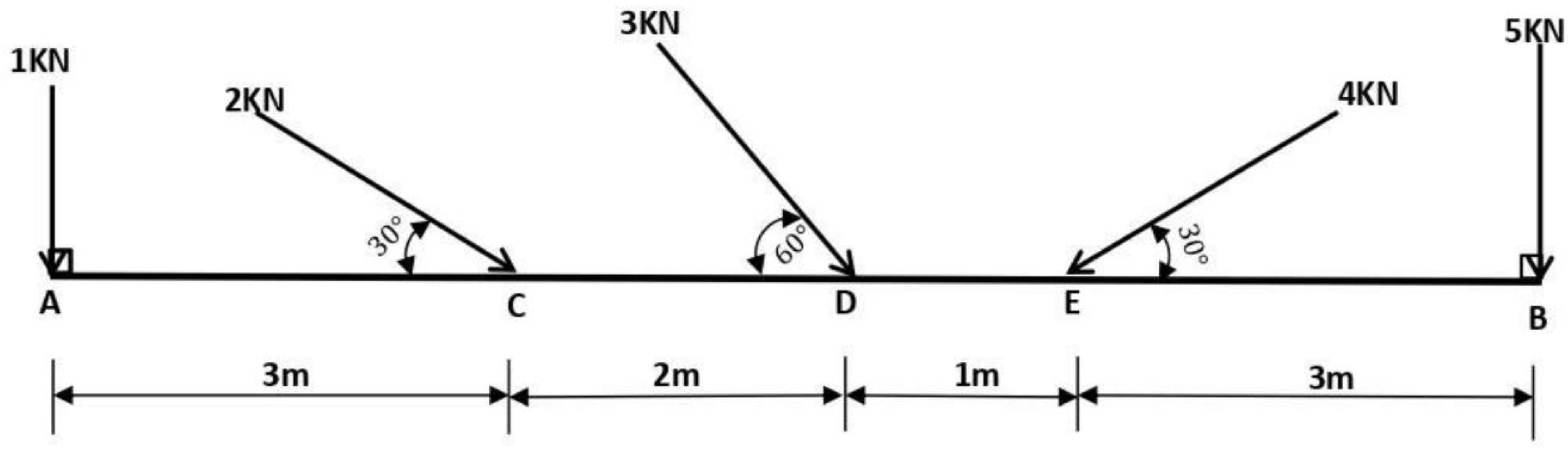

Resolving We get,

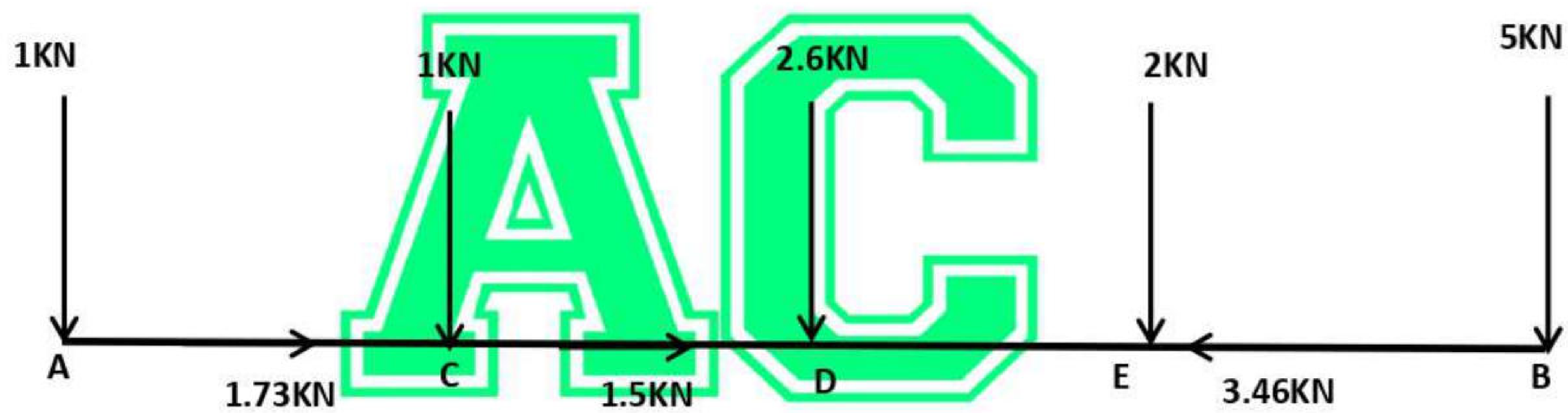

$$(\rightarrow \ +\text{ve})\sum F_x = 1.73 + 1.5 - 3.46 = \mathbf{-0.23\ KN}$$

$$(\uparrow \ +\text{ve})\sum F_y = -(1 + 1 + 2.6 + 2 + 5) = \mathbf{-11.6\ KN}$$

$$R = \sqrt{(\sum F_x)^2 + \left(\sum F_y\right)^2} = \mathbf{11.602\ KN}$$

$$\theta = \tan^{-1}\left(\frac{\sum F_y}{\sum F_x}\right) = \tan^{-1}\left(\frac{-11.6}{-0.23}\right) = \mathbf{88.86°}$$

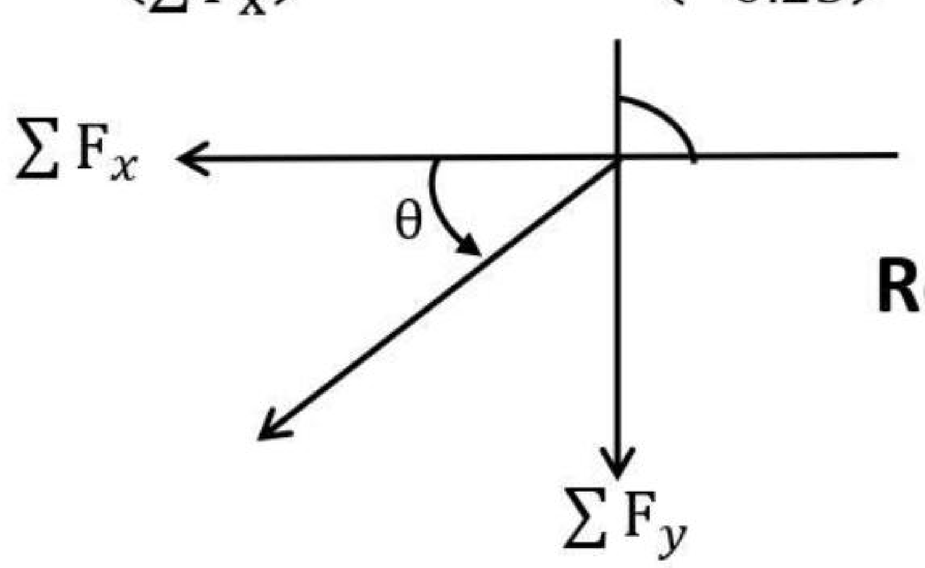

Resultant lies on third quadrant.

**Download from www.arjun00.com.np

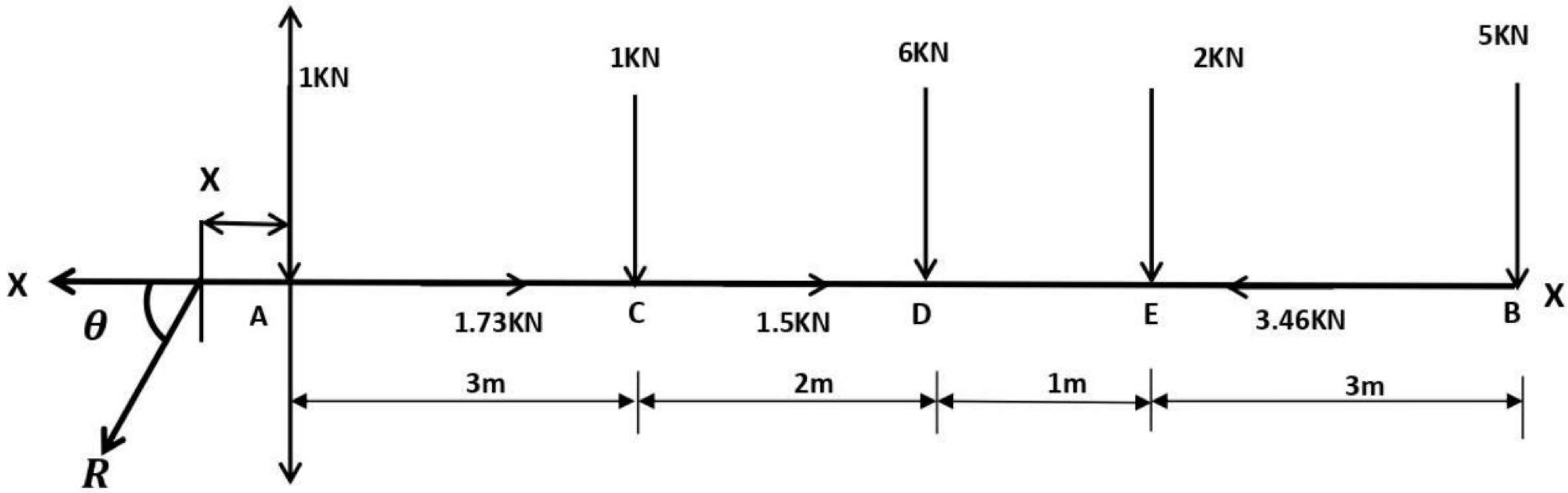

Taking moment at A

Moment of Resultant about A( ) = Sum of moment of individual for as about A( ))

$$R \sin 88° \times x = 1 \times 3 + 2.6 \times (3 + 1.5) + 2 \times (3 + 1.5 + 1) + 5 \times (3 + 1.5 + 1 + 3)$$

$$11.6 \sin 88° \times x = 68.2$$

$$x = 5.882 \text{ m for } A$$

2. a) State and prove the Lami's theorem and mention the application of Lami's theorem.

- **Statement**

"If three coplanar forces acting at a point be in equilibrium, then each force is proportional to the sine of the angle between the other two."

Mathematically;

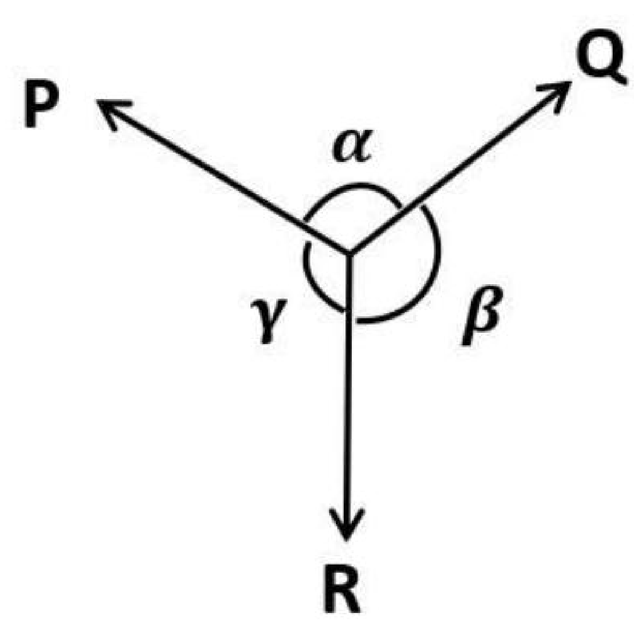

$$\frac{P}{\sin\beta} = \frac{Q}{\sin\gamma} = \frac{R}{\sin\alpha}$$

where, P, Q and R are three forces and β, γ, α are angles as shown in the figure.

**Download from www.arjun00.com.np

Proof

Let us consider three coplanar forces P, Q and R. Let the opposite angles of the three forces be β, γ and α respectively as in the figure.

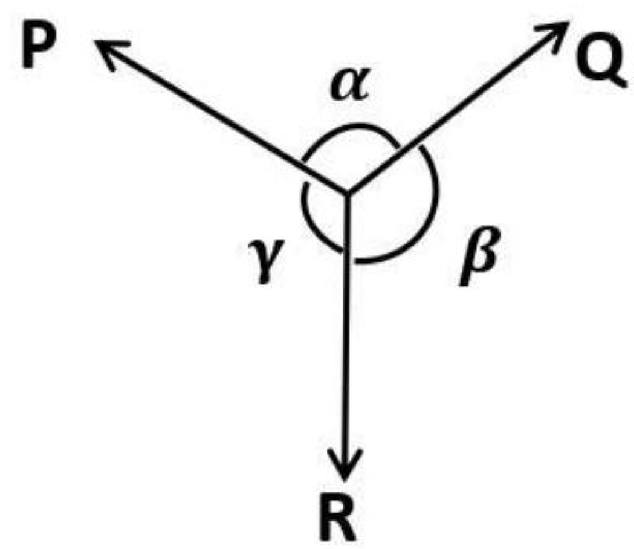

Forming triangle with these forces,

Let angle between Q & R force are 'β' $i.e.$, $\angle QOM$ = 'β'

,, angle between P & Q forces are 'α' $i.e.$, $\angle PNO$ = 'α'

,, angle between P & R forces are 'γ' $i.e.$, $\angle RMN$ = 'γ'

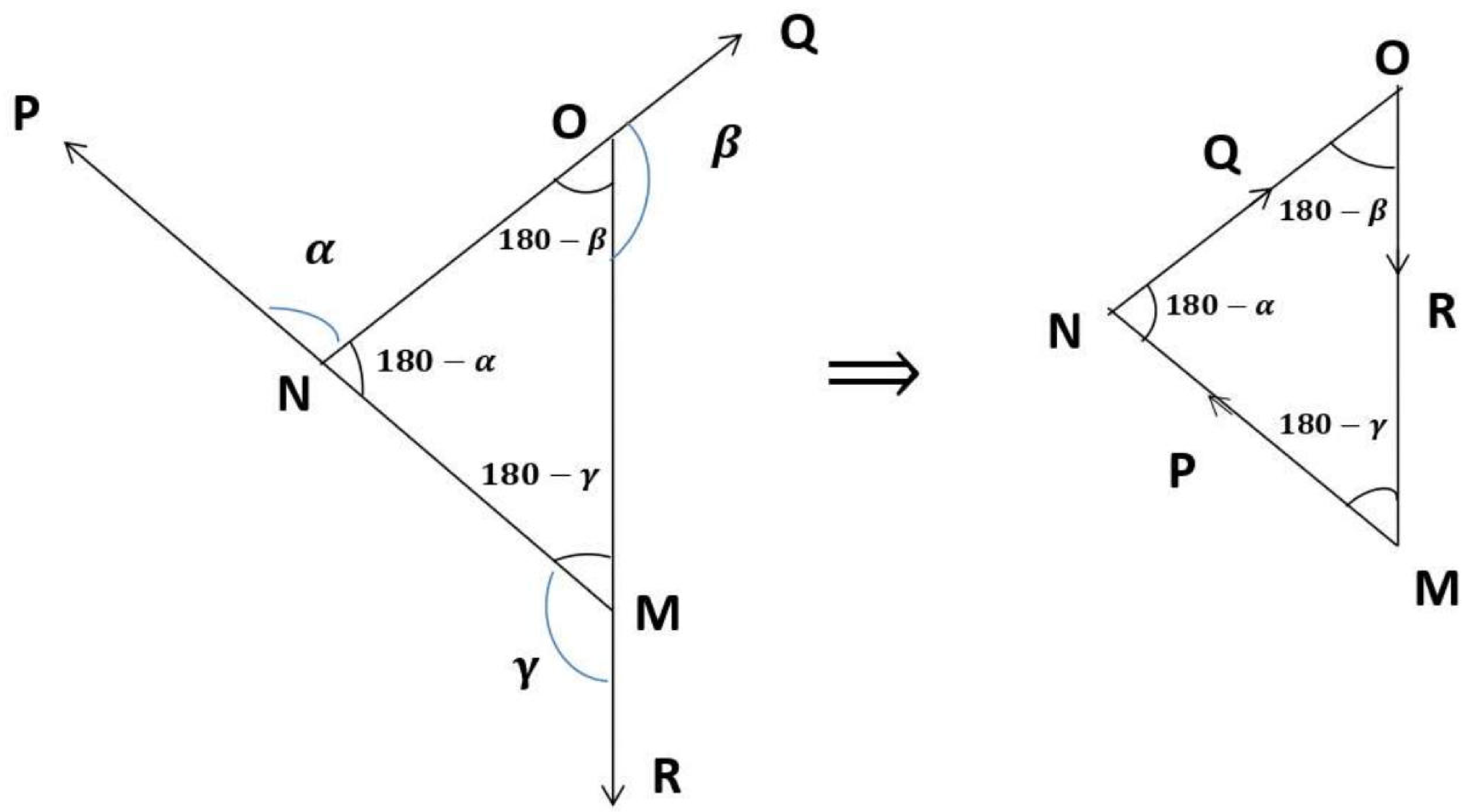

**Download from www.arjun00.com.np

Now,

$\angle MON = 180 - \angle PNO = 180 - \alpha$, $\angle NMO = 180 - \angle RMN = 180 - \gamma$, $\angle MON = 180 - \angle QOM = 180 - \beta$

Using Sine law in Δ MON

$$\frac{P}{\sin(\angle MON)} = \frac{Q}{\sin(\angle NMO)} = \frac{R}{\sin(\angle MNO)}$$

$$\frac{P}{\sin(180 - \beta)} = \frac{Q}{\sin(180 - \gamma)} = \frac{R}{\sin(180 - \alpha)}$$

$$\frac{P}{\sin\beta} = \frac{Q}{\sin\gamma} = \frac{R}{\sin\alpha}$$

Proved.

AC

b) A body weighing 5880 N is lying on a wooden plank with an inclination of 1 in 2. The coefficient of friction is 0.25. State if the body will rest on the plank or not. If the body moves down, what force parallel to plank is necessary to hold it back?

- **Solu:-**

$W = 5880N$

Inclination 1 in 2 $i.e$

Vertical to Horizontal $= 1:2$

Coefficient of Friction $\mu = 0.25$

$$\theta = \tan^{-1}\left(\frac{1}{2}\right) = 26.56\,°$$

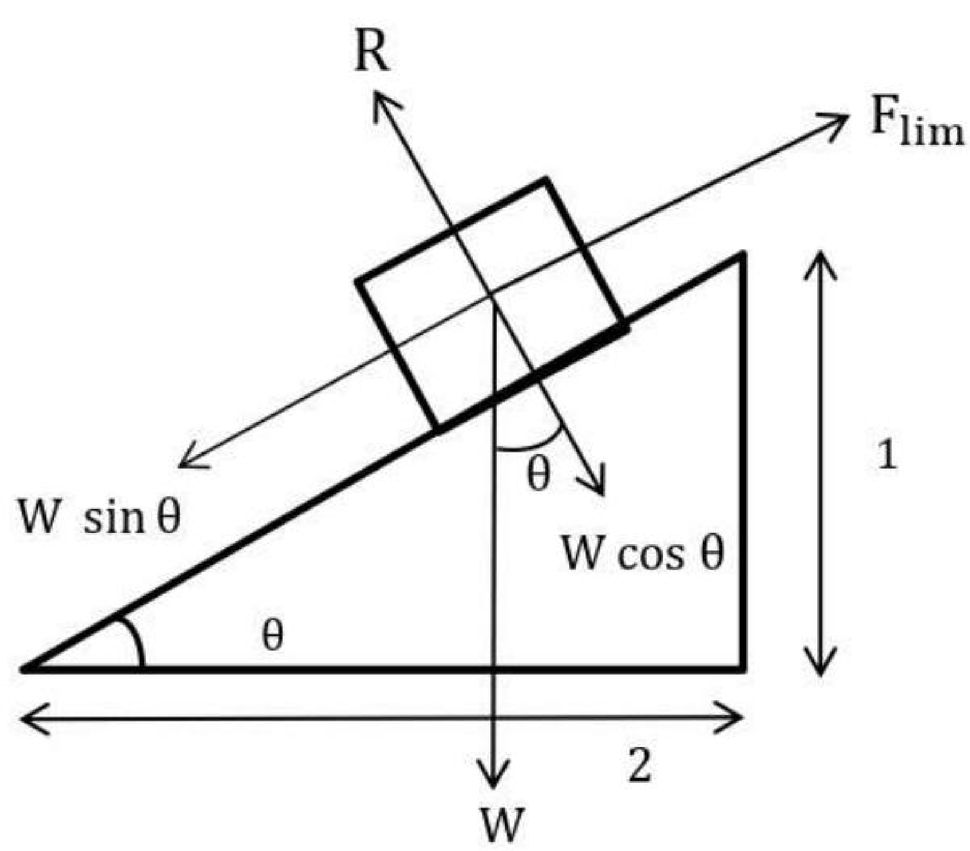

**Download from www.arjun00.com.np

Normal Reaction $R = W\cos\theta = 5880\cos(26.56°)$

$$\mathbf{R = 5259.463\ N}$$

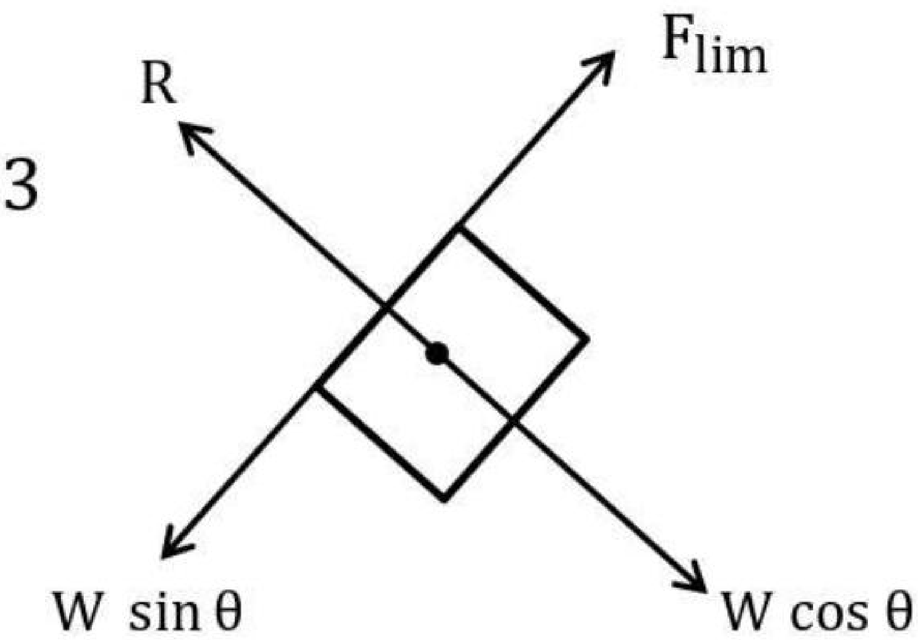

Limiting Friction, $F_{lim} = \mu . R = 0.25 \times 5259.463$

$$= \mathbf{1314.865\ N}$$

and

$W\,\text{Sin}\theta = 5259.463\ \text{Sin}\ (26{,}56°)$

$$= \mathbf{2351.688628\ N}$$

As

For Sliding, (From free body)

$$W\,\text{Sin}\theta > F_{lim}$$

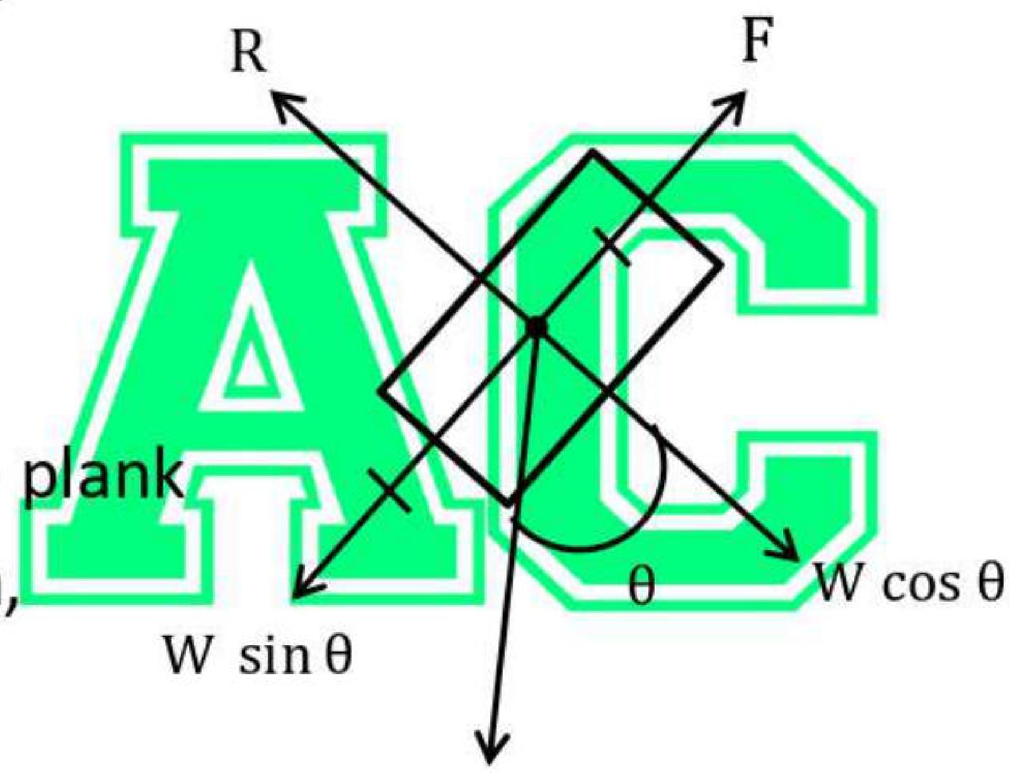

So,

Body will not rest on the plank

As the body moves down,

For equilibrium

The force required to hold it back $F = W\sin\theta$

$$= \mathbf{2351.68\ N}$$

**Download from www.arjun00.com.np

3. a) State and prove the parallel axis theorem.

- It states that "the moment of inertia of a plane area about any axis parallel to the centroidal axis is equal to the sum of moment of inertia about a parallel centroidal axis and the product of area and square of the distance between them ($i.e.$, to areas)." Mathematically;

$$I_{OO} = I_{XX} + A\bar{y}^2$$

- Let us consider a plane area 'A' having XX and YY centroidal axis as shown in figure. For this let us consider an axis parallel to XX axis at a distance $\bar{y}$ from this axis.

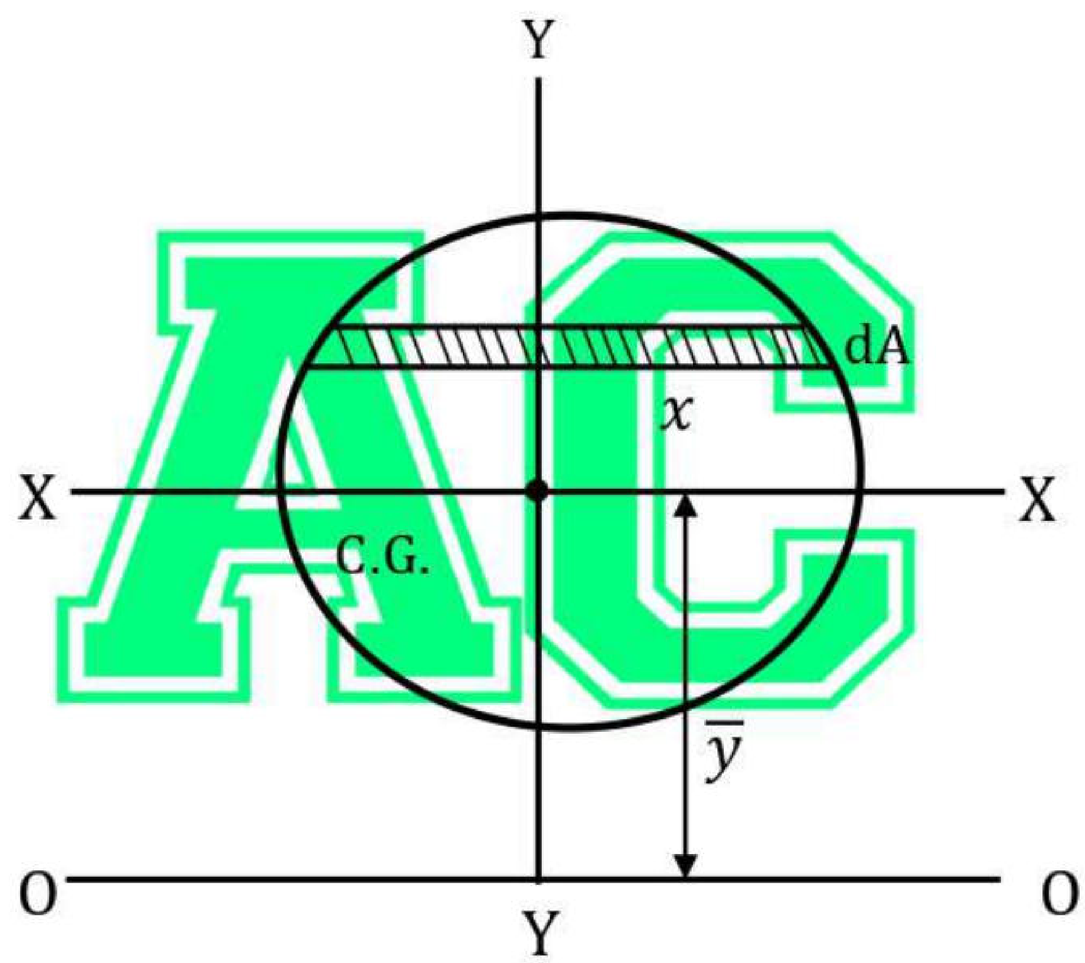

Take an elementary and dA at distance y form XX-axis.

We Know,

$$I_{XX} = \sum y^2 dA = \int y^2 dA$$

Also,

$$I_{\infty} = \sum (\bar{y} + y)^2 dA = \sum (\bar{y}^2 + 2\bar{y}y + y^2) dA$$

$$= \bar{y}^2 \sum dA + 2\bar{y} \sum y\, dA + \sum y^2\, dA = \bar{y}^2 \sum dA + 2\bar{y} \times 0 + I_{XX}$$

$$= \mathbf{I_{XX} + A\bar{y}^2} \qquad \left[\because \sum ydA = 0, because\ first\ moment\ of\ area\ about\ centroidal\ axis = 0\right]$$

**Download from www.arjun00.com.np

b) Find the reactions at support for given loaded beam as shown in below:

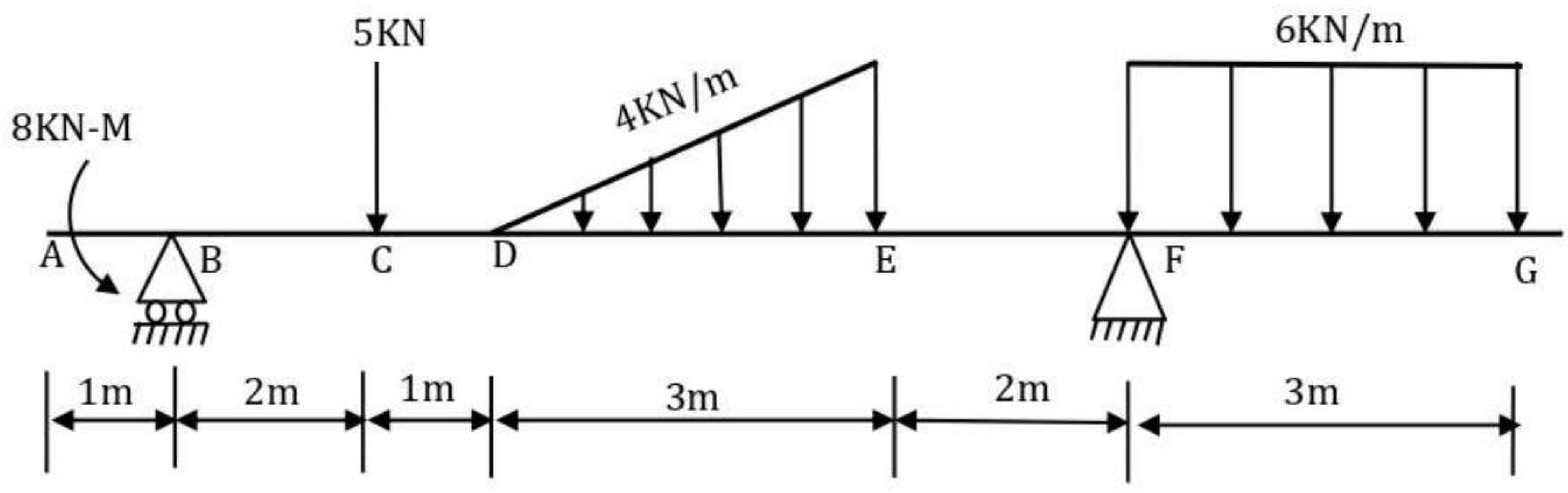

To Find :- Reactions at support

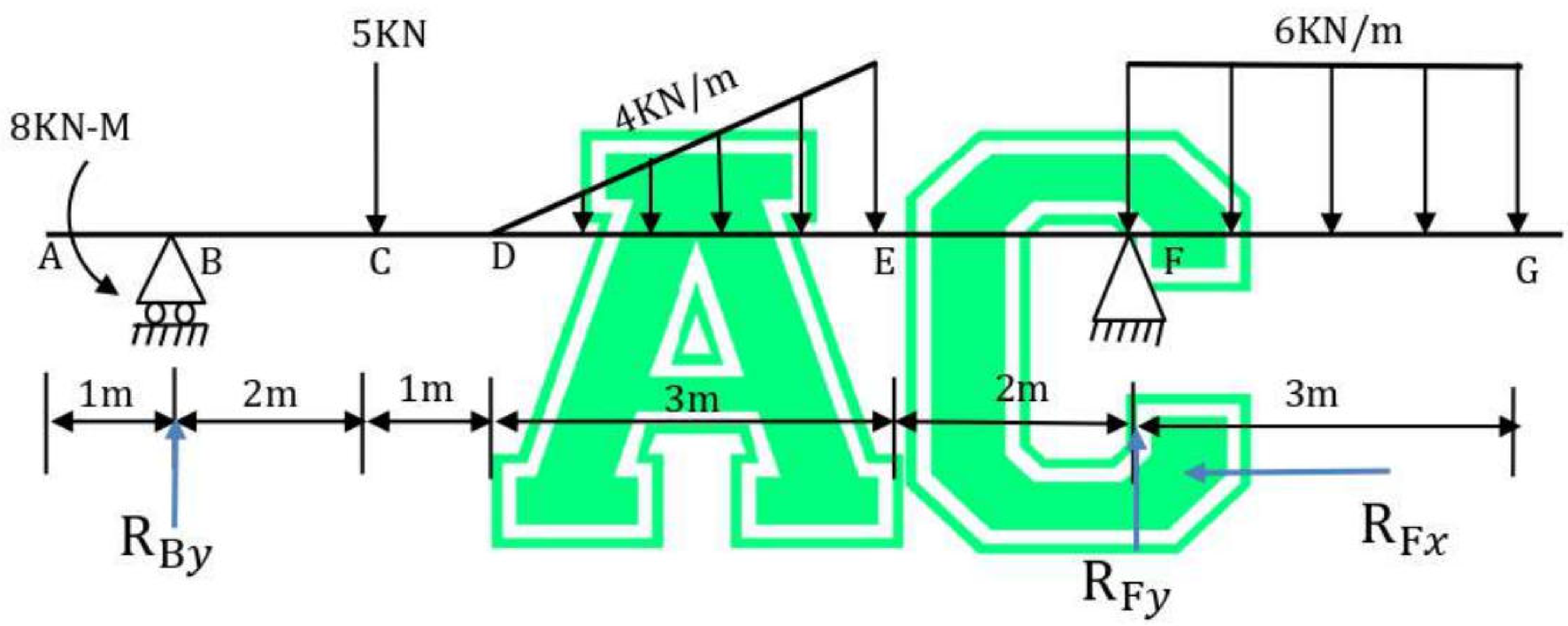

$$(+\circlearrowright)\sum M_F = 0$$

$$6\times 3\times 1.5 - \left(\frac{1}{2}\times 3\times 4\right)\left(\frac{3}{3}+2\right) - 5\times 6 + R_{By}\times 8 - 8 = 0$$

$$\Rightarrow \mathbf{R_{By} = 3.625\ KN}(\uparrow)$$

$$\sum F_y\ (\uparrow) + Ve = 0$$

$$R_{By} - 5 - \left(\frac{1}{2}\times 3\times 4\right) - 6\times 3 + R_{Fy} = 0$$

$$3.625 - 5 - 3\times 2 - 6\times 3 + R_{Fy} = 0$$

**Download from www.arjun00.com.np

$$\Rightarrow \mathbf{R_{By} = 5.375\ KN(\uparrow)}$$

$$\sum F_x\ (\rightarrow +Ve) = 0$$

$$-RF_x = 0$$

$$RF_x = 0$$

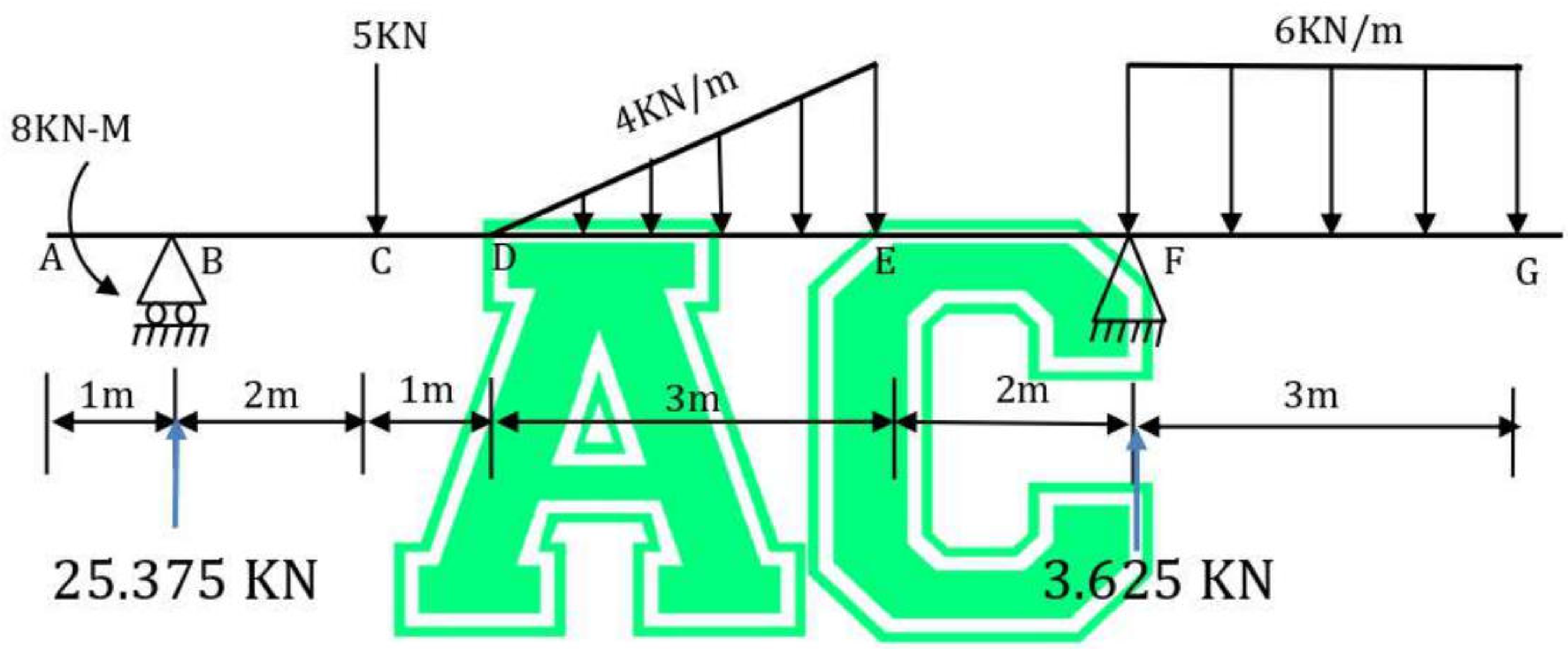

4. a) Define the types of support condition with neat sketch.

- To prevent motion in a structure when external forces are applied, we place support conditions which provide reactionary forces :-

a) Roller support

- Restrict only vertical translation.
- It gives rise to one force which is perpendicular to the plane supporting the plane.

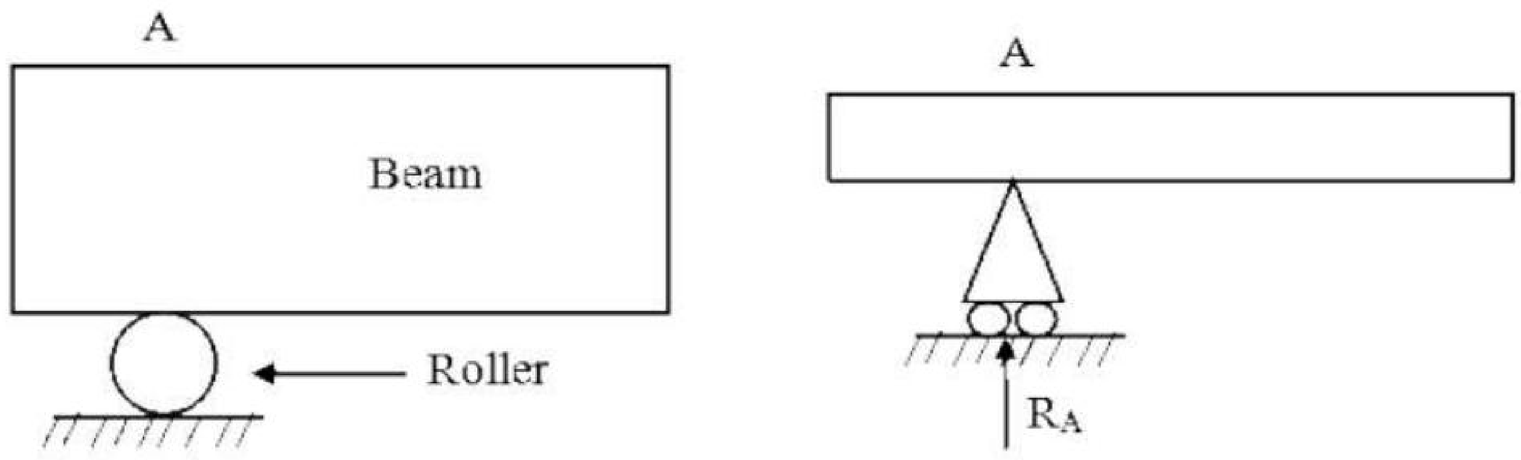

No. of reaction = 1

**Download from www.arjun00.com.np

b) Hinge support

- Restricts horizontal and vertical translation.
- It gives rise to one force reaction whose direction is unknown. It can be resolved into two forces along x and y axes.

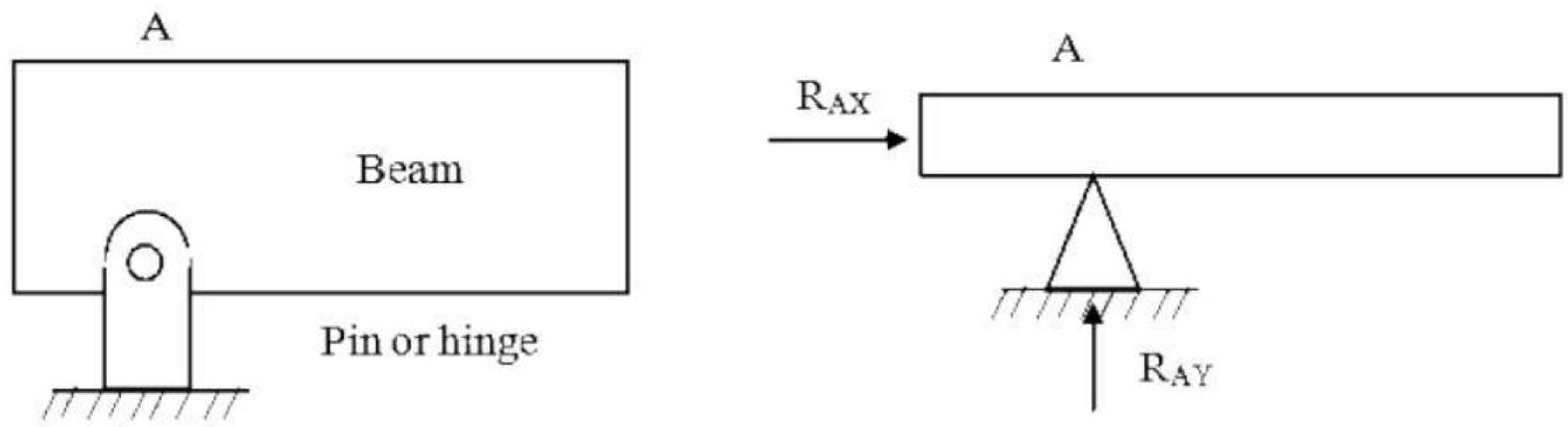

No. of reaction = 2

c) Fixed support

- Restrict horizontal and vertical as well as rotation.
- It gives rise to one force reaction (having two components) and one reaction moment.

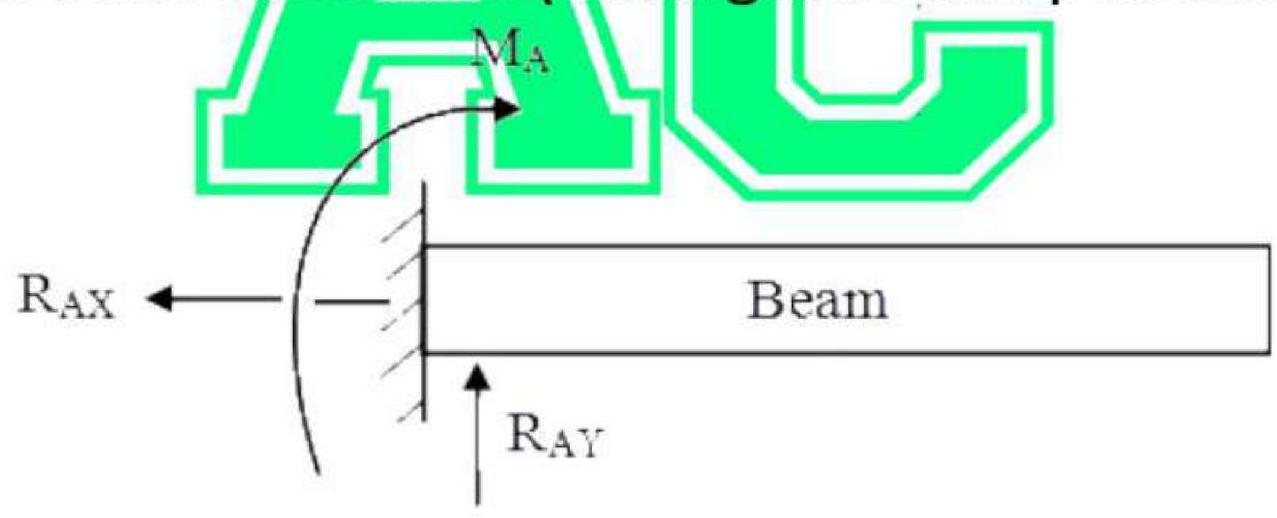

No. of reaction = 3

b) Determine the M.O.I. of the given area as shown in figure about centroidal XX and YY axes.

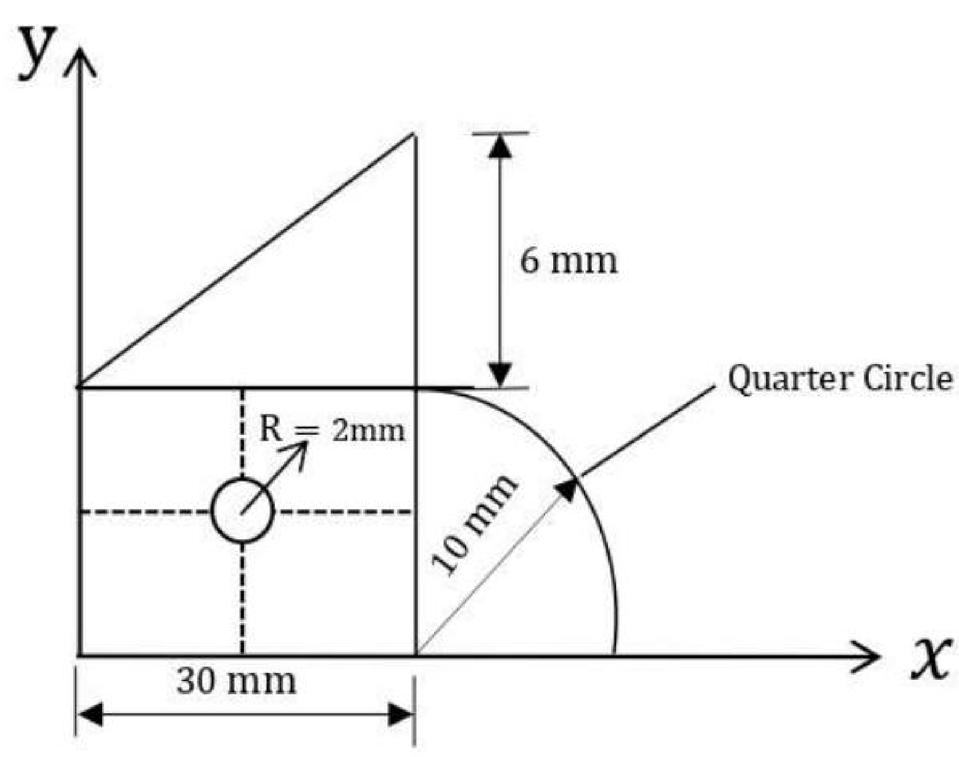

**Download from www.arjun00.com.np

- **Solution;**

The composite figure is divided into four parts. The reference axis is taken as given by the question.

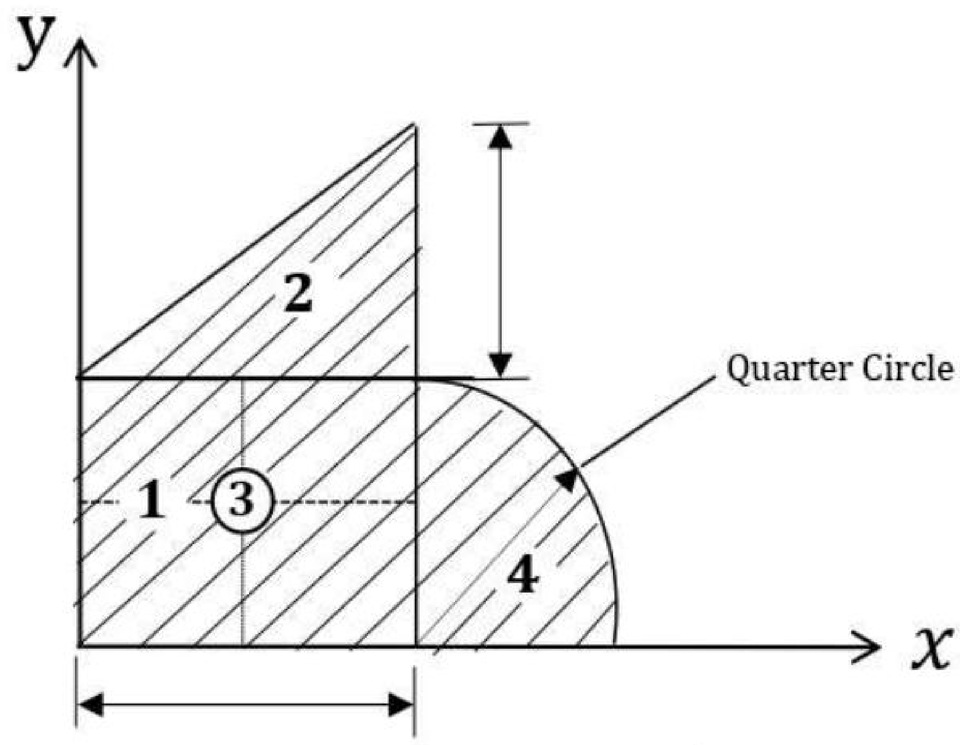

Fig	$\bar{X}$,mm	$\bar{Y}$,mm	Area, mm^2
1(+ve)	$\frac{30}{2} = 15$	$\frac{10}{2} = 5$	$30 \times 10 = 300$
2(+ve)	$\frac{2 \times 30}{3} = 20$	$10 + \frac{6}{3} = 12$	$\frac{1}{2} \times 30 \times 6 = 90$
3(-ve)	$\boldsymbol{\frac{30}{2} = 15}$	$\boldsymbol{\frac{10}{2} = 5}$	$\boldsymbol{\pi(2)^2 = 12.566}$
4(+ve)	$30 + \frac{4}{3\pi} \times 10 = 34.24$	$\frac{4}{3\pi} \times 10 = 4.244$	$\frac{\pi(10)^2}{4} = 78.538$

$$\bar{X} = \frac{\sum AX}{\sum A} = \frac{A_1X_1 + A_2X_2 - A_3X_3 + A_4X_4}{A_1 + A_2 - A_3 + A_4}$$

$$= \frac{300 \times 15 + 90 \times 20 - 12.566 \times 15 + 78.538 \times 34.24}{300 + 90 - 12.566 + 78.538}$$

$$= \boldsymbol{19.301mm}$$

$$\bar{Y} = \frac{\sum AY}{\sum A} = \frac{A_1Y_1 + A_2Y_2 - A_3Y_3 + A_4Y_4}{A_1 + A_2 - A_3 + A_4}$$

**Download from www.arjun00.com.np

$$= \frac{300 \times 5 + 90 \times 12 - 12.566 \times 5 + 78.538 \times 4.244}{300 + 90 - 12.566 + 78.538}$$

$$\bar{Y} = 6.251mm$$

MOI about Centroidal X-axis,

$$I_{CX-CX} = \left[\frac{bh^3}{12} + A_1(\bar{Y} - Y_1)^2\right] + \left[\frac{bh^3}{36} + A_2(\bar{Y} - Y_2)^2\right] -$$

$$\left[\frac{\pi r^4}{4} + A_3(\bar{Y} - Y_3)^2\right] + \left[0.055r^4 + A_3(\bar{Y} - Y_3)^2\right]$$

$$= \left[\frac{30 \times 10^3}{12} + 300 \times (6.251 - 5)^2\right] + \left[\frac{30 \times 6^3}{36} + 90 \times (6.251 - 12)^2\right]$$

$$- \left[\frac{\pi \times 2^4}{4} + 12.566(6.251 - 5)^2\right] + [0.055 \times 3^4 + 78.538(6.251 - 4.244)^2]$$

$$= 2969.500 + 3154.590 - 31.116 + 320.809$$

$$\therefore I_{CX-CX} = 6413.783 \text{ mm}^4$$

MOI about Centroidal Y-axis,

$$I_{CY-CY} = \left[\frac{h\,b^3}{12} + A_1(\bar{X} - X_1)^2\right] + \left[\frac{h\,b^3}{36} + A_2(\bar{X} - X_2)^2\right] -$$

$$\left[\frac{\pi r^4}{4} + A_3(\bar{X} - X_3)^2\right] + \left[0.055r^4 + A_3(\bar{X} - X_3)^2\right]$$

$$= \left[\frac{10 \times 30^3}{12} + 300 \times (19.301 - 15)^2\right] + \left[\frac{6 \times 30^3}{36} + 90 \times (19.301 - 20)^2\right]$$

$$- \left[\frac{\pi \times 2^4}{4} + 12.566(19.301 - 15)^2\right] + [0.055 \times 3^4 + 78.538(19.301 - 34.244)^2]$$

$$= 28049.580 + 4543.974 - 245.019 + 17541.460$$

$$I_{CY-CY} = 40793.047 \text{ mm}^4$$

**Download from www.arjun00.com.np

b) Find the reactions at support for given loaded beam as shown in below:

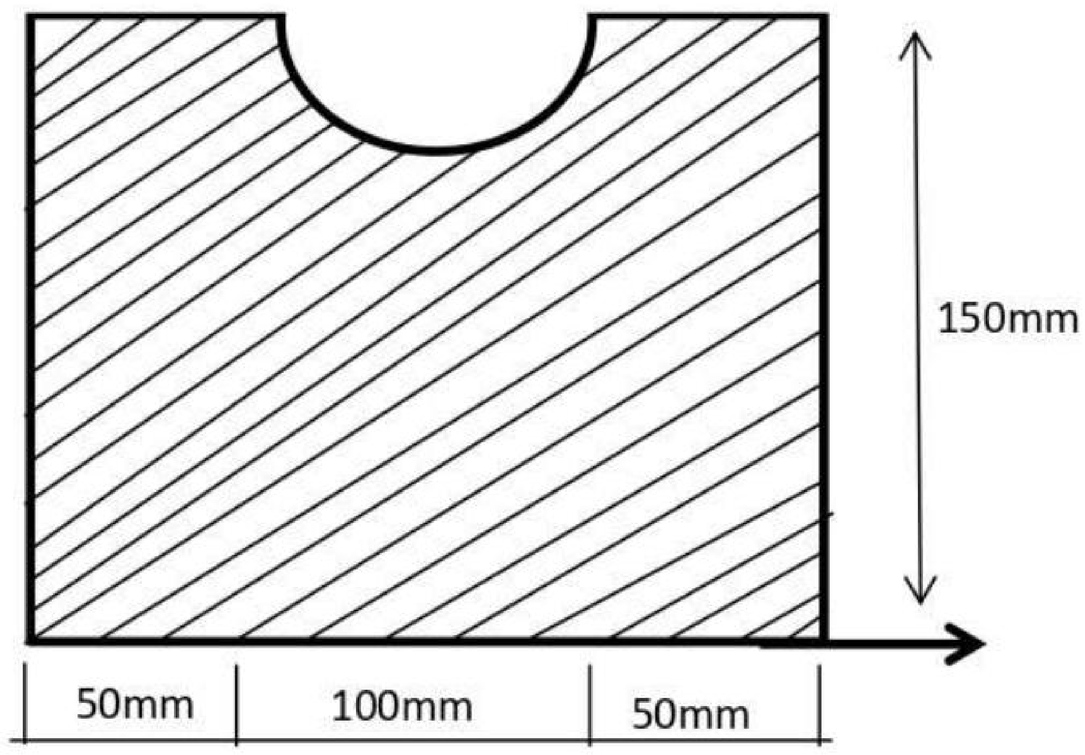

Solution:

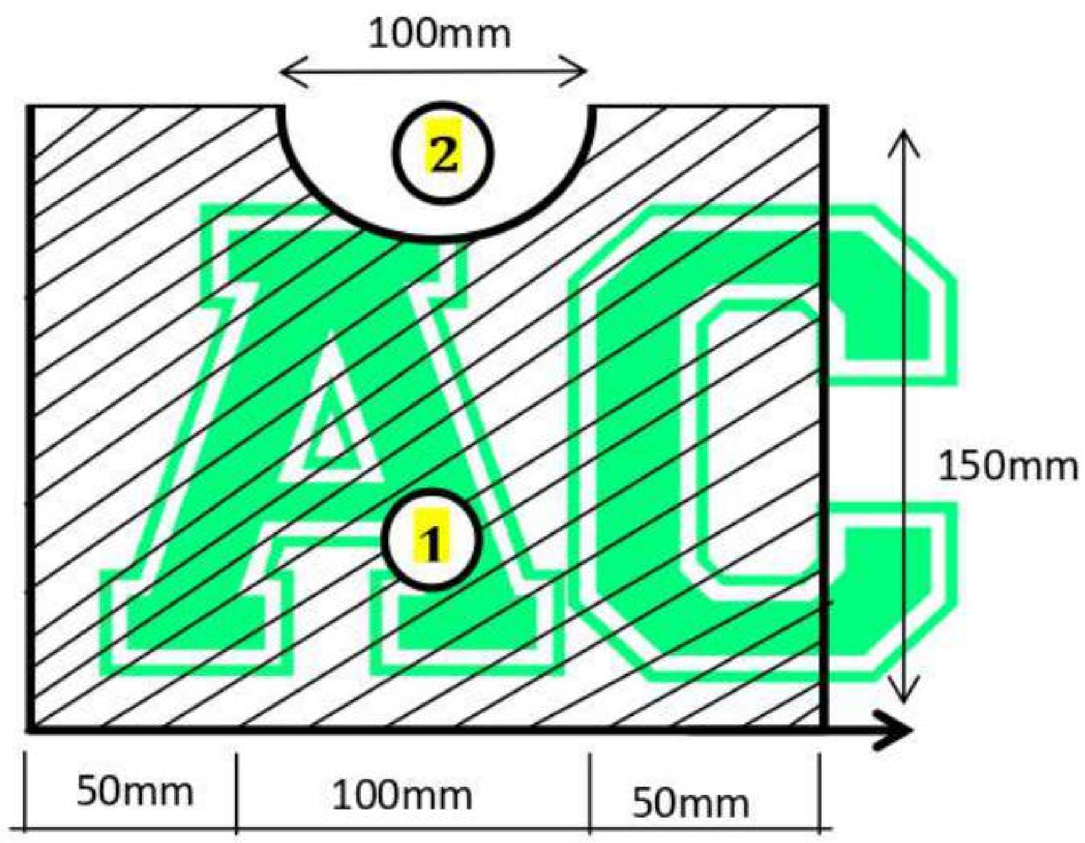

Fig	$\overline{X}$,mm	$\overline{Y}$,mm	Area, mm^2
1(+ve)	$\frac{200}{2} = 100$	$\frac{150}{2} = 75$	$200 \times 150 = 30000$
2(-ve)	$50 + \frac{100}{2} = 100$	$150 - \left(100 - \frac{3}{4\pi} \times 50\right) = 61.94$	$\frac{\pi(50)^2}{2} = 3926.99$

$$\overline{X} = \frac{A_1X_1 - A_2X_2}{A_1 - A_2} = \frac{30000 \times 100 - 300 \times 3926.99}{30000 - 3926.99}$$

$$\overline{X} = 69.876 \text{ mm}$$

**Download from www.arjun00.com.np

$$\bar{Y} = \frac{A_1X_1 - A_2X_2}{A_1 - A_2}$$

$$= \frac{30000 \times 75 - 3926.99 \times 61.94}{30000 - 3926.99}$$

$$\bar{Y} = 76.967 \text{ mm}$$

Hence,

The Centroid of the shaded plane area $(\bar{X}, \bar{Y}) = (69.876, 76.967)$mm

b) Define truss. Differentiate between method of joint and method of section.

- A Structure made up of several members connected to each other is known as truss.

Method of Joint	Method of Section
Only two equations i.e., $\sum F_x \Rightarrow 0$, & $\sum F_y \Rightarrow 0$ can be used in Method of Joint.	All three equilibrium equations i.e., $\sum F_x \Rightarrow 0$, & $\sum F_y \Rightarrow 0$ & $\sum M \Rightarrow 0$ can be used in Method of Section.
Method of Joint is used for up to two unknown member in a section.	Method of Section is used for up to three unknown member in a section.
The method is difficult to analyze compound truss.	The method is easy to analyze compound truss.
This method is not used to check member force.	This method is used to check member force calculated by Method of Joint.
While selecting the Joint for calculation, there should not contain more than two member in which force are unknown.	The method is used for calculating more than two member force.

**Download from www.arjun00.com.np

6. Write short notes on: (any FOUR)

a) Scope of applied mechanics

➢ **The Scope of applied mechanics :-**

- It is coupled with more specialized knowledge subject such as strength of materials, theory of structure, hydrostatics, etc.
- It is foundation and an indispensable pre-requisite to the study of most engineering sciences.
- It is used in the analysis of forces acting on roof and bridge, truss, rocket propulsion, etc.
- Basics for study and understand structural engineering design of buildings.

b) Free body diagram

➢ The force analysis of a structure is made in a simplified way by considering the equilibrium of a portion of the structure. For that, the portion is drawn separately showing applied forces, self-weight and reactions at the point of contact with other bodies. The resulting diagram is known as **Free Body Diagram** (FBD). So, FBD is a sketch of body (space diagram) drawn in such a way that it shows all the reaction forces, applied forces and moments on the body.

For Example :-

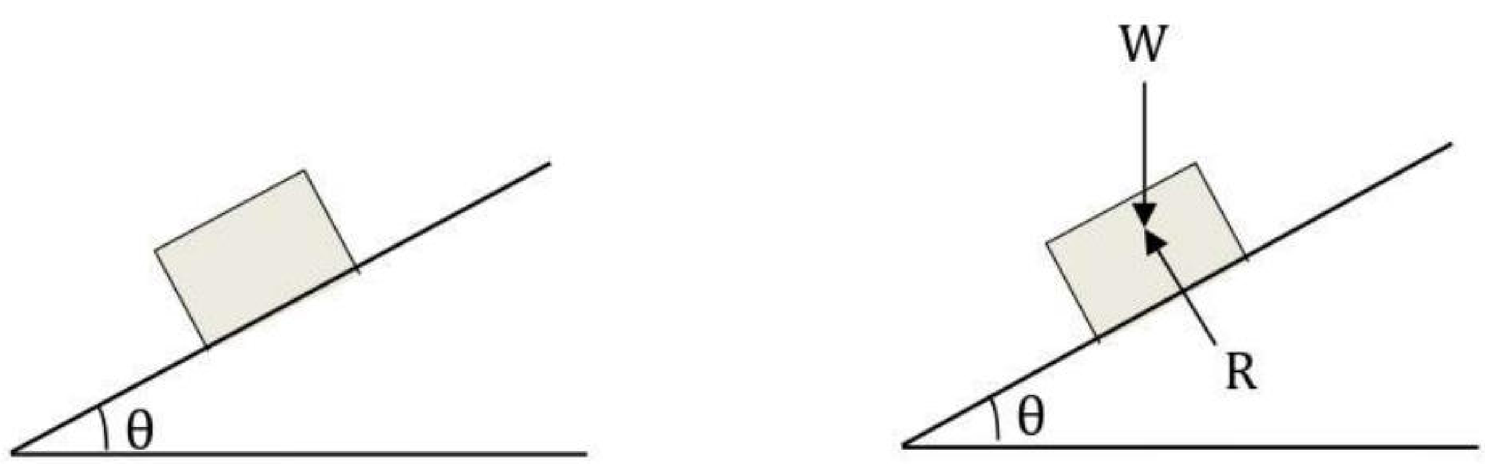

Figure :- Block resting on a smooth inclined plane and its free body diagram.

**Download from www.arjun00.com.np

c) Laws of dry friction

➢ **The Laws of dry friction :-**

- Direction of friction force is always opposite to the direction in which body tends to move.
- Friction force is equal to the applied force (which tends to move the body) till its maximum value not reached.
- The limiting friction is proportional to the normal reaction between the two contacting surfaces.

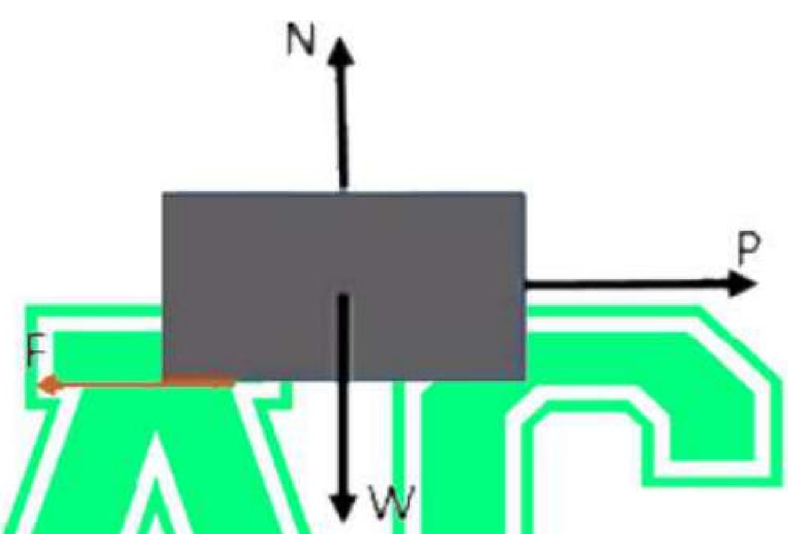

$$F_{max} \; \alpha \; N$$

$$F = \mu N$$

- The force of friction is independent of the area of contact.
- Once the body starts moving, friction force get reduced and can be obtained by the relation.

  $\boldsymbol{F = \mu_k N}$, Where μ_k is the coefficient of kinetic friction and its value is always less than the coefficient of static friction.

d) Principles of transmissibly

➢ It states that the conditions of equilibrium or motion of a rigid body remains unchanged if a force acting at a given point of the rigid body is replaced by a force of the same magnitude and direction, but acting at a different point, provided that the two forces have the same line of action.

**Download from www.arjun00.com.np

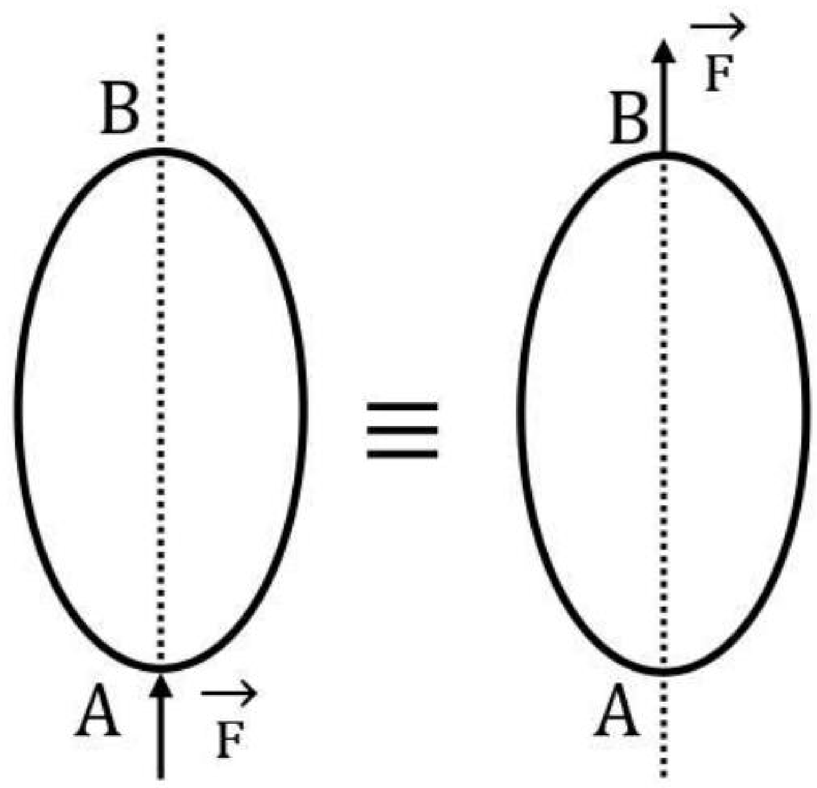

Figure: Principle of transmissibility

AC

e) Statically determinate and indeterminate structure

Statically determinate

- A statically determinate beam is one for which the reactions and internal stresses, shear force, bending moment developed in the plane member can be completely determined by using the equation of static equilibrium and conditional equations. Determinate structures are analyzed just by the use of basic equilibrium equations . $e.$, $\sum \mathrm{H} = 0$, $\sum \mathrm{V} = 0$, and $\sum \mathrm{M} = 0$, By this analysis, the unknown reactions are found for the further determination of stresses.

  $For\ example$; simply supported beams, cantilever beams, single and double overhanging beam, three hinged
  arches, etc.

**Download from www.arjun00.com.np

Indeterminate structure

- Statically indeterminate systems reaction components and internal stresses on the plane members cannot be completely determined by using the equation of static equilibrium and conditional equation. Statically indeterminate is an indeterminate structure, if it cannot be analyzed from principles of static alone . $e.$, $\sum \mathrm{H} = 0, \sum \mathrm{V} = 0$, and $\sum \mathrm{M} = 0$, By using this condition, statically indeterminate beam cannot be analyzed.
  $For\ example$; fixed beams, continuous beam, fixed arches, two hinged arches, multistoried frames, etc.

⇐ *The End* ⇒

** "If you find a mistake in Question/Answer, Kindly take a Screenshot and email to info@arjun00.com.np "

**This Solution is for Educational Purpose Only. If you misuse it, we are not Responsible.

Support us

A Small gift will help maintain this website. →

Feel Free to Read at no cost.
Support us on: fonepay
you can donate as you wish.

ARJUN CHAUDHARY
2222120014283943

**Download from www.arjun00.com.np

Applied Mechanics__(Engg. All) 2nd Sem

(2081 *Special Scholarship*)Only Numerical Solution.

Compile & Written by © Arjun Chy

Website :- www.arjun00.com.np

Facebook :-www.facebook.com/Arjun00.com.np

1. b) A 160 N force P is applied at point A of the structural member. Replace P with

a. Equivalent force couple at C.

b. Equivalent system consisting of a vertical force at B and second force at D.

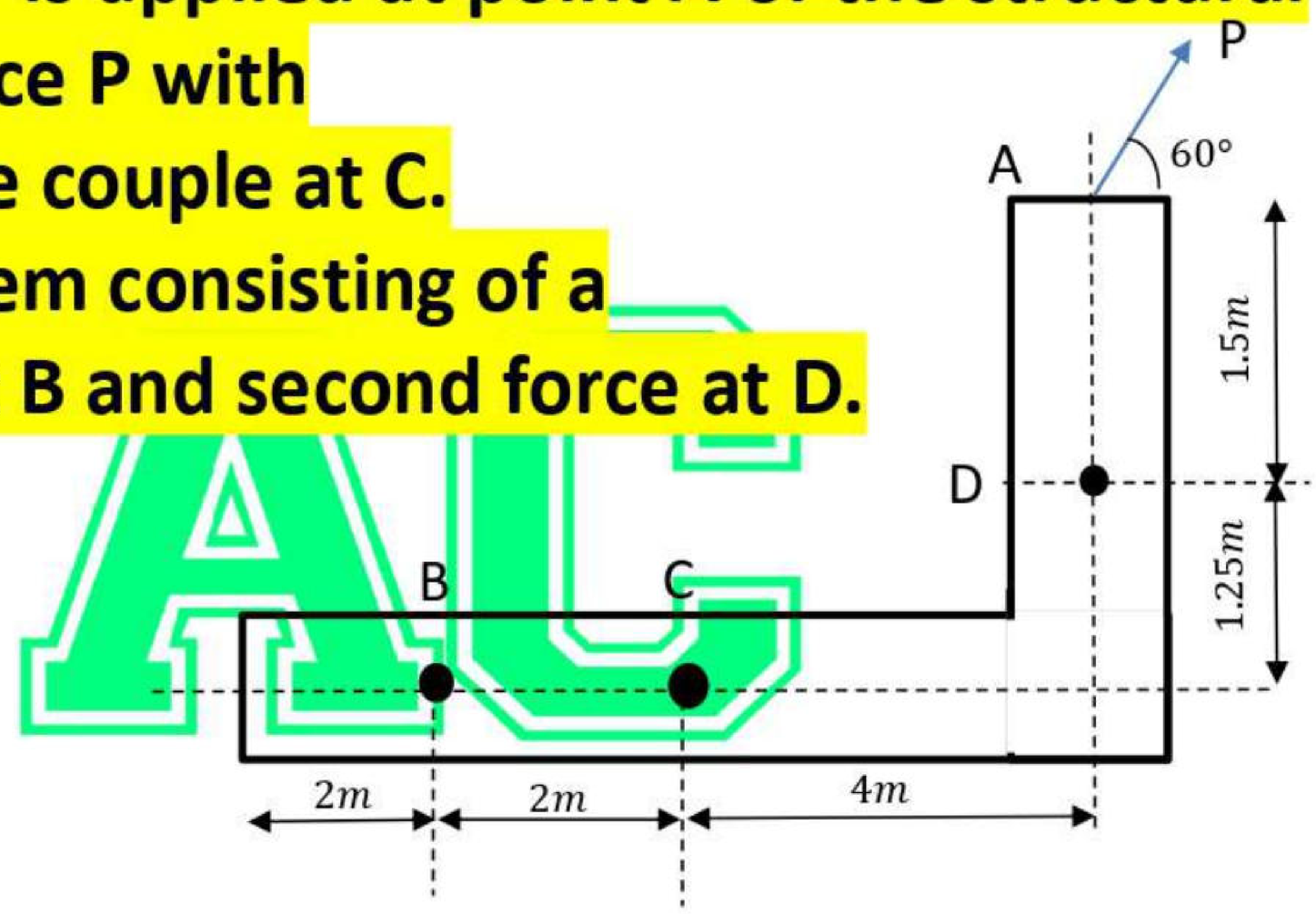

→Solution:

Case I)

Let $\mathbf{m_C}$ be Equivalent force Couple at C.

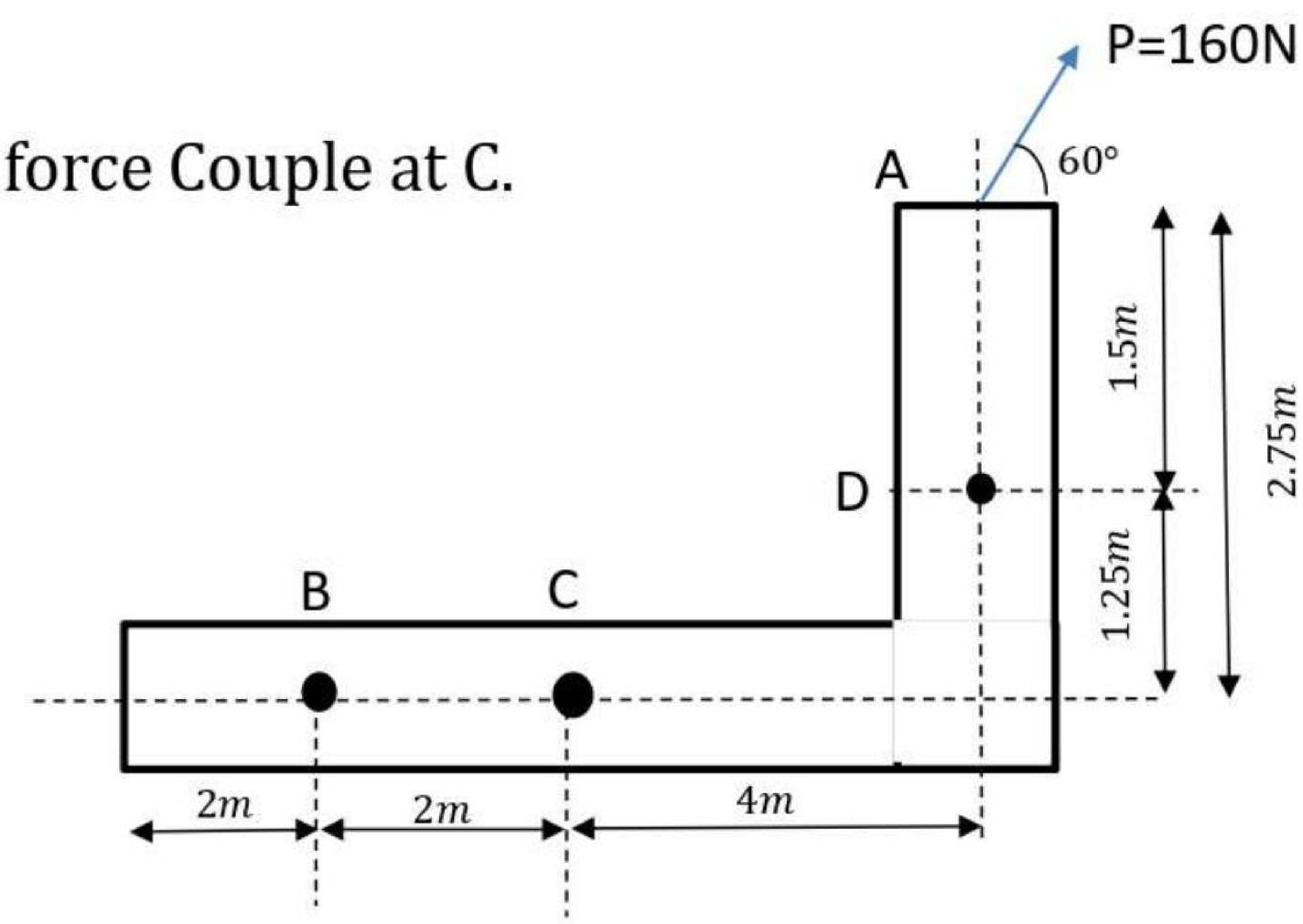

**Download from www.arjun00.com.np

Resolving force P into X and Y component,

$$P_x = P\cos 60 = 160\cos 60 = 80N$$

$$P_y = P\sin 60 = 160\sin 60 = 138.564\ N$$

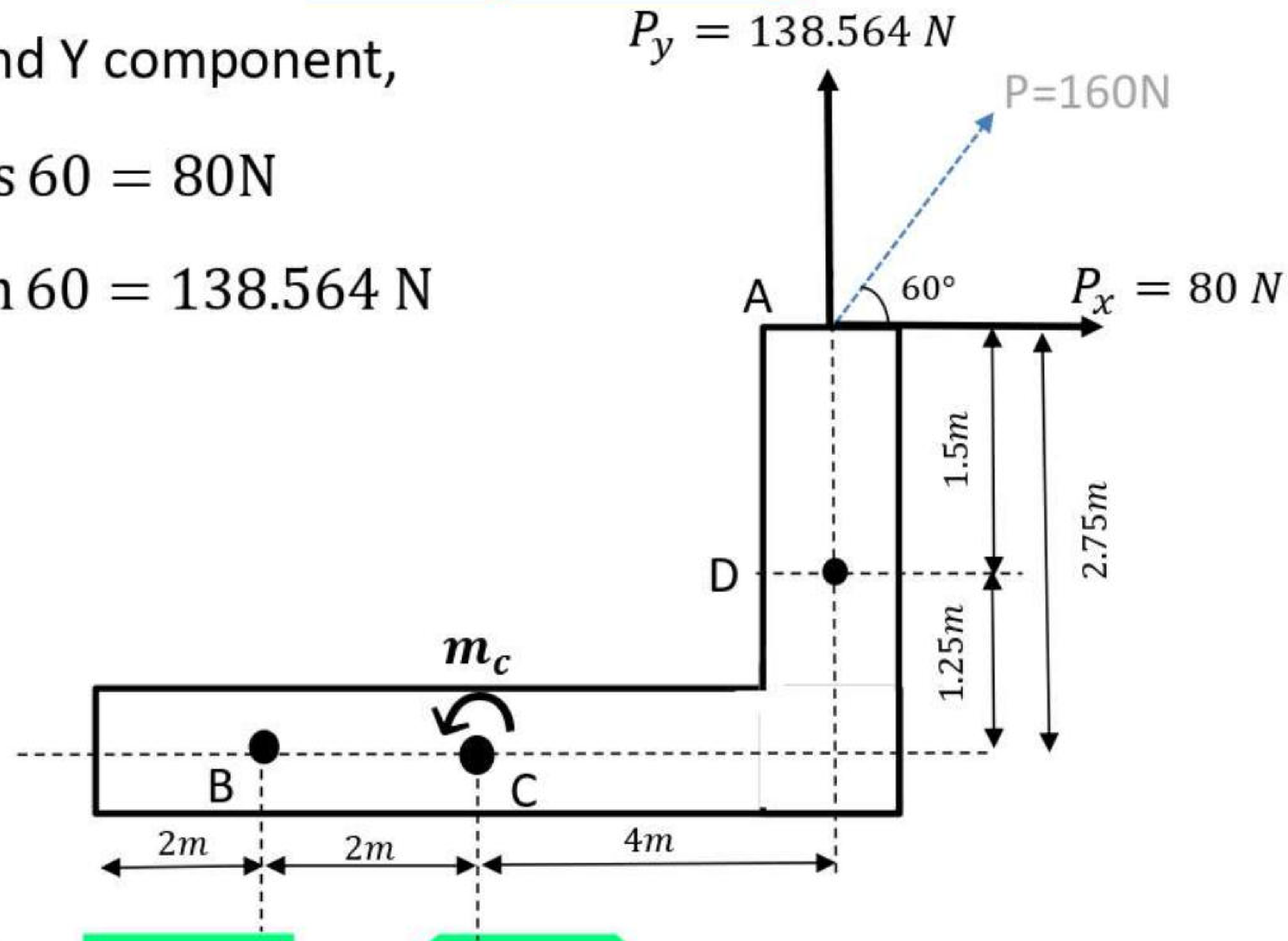

Taking moment at C

$$\sum M_C = 0 \quad (\curvearrowleft) + ve,$$

$$m_c - 80 \times 2.75 + 138.564 \times 4 = 0$$

$$m_c = -334.256\ Nm = \mathbf{334.256\ Nm}\ (\circlearrowright)$$

Case II)

Let $\mathbf{F_B}$ be Vertical force at B.

And $\mathbf{F_B}$ be Vertical force act at angle θ to X − axis

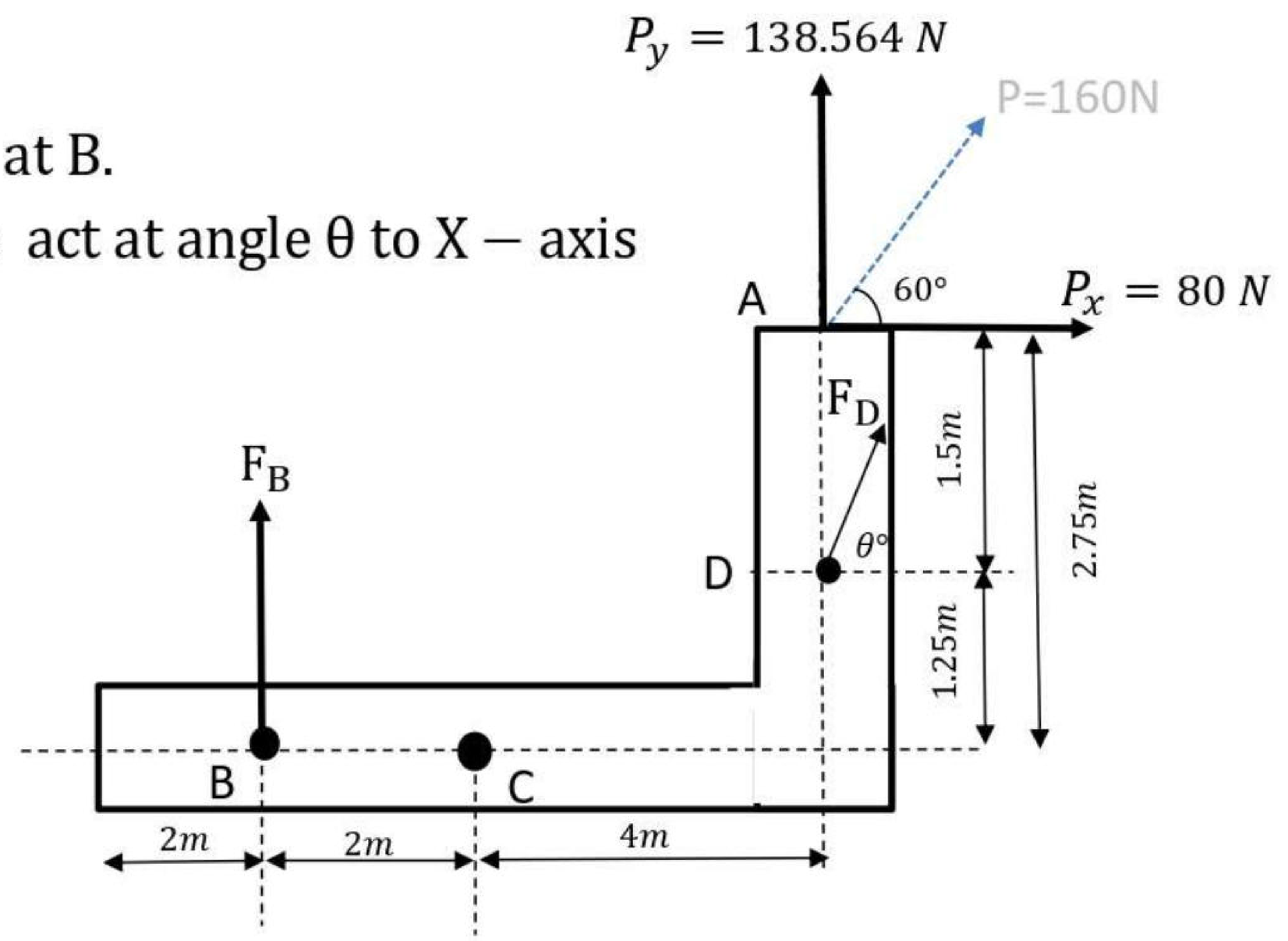

**Download from www.arjun00.com.np

Taking moment at D ,

$$\sum M_D = 0 \quad (\circlearrowleft) + ve,$$

$$F_B \times 6 + 80 \times 1.5 = 0$$

$$F_B \times 6 = -80 \times 1.5$$

$$\therefore \boldsymbol{F_B = -20\ N}$$

Now,

$$\sum F_x = 0 \ (\rightarrow +ve)$$

$$80 + \boldsymbol{F_D} \cos\theta = 0$$

$$\boldsymbol{F_D} \cos\theta = -80 \ \cdots\cdots\cdots\cdots (i)$$

Also,

$$\sum F_y = 0 \ (\uparrow +ve)$$

$$-20 + 138.564 + \boldsymbol{F_D} \sin\theta = 0$$

$$\boldsymbol{F_D} \sin\theta = -118.564 \ \cdots\cdots\cdots\cdots (ii)$$

Dividing (ii) by (i),

$$\frac{F_D \sin\theta}{F_D \cos\theta} = \frac{-118.564}{-80}$$

$$tan\theta = \frac{-118.564}{-80}$$

$$\theta = \tan^{-1}(1.482) = 55.99°$$

from (i),

$$\boldsymbol{F_D} \cos(55.99°) = -80$$

$$\therefore \boldsymbol{F_D = -143.026\ N}$$

**Download from www.arjun00.com.np

2. b) A wooden block of weight 100 N rests on a horizontal plane. Determine the force required to just (a) pull it (b) push it. Take coefficient of friction p=0.3 for all surface.

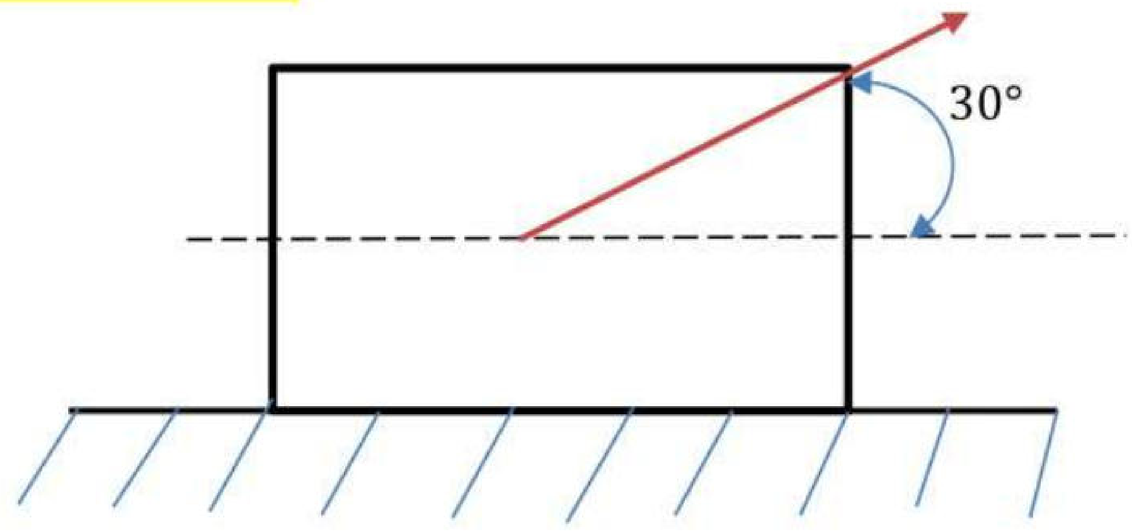

➔ Solution:

R be the Vertical reaction

$\mu = 0.3$ and $\theta = 30°$

Case (a) Force Required To Just Pull it

So, Friction force(F_r) act opposite to motion.

$(\rightarrow) + ve \sum \mathbf{F_x} = \mathbf{0}$

$$P\cos\theta - F_r = 0$$

$$P\cos\theta = F_r$$

Since, $F_r = \mu . R$

So, $P\cos\theta = \mu . R \quad \cdots\cdots (i)$

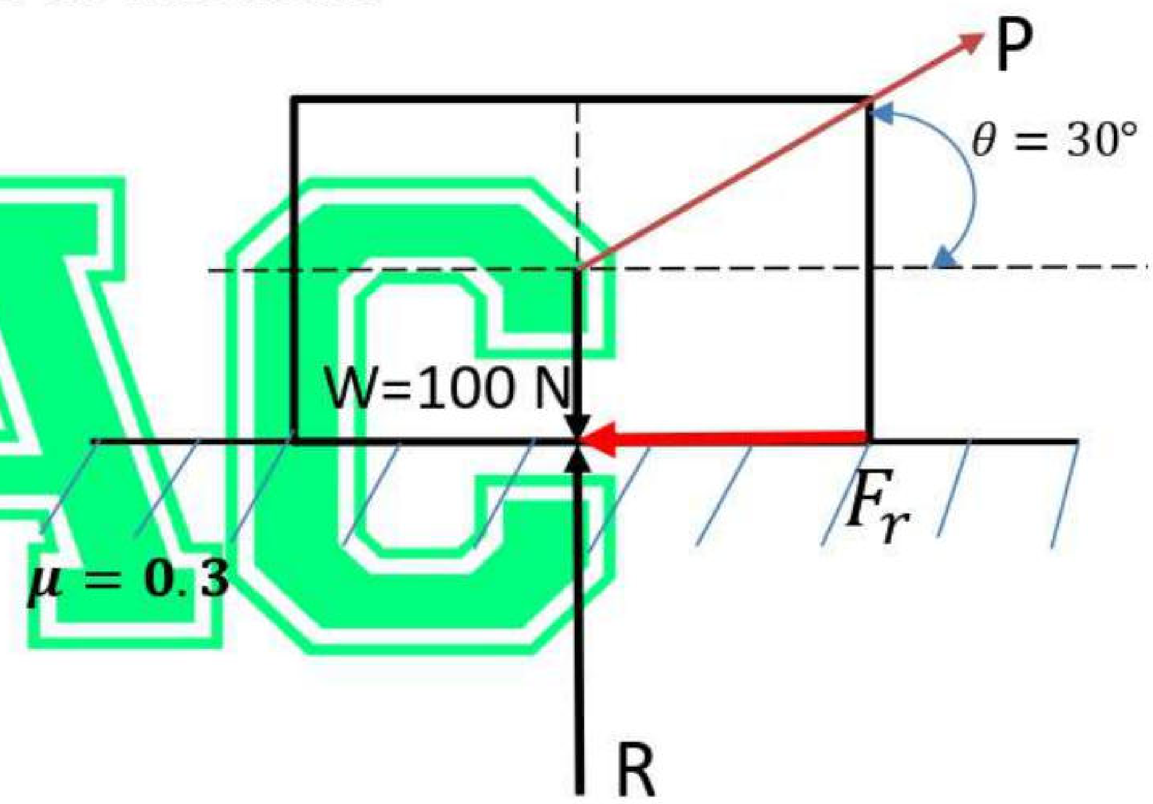

Fig: Free body diagram

$(\uparrow) + ve \sum F_y = 0;$

$$R - 100 + P\sin\theta = 0$$

$$R = 100 - P\sin\theta \cdots\cdots (ii)$$

From (i) and (ii) weget,

$$P\cos\theta = \mu . (100 - P\sin\theta)$$

$$\text{or,} \quad P\cos\theta + \mu . P\sin\theta = \mu . 100$$

$$\text{or,} P(\cos\theta + \mu . \sin\theta) = \mu . 100$$

$$\text{or,} P = \frac{\mu . 100}{(\cos\theta + \mu . \sin\theta)}$$

$$\therefore P = \frac{\mu . 100}{(\cos\theta + \mu . \sin\theta)} = \frac{0.3 \times 100}{(\cos 30 + 0.3 . \sin 30)} = \mathbf{29.526N}$$

**Download from www.arjun00.com.np

$\therefore$ **Force Required To Just Pull it = 29.526N**

R be the Vertical reaction

$\mu = 0.3$ and $\theta = 30°$

Case (b) Force Required To Just Push it

So, Friction force (F_r) act opposite to motion.

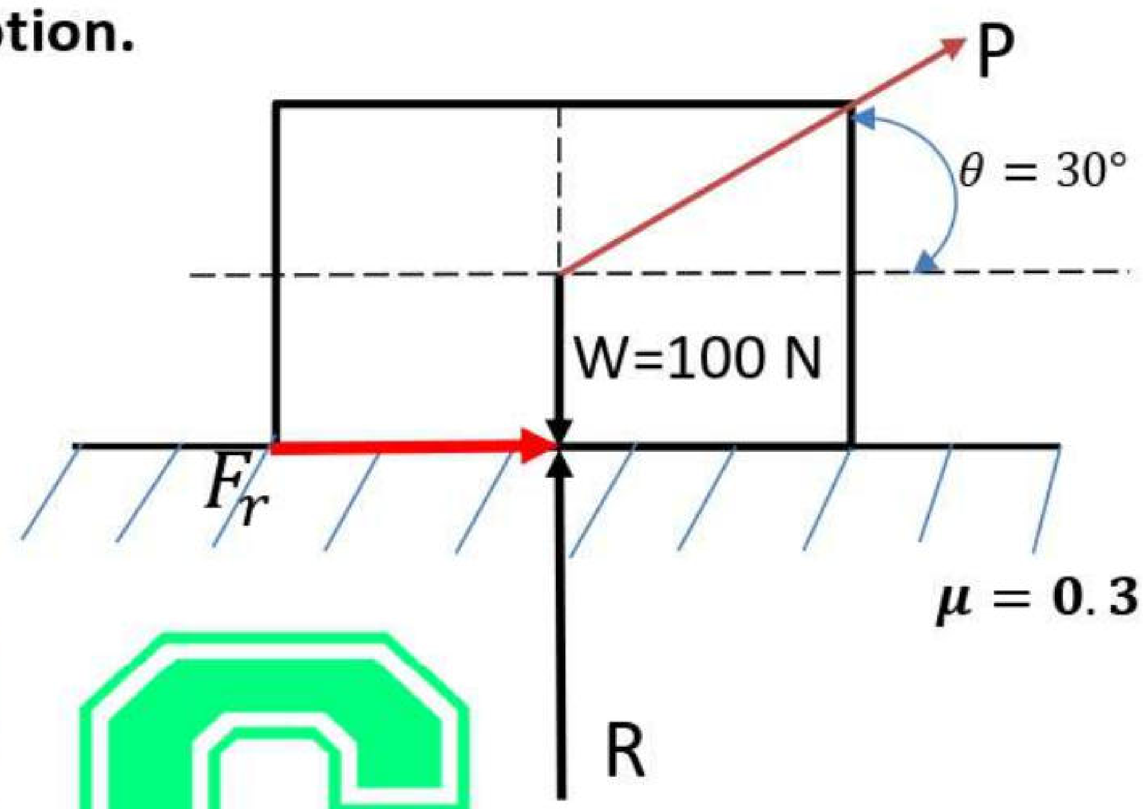

Fig: Free body diagram

$$(\rightarrow) + ve \sum F_x = 0$$

$$-P\cos\theta + F_r = 0$$

$$P\cos\theta = F_r$$

Since, $F_r = \mu . R$

So, $P\cos\theta = \mu . R \quad \cdots\cdots\cdots (i)$

$$(\uparrow) + ve \sum F_y = 0;$$

$$R - 100 - P\sin\theta = 0$$

$$R = 100 + P\sin\theta \cdots\cdots (ii)$$

From (i) and (ii) we get,

$$P\cos\theta = \mu . (100 + P\sin\theta)$$

$$\text{or, } P\cos\theta - \mu . P\sin\theta = \mu . 100$$

$$\text{or, } P(\cos\theta - \mu . \sin\theta) = \mu . 100$$

$$\text{or, } P = \frac{\mu . 100}{(\cos\theta - \mu . \sin\theta)}$$

$$\therefore P = \frac{\mu . 100}{(\cos\theta - \mu . \sin\theta)} = \frac{0.3 \times 100}{(\cos 30 - 0.3 . \sin 30)} = 41.897N$$

$\therefore$ **Force Required To Just Push it = 41.897N**

Hence, Force Required To Pull is lesser than Force Required To Just Push It.

**Download from www.arjun00.com.np

3. b) Calculate moment of inertia about centroidal axis.

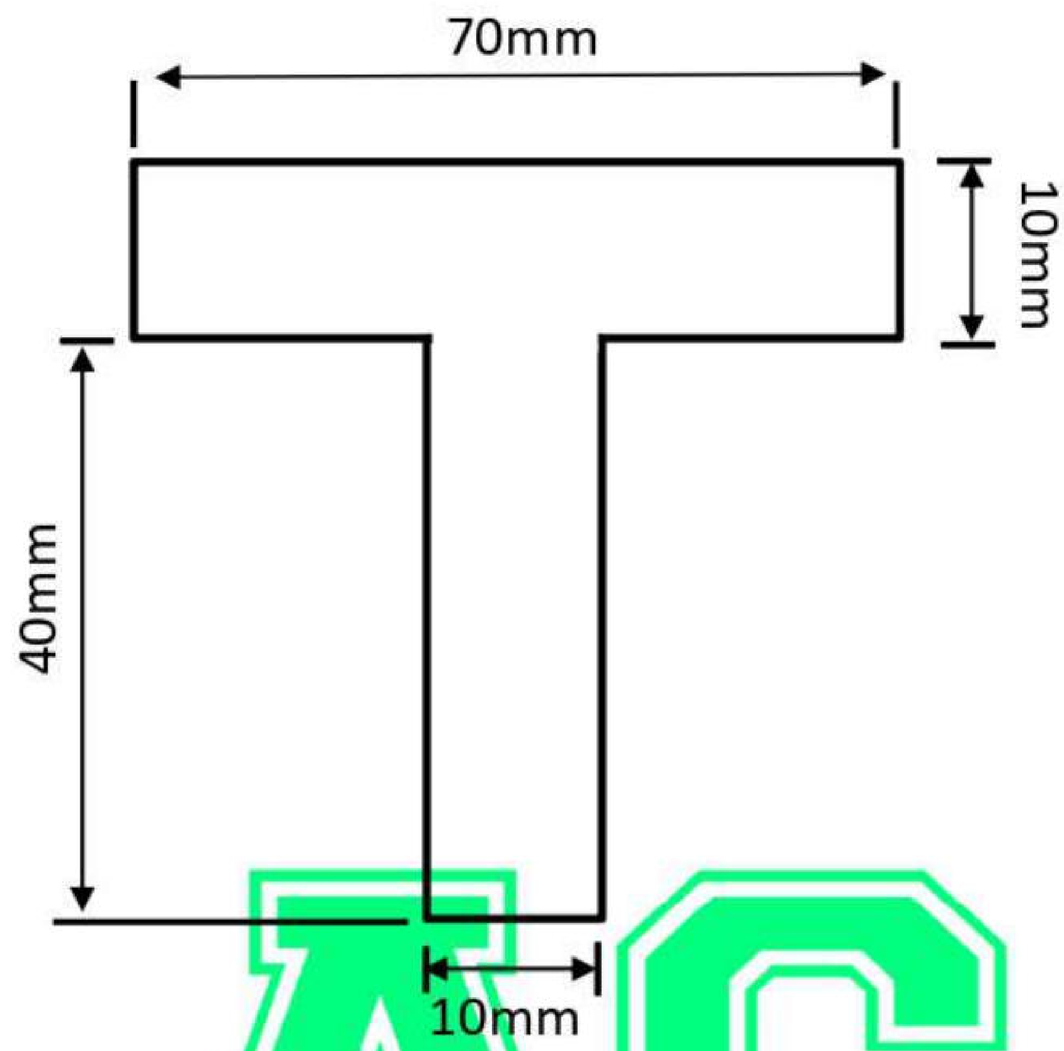

➔ Solution:

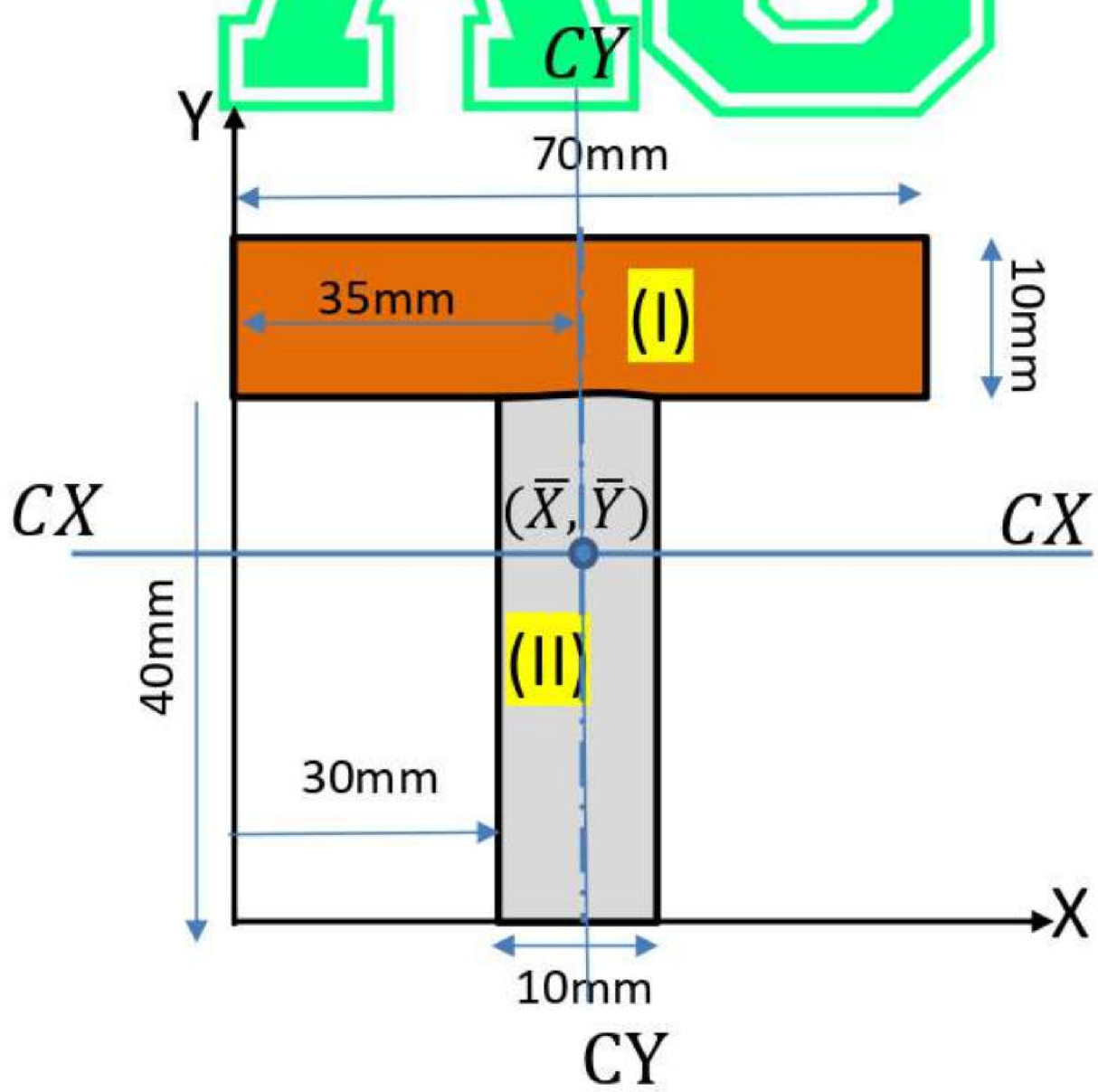

**Download from www.arjun00.com.np

Fig	$\overline{X}$,mm	$\overline{Y}$,mm	Area, mm^2
I(+ve)	$\frac{70}{2} = 35$	$40 + \frac{10}{2} = 45$	$70 \times 10 = 700$
II(+ve)	$30 + \frac{10}{2} = 35$	$\frac{40}{2} = 20$	$10 \times 40 = 400$

$$\overline{X} = \frac{\sum AX}{\sum A} = \frac{A_1X_1 + A_2X_2}{A_1 + A_2} = \frac{700 \times 35 + 400 \times 35}{700 + 400} = \mathbf{35\ mm}$$

$$\overline{Y} = \frac{\sum AY}{\sum A} = \frac{A_1Y_1 + A_2Y_2}{A_1 + A_2} = \frac{700 \times 45 + 400 \times 20}{700 + 400} = \mathbf{35.909mm}$$

MOI about Centroidal X-axis,

$$I_{CX-CX} = \left[\frac{bh^3}{12} + A_1\left(\overline{Y} - Y_1\right)^2\right] + \left[\frac{bh^3}{12} + A_2\left(\overline{Y} - Y_2\right)^2\right]$$

$$= \left[\frac{70 \times 10^3}{12} + 700 \times (35.909 - 45)^2\right] + \left[\frac{10 \times 40^3}{12} + 400 \times (35.909 - 20)^2\right]$$

$$= 63685.730 + 154571.845$$

$$\therefore \mathbf{I_{CX-CX} = 218257.575\ mm^4}$$

MOI about Centroidal Y-axis,

$$I_{CY-CY} = \left[\frac{h\,b^3}{12} + A_1\left(\overline{X} - X_1\right)^2\right] + \left[\frac{h\,b^3}{12} + A_2\left(\overline{X} - X_2\right)^2\right]$$

$$= \left[\frac{10 \times 70^3}{12} + 700 \times (35 - 35)^2\right] + \left[\frac{40 \times 10^3}{12} + 400 \times (35 - 35)^2\right]$$

$$= 285833.333 + 3333.333$$

$$\therefore \mathbf{I_{CY-CY} = 289166.666\ mm^4}$$

**Download from www.arjun00.com.np

4. b) Calculate the support reaction and draw the SFD and BMD for the given beam.

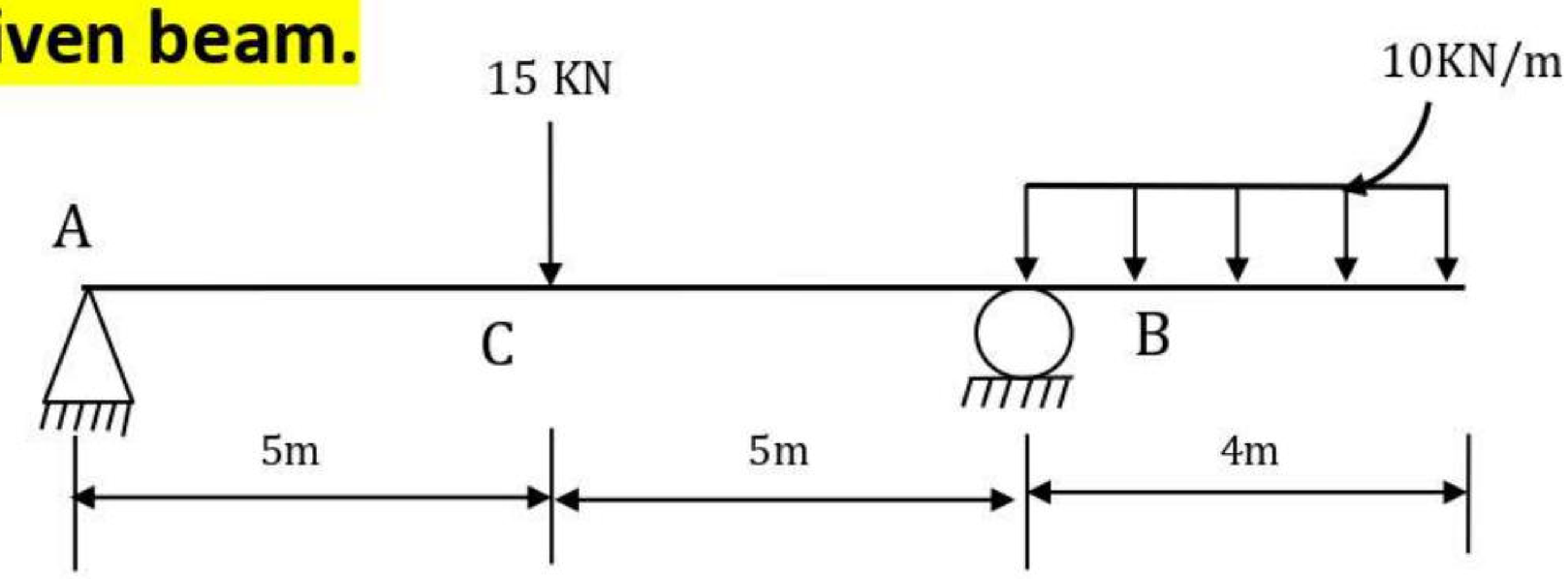

➔Solution:

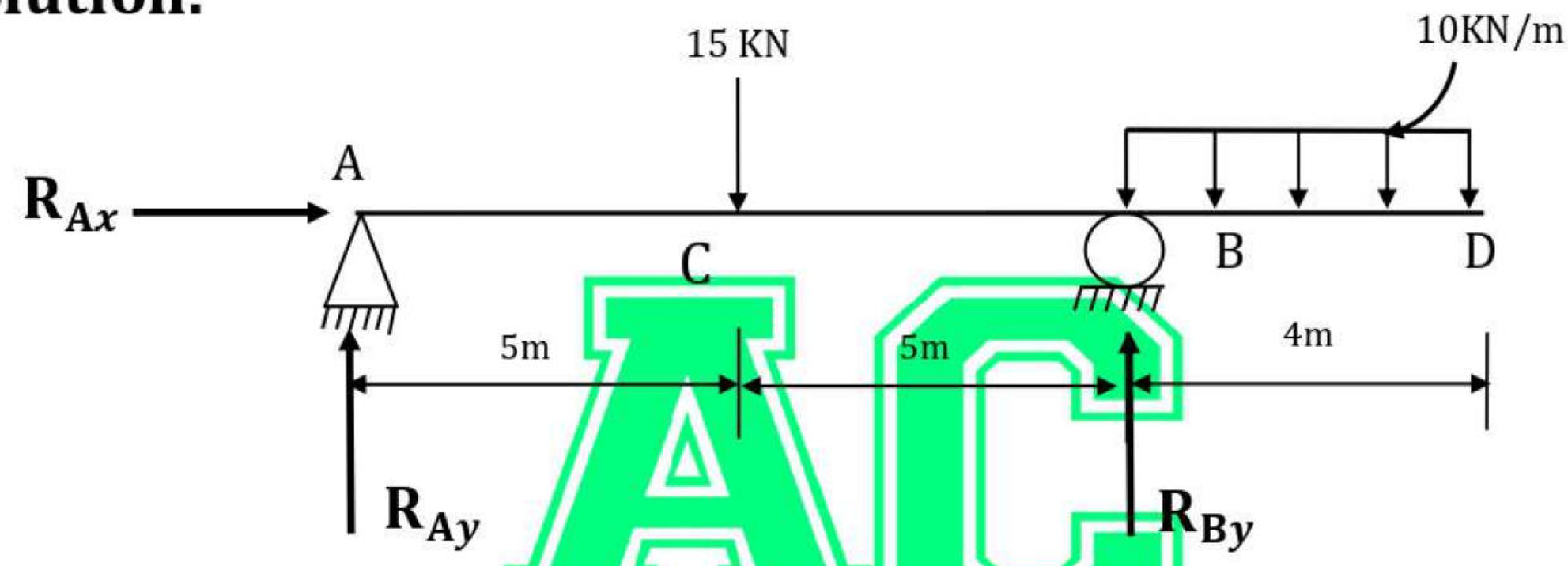

1) Calculation of Reaction:

Let

R_{Ax} and

R_{Ay} be the horizontal and Vertical reaction at A (Pin support)

R_{By} be the Vertical reaction at B (Roller support).

$$(+\circlearrowright)\sum M_A = 0$$

$$15 \times 5 + (10 \times 4)\left(\frac{4}{2} + 10\right) - R_{By} \times 10 = 0$$

$$75 + 480 - R_{By} \times 10 = 0$$

$$\Rightarrow \mathbf{R_{By} = 55.5\ KN}(\uparrow)$$

$$\sum F_x\ (\rightarrow) + Ve = 0\ \ so,$$

$$\mathbf{R_{Ax} = 0}$$

**Download from www.arjun00.com.np

$$\sum F_y\ (\uparrow) + Ve = 0$$

$$R_{Ay} + R_{By} - 15 - 10 \times 4 = 0$$

$$R_{Ay} + 55.5 - 15 - 10 \times 4 = 0$$

$$R_{Ay} + 0.5 = 0$$

$$R_{Ay} = -0.5\ KN$$

$$\therefore \mathbf{R_{Ay} = 0.5\ KN}\ (\downarrow)$$

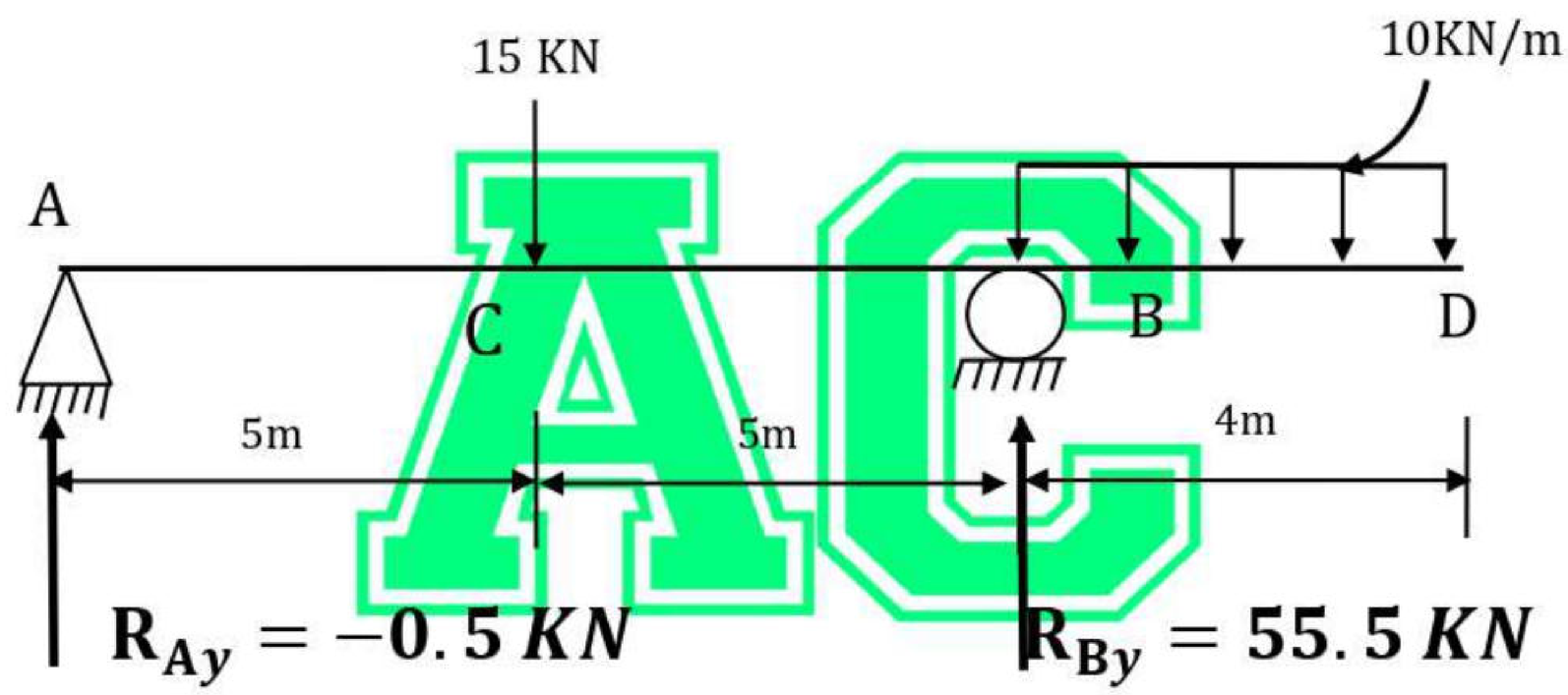

2).Calculation Of SF : **(moving from left to right) ($+ve\ \uparrow, \downarrow -ve$)**

$$A_L = 0 = 0KN$$
$$A_R = 0 - 0.5 = -0.5KN$$
$$C_L = -0.5KN$$
$$C_R = -0.5 - 15 = -15.5KN$$
$$B_L = -15.5 = -15.5KN$$
$$B_R = -15.5 + 55.5 = -15.5 + 55.5 = 40KN$$
$$D_L = 40 - 10 \times 4 = 0KN$$
$$D_R = 0 = 0KN$$

**Download from www.arjun00.com.np

3).Calculation Of BMD : **(moving from left to right)**

$$\mathbf{M_A} = 0$$

$$\mathrm{M_C} = -0.5 \times 5 = -2.5 \text{ KNm}$$

$$\mathbf{M_B} = -0.5 \times 10 - 15 \times 5 = -80 \text{ KNm}$$

For UDL part,

Cutting section at $(1-1)$ and analysis right part of section$(1-1)$

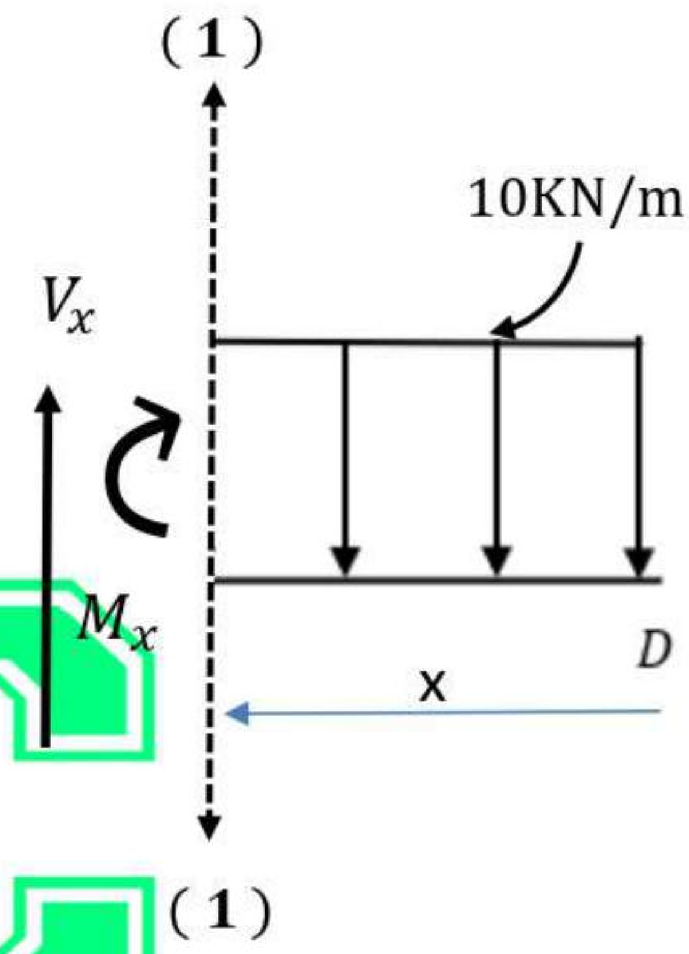

$$(\uparrow +\text{ve}) \sum \mathrm{F_y} = 0,$$

$$V_x - 10x = 0$$

$$\text{Or}, V_x = 10x \qquad [\, x \in (0,4) \,]$$

(Right to left)

$$\text{At x} = 0, \mathrm{V_D} = 0 \text{ KN}$$

$$\text{At x} = 4, \mathrm{V_D} = 40 \text{ KN}$$

$$(+\circlearrowleft) \sum \mathrm{M_x} = 0$$

$$-\mathrm{M_x} - 10x \times \frac{x}{2} = 0$$

$$\mathrm{M_x} = -5x^2 \quad [\, x \in (0,4) \,]$$

$$\text{At x} = 0, \mathrm{M_x} = \mathbf{M_D} = 0$$

$$\text{At x} = 4, \mathrm{M_B} = -5 \times 4^2 = -80 \text{ KNm}$$

$$\text{At x} = 2, \mathrm{M_{BD}} \text{ mid} = -5 \times 2^2 = -20 \text{ KNm}$$

**Download from www.arjun00.com.np

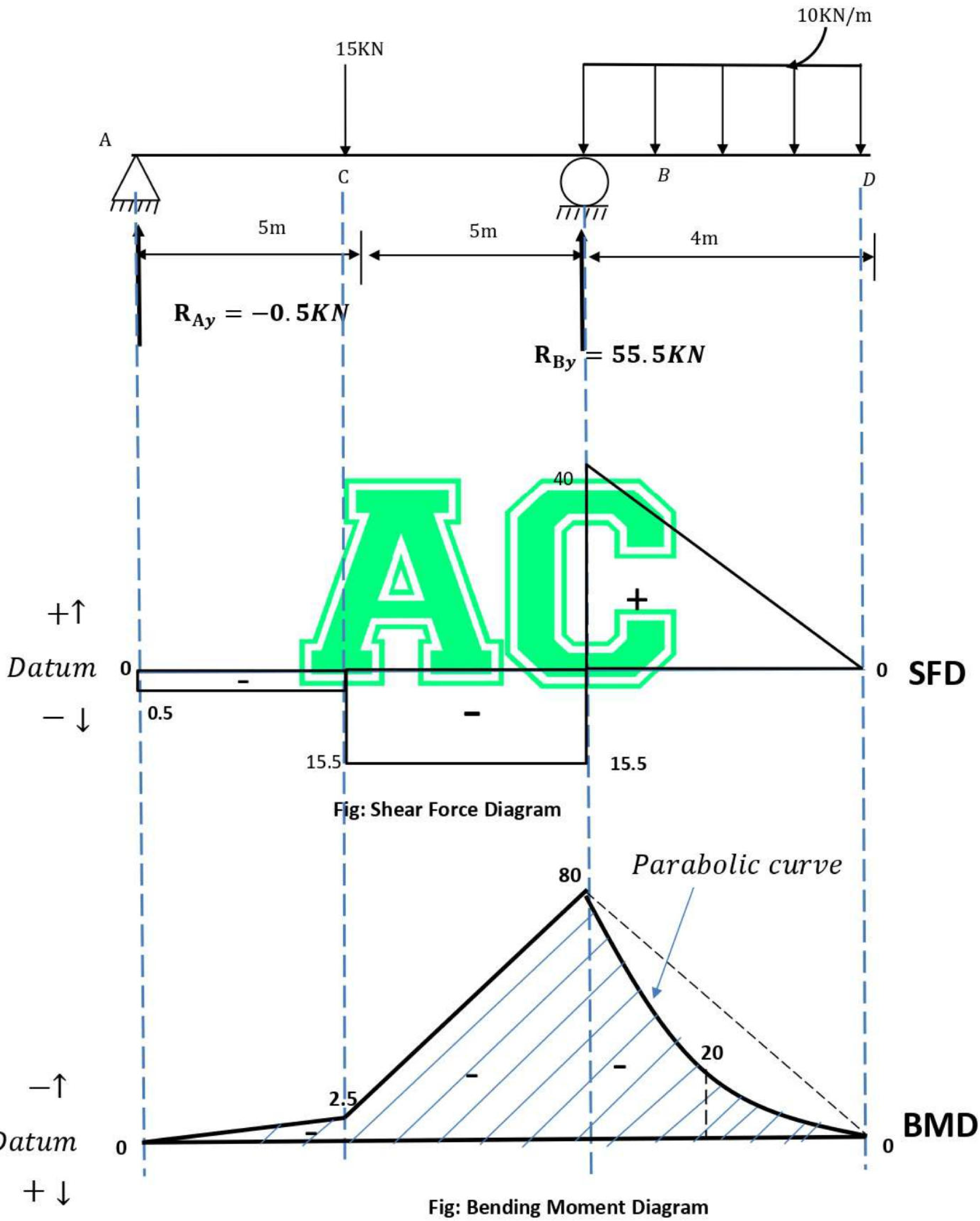

**Download from www.arjun00.com.np

5. b) Find the member forces in CF and BF.

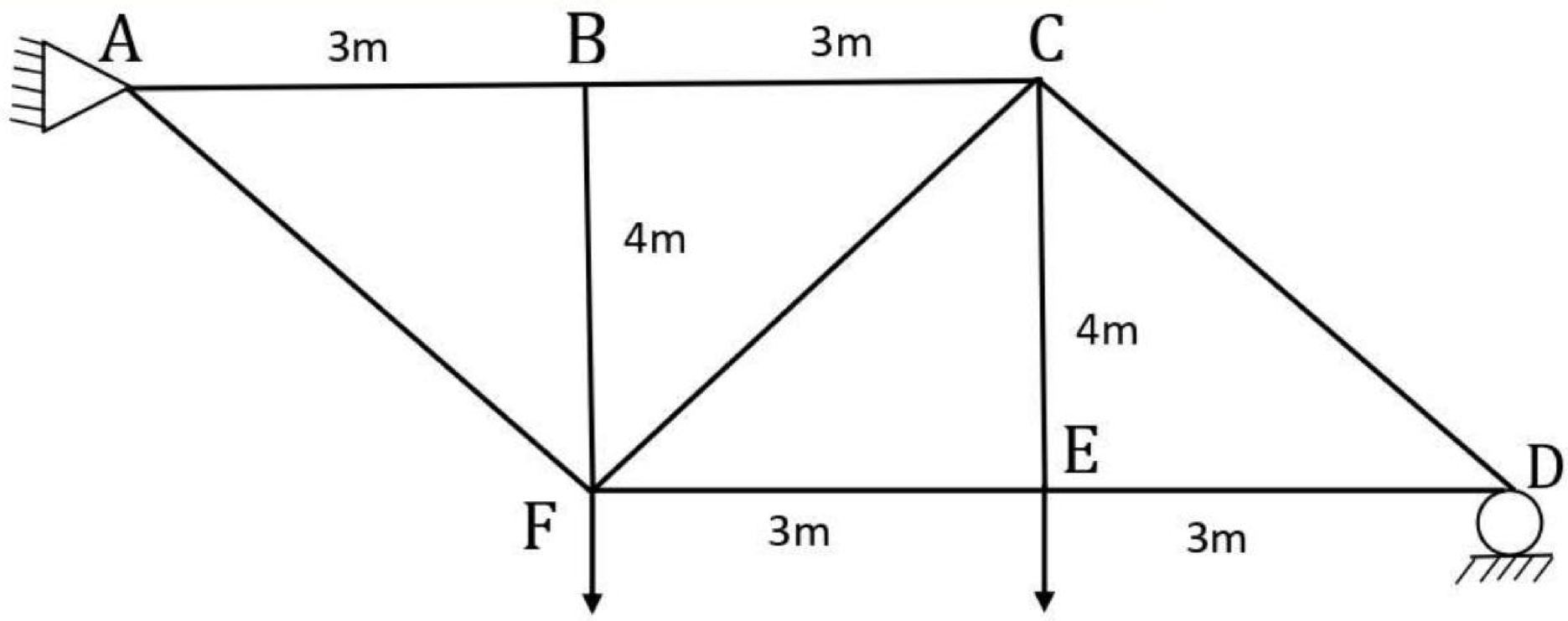

→Solution:

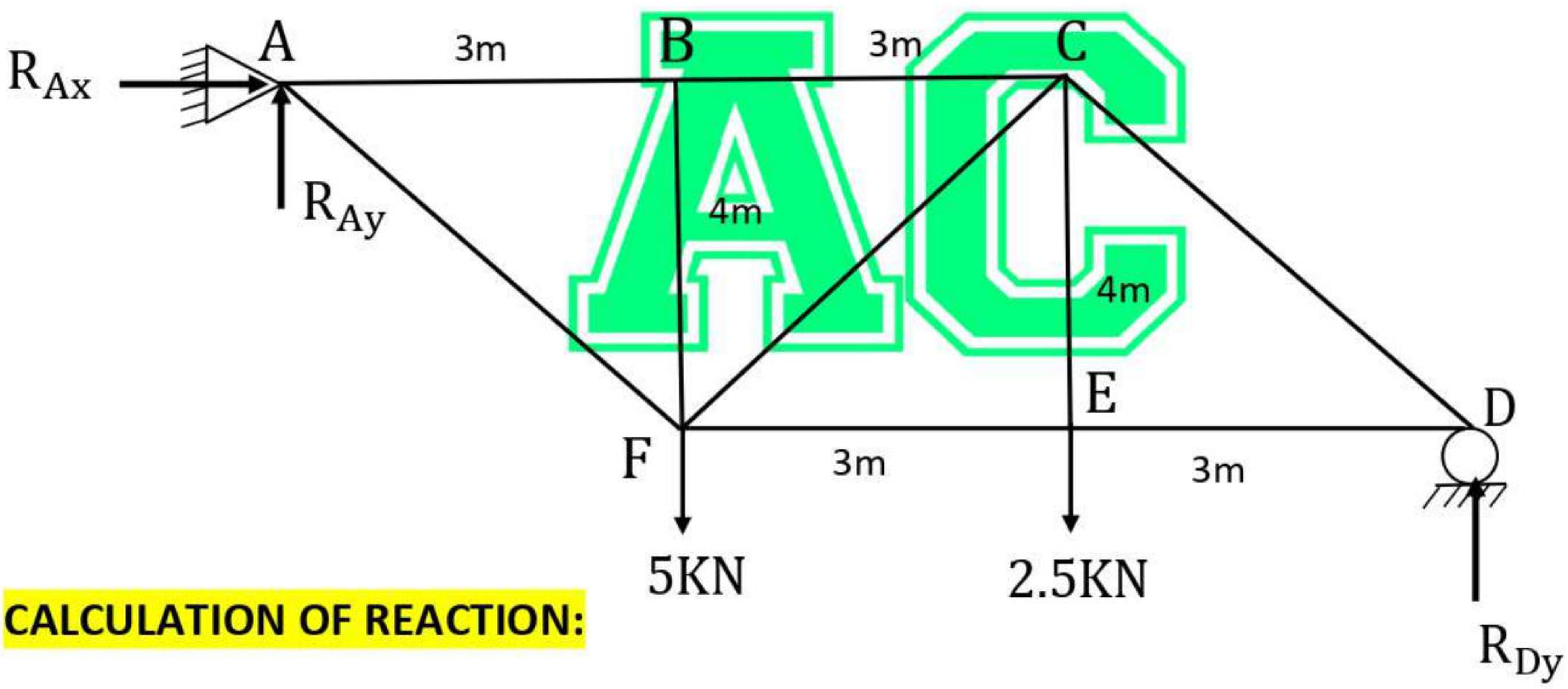

CALCULATION OF REACTION:

$$\sum M_A\ (\circlearrowright + ve) = 0$$

$$5 \times 3 + 2.5 \times 6 - R_{Dy} \times 9 = 0$$

$$30 - R_{Dy} \times 9 = 0$$

$$\mathbf{R_{Dy} = 3.33\ KN.}\ (\uparrow)$$

$$\sum F_x\ (\rightarrow + ve) = 0$$

$$R_{Ax} = 0$$

**Download from www.arjun00.com.np

$$\sum F_y\ (\uparrow + ve) = 0$$

$$R_{Ay} + R_{Dy} - 5 - 2.5 = 0$$

$$R_{Ay} + 3.33 - 7.5 = 0$$

$$\mathbf{R_{cy} = 4.17\ KN.}\ (\uparrow)$$

Solving using Method of Section To find Member force BF and CF

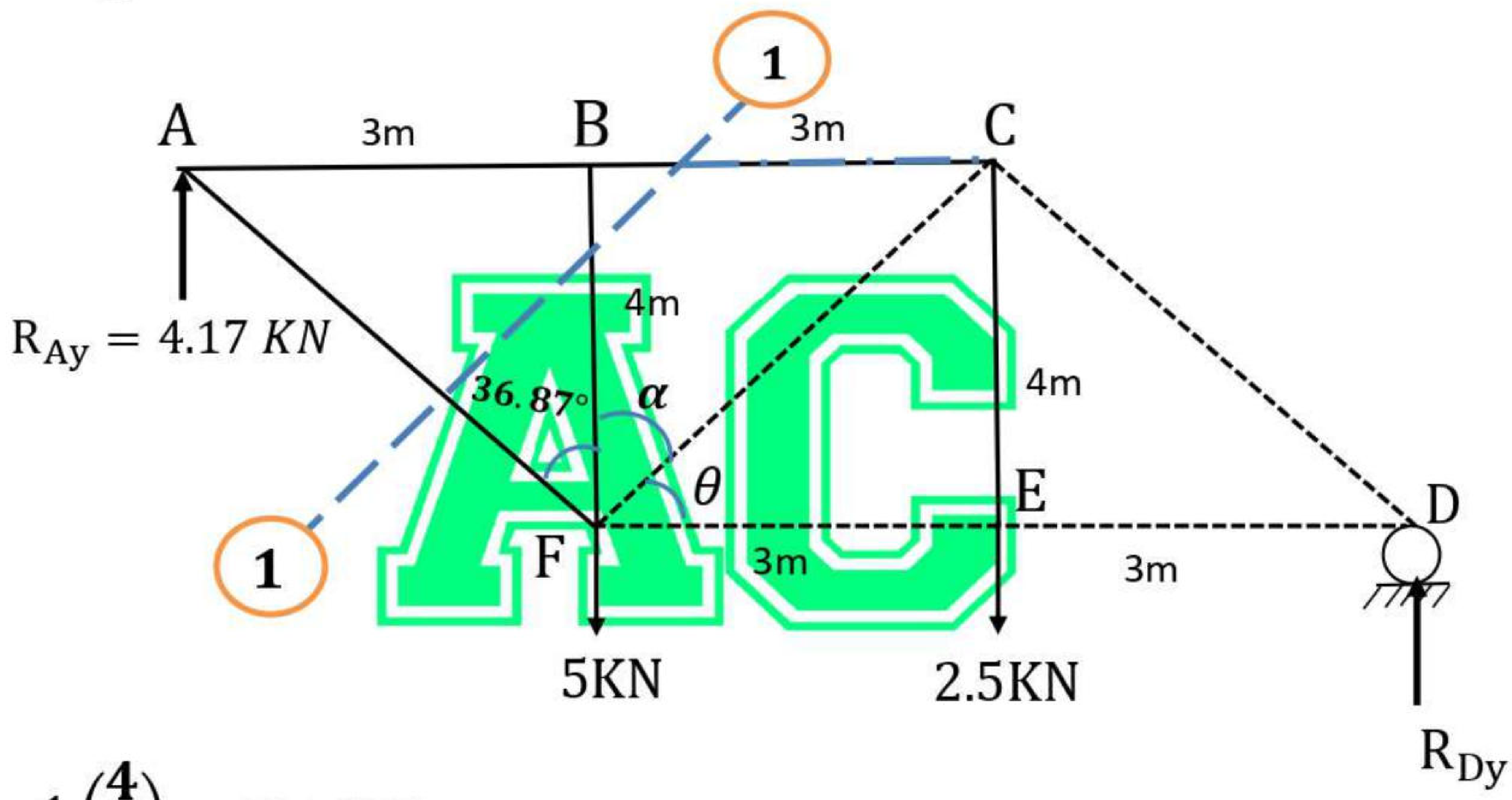

$$\boldsymbol{\theta = \tan^{-1}\left(\frac{4}{3}\right) = 53.13°}$$

$$\boldsymbol{\alpha = \tan^{-1}\left(\frac{3}{4}\right) = 36.87°}$$

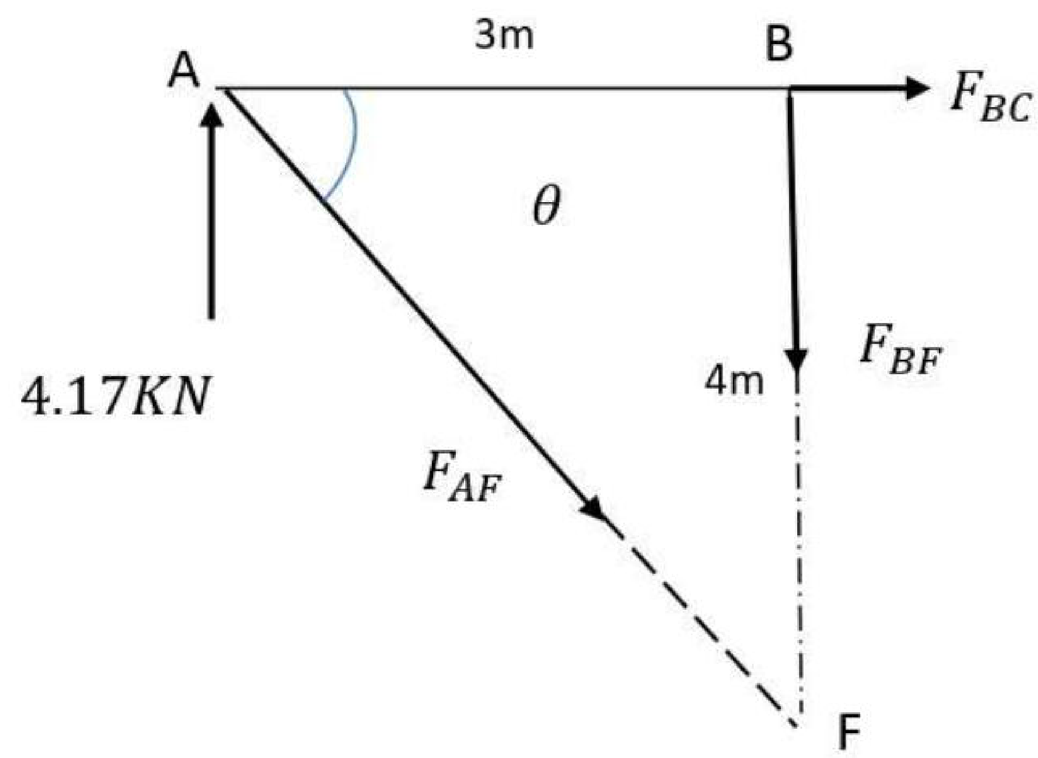

For Member force BF:

Consider left part of section 1-1

$$\sum M_A\ (\circlearrowright + ve) = 0$$

$$F_{BF} \times 3 = 0$$

$$\therefore \mathbf{F_{BF} = 0}$$

**Download from www.arjun00.com.np

$$\sum M_B\ (\circlearrowright + ve) = 0$$

$$4.17 \times 3 - F_{AF} \sin(53.13) \times 3 = 0$$

$$\therefore F_{AF} = \frac{4.17 \times 3}{\sin(53.13) \times 3} = 5.21\ KN$$

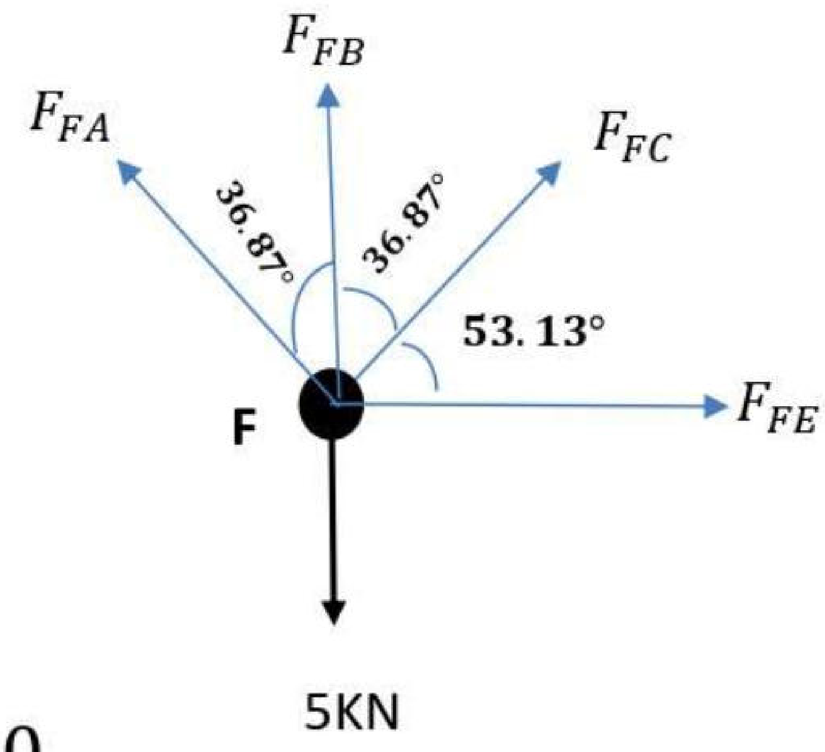

Now, At joint F

$$\sum F_y\ (\uparrow + ve) = 0$$

$$F_{FA} \cos 36.87 + F_{BF} + F_{FC} \cos 36.87 - 5 = 0$$

$$5.21 \cos 36.87 + 0 + F_{FC} \cos 36.87 - 5 = 0$$

$$F_{FC} = \frac{5 - 5.21 \cos 36.87}{\cos 36.87} = 1.04\ KN$$

Hence, $\therefore$ **$F_{FC} = 1.04\ KN$ (T)**

Member	Forces
BF	0
CF	1.04 KN (Tensile)

⇐ The End ⇒

****This Solution is for Educational Purpose Only. If you misuse it, we are not Responsible.**

Support us

A Small gift will help maintain this website. →

Feel Free to Read at no cost.

Support us on: fonepay

you can donate as you wish.

ARJUN CHAUDHARY

2222120014283943

**Download from www.arjun00.com.np

** "If you find a mistake in Question/Answer, Kindly take a Screenshot and email to info@arjun00.com.np "