CTEVT, DIPLOMA, QUESTION & SOLUTION

⇐ SECOND EDITION ⇒

Engineering Physics II

(for Diploma I Yrs. II Part)

Second Semester

(Engineering All)

By

Arjun Chaudhary

Published in : **www.arjun00.com.np**
www.facebook.com/arjun00.com.np

Authors **© Arjun Chaudhary**

Email:- info@arjun00.com.np

Solution_Last_Updated:- **2024/08/17 Time- 7:07 pm**

****Dont Remove these page, Otherwise You Got Copyright**

****All rights reserved. It is requested that no part of our PDF be uploaded to any group & app Without my permission.**

**Download from www.arjun00.com.np

S.No	Exam Year,	Month
1)	2077	Chaitra Regular/Back
2)	2078	Magh Regular/Back
3)	2079	Falgun Regular/Back
4)	2079	Falgun R/B__(Old + Very Old)
5)	2080	Mangsir R/B__(Old + Very Old)
6)	2080	Mangsir Regular (New)
7)	2081	Jestha__(Special Scholarship)

** "If you find a mistake in Question/Answer, Kindly take a Screenshot and email to info@arjun00.com.np "

** "I have created this content for students' benefit, so please don't copy it or remove my logos without permission. "

**This Solution is for Educational Purpose Only. If you misuse it, we are not Responsible.

Support us

A Small gift will help maintain this website. →

Feel Free to Read at no cost.

Support us on: fonepay

you can donate as you wish.

ARJUN CHAUDHARY

2222120014283943

**Download from www.arjun00.com.np

Engg. Physics –II__(Engg. All) 2nd Sem

(2077) Question Paper Solution.

Compile & Written by © Arjun Chy

Website :- www.arjun00.com.np

Facebook :-www.facebook.com/Arjun00.com.np

Group "A"

1. Define electric potential at a point. Derived an expression for potential at a point due to a point charge.

- Electric Potential at a point is defined as "**The amount of work done to bring Moving Charge at infinity to at a point** "

Expression for potential at a point

- Consider a positive charge **+q** placed at a point 'O' in vacuum as shown in the figure and another point 'A' at a distance 'r' from 'O'. Then,

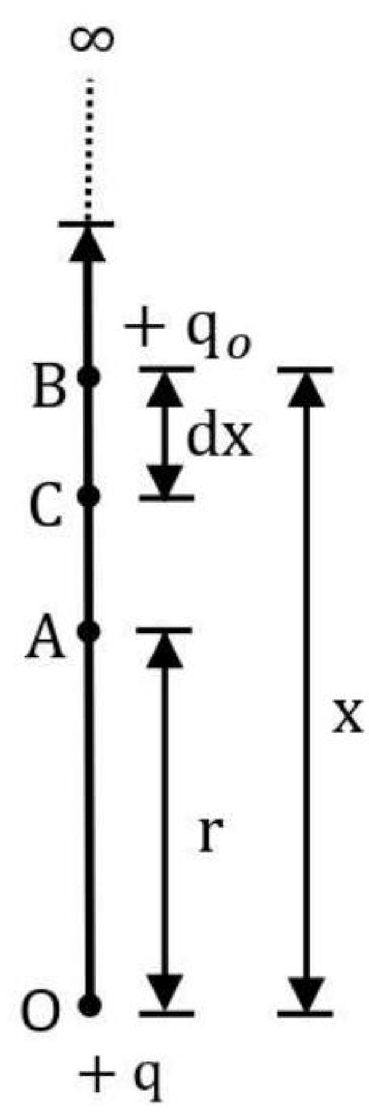

According to the definition,

potential V_a at a point 'A' is equal to the **amount of work done $W_{\infty a}$ in bringing a unit positive charge($+ q_o$) form infinity to point 'A'.**

$\therefore \quad \mathbf{V_a = W_{\infty a}}$

Electric field due Expereince by unit positive test charge $+q_o$ due to ***charge*** $+ \boldsymbol{q}$ *is given by*

www.arjun00.com.np

$$E = \frac{q.\, q_0}{4\pi\varepsilon_0 x^2}$$

**Download from www.arjun00.com.np

Unit Charge particle(q_0) in electric field experienced a force(F),

$$F = \frac{E}{q_0}$$

$$F = \frac{q}{4\pi\varepsilon_0 x^2}$$

Let, from point 'B', the unit positive charge is moved to point 'C' by an infinitesimal small distance dx. Then, amount of work done in moving the **unit positive charge by distance dx against the force 'F'** is given by;

$$dW = -F\,dx = -\frac{q}{4\pi\varepsilon_0 x^2}dx$$

Where, **-Ve sign** shows that, unit positive charge is displaced against the electrostatic force acting on it.

Now, the total work done in bringing the unit positive charge from infinity to point 'A' is obtained as;

$$W_{\infty a} = \int_{\infty}^{A} dW = \int_{\infty}^{r}\left(\frac{-q}{4\pi\varepsilon_0 x^2}\right)dx$$

$$= \frac{q}{4\pi\varepsilon_0}\int_{\infty}^{r} x^{-2}dx = \frac{-q}{4\pi\varepsilon_0}\left[\frac{x^{-1}}{-1}\right]_{\infty}^{r} = \frac{q}{4\pi\varepsilon_0}\left[\frac{1}{x}\right]_{\infty}^{r} = \frac{q}{4\pi\varepsilon_0}\left(\frac{1}{r} - \frac{1}{\infty}\right)$$

$$\therefore W_{\infty a} = \frac{q}{4\pi\varepsilon_0 r}$$

Hence, electric potential at point 'A' $(V_a) = \frac{q}{4\pi\varepsilon_0 r}$

**Download from www.arjun00.com.np

2. What is Wheatstone bridge? Describe its balanced condition using Kirchhoff's laws.

- **Wheatstone bridge** is invented by Professor Wheatstone. It consists of resistance, a galvanometer and a voltages source. This circuit is used to compare or measure the resistance of a conductor.

- **Balanced Condition using Kirchhoff's laws.**

Wheatstone bridge consists of four resistances 'P', 'Q', 'R' and 'X' connected to a battery as shown in the figure. The currents flowing through them are I_1, I_2, I_3 and I_4 respectively. The current through the galvanometer is I_G and its resistance is 'G'. Divide the bridge into closed circuits (i), (ii) and (iii).

Applying Kirchhoff's first law at different points,

At Point A,

$$I - (I_1 + I_2) = 0$$

$$or, \quad I = I_1 + I_2$$

$$\therefore \quad I_2 = I - I_1 \qquad \cdots\cdots\cdots (i)$$

At Point B,

$$I_1 = I_G + I_3$$

At balance condition; $I_G = 0$

$$\therefore \quad I_3 = I_1 \qquad \cdots\cdots\cdots (ii)$$

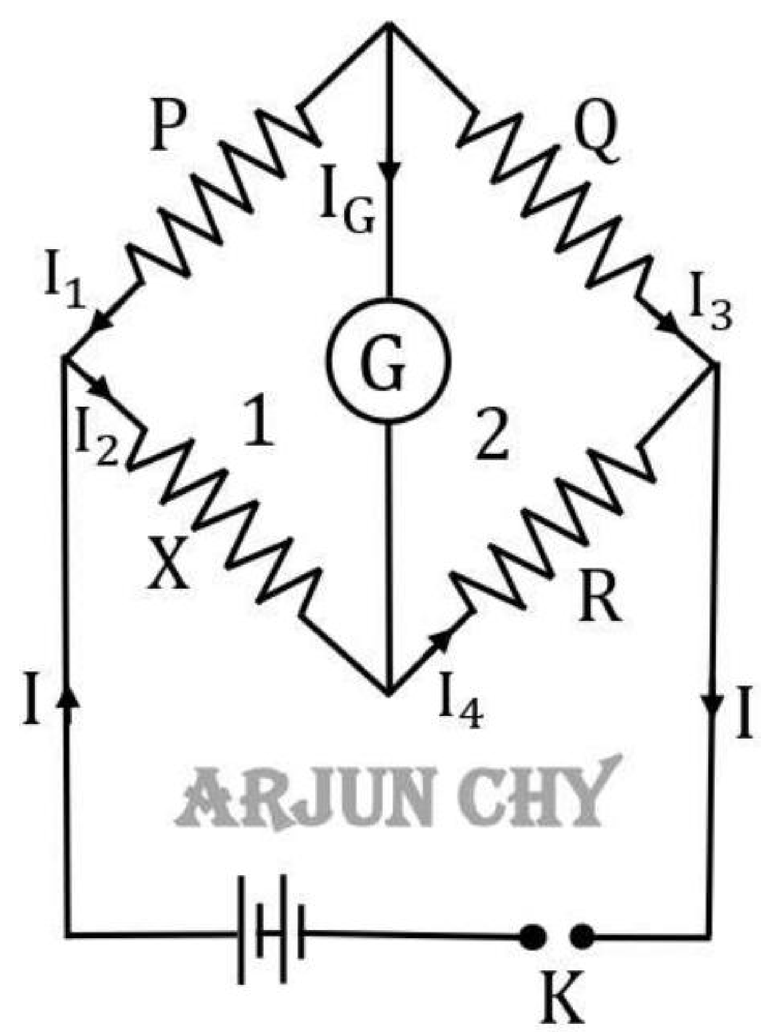

**Download from www.arjun00.com.np

At Point C,

$$I_3 + I_4 = I$$

Substituting value of I_3; we get,

$$I = I_1 + I_4$$

$$or,\ I_4 = I - I_1 \qquad \cdots\cdots (iii)$$

Now, using second law for different closed circuits,
For closed circuits (i);

$$I_1P - I_2X = 0$$

Substituting the value of I_2 form (i); we have,

$$I_1P - (I - I_1)X = 0$$

$$or,\ I_1P - I + I_1X = 0$$

$$or,\ I_1(P + X) - IX = 0 \qquad \cdots\cdots (iv)$$

www.arjun00.com.np

Similary, for closed circuit (ii);

$$I_3Q - I_4R = 0$$

Substituting the value of I_3 and I_4 form equation (ii) & (i); we get,

$$I_1Q - (I - I_1)R = 0$$

$$or,\ I_1(Q + R) - IR = 0 \qquad \cdots\cdots (v)$$

Multiplying equation $(iv)$by $(Q + R)$and equation $(v)$by $(P + X)$ and on subtraction; we have ,

$$\begin{array}{rl} & I_1(P + X)(Q + R) - IX(Q + R) = 0 \\ - & I_1(P + X)(Q + R) - IR(P + X) = 0 \\ \hline - & + \\ & IR(P + X) - IX(Q + R) = 0 \end{array}$$

**Download from www.arjun00.com.np

or, $I[R(P+X) - X(Q+R)] = 0$

or, $RP + RX - QX - RX = 0$

or, $RP = QX$

$$\therefore \frac{P}{Q} = \frac{X}{R}$$

This is the required relation for balanced condition of a wheatstone bridge.

3. Write Newton's formula for velocity of sound in air and explain how Laplace corrected it?

- Newton's Formula for Velocity of sound in Air $= \sqrt{\frac{E}{\rho}} = \sqrt{\frac{P}{\rho}}$

Velocity of sound in Air $= \sqrt{\frac{P}{\rho}}$

For air at N.T.P.; we have,

$P = 1.013 \times 10^5\ Nm^{-2}$ and, $\rho = 1.293\ kgm^{-3}$

www.arjun00.com.np

$$\therefore v = \sqrt{\frac{P}{\rho}} = \sqrt{\frac{1.013\times10^5}{1.293}} = 280\ ms^{-1}$$

However, the velocity of sound in air at NTP is found experimentally as 332 m/s which is quite greater than the value calculated above. Such difference in values shows that there are discrepancies in Newton's assumption and it needs correction.

**Download from www.arjun00.com.np

Laplace's correction

Laplace suggested that the change in pressure and volume of a gas due to the passage of sound wave is not isothermal as assumed by Newton but it is adiabatic. Therefore, appropriate modulus of elasticity is the **adiabatic bulk modulus**, $i.e.$, $\mathrm{E} = \mathrm{B_{adi}}$. Thus, velocity of sound in a gas is given by,

$$\mathrm{v} = \sqrt{\frac{\mathrm{B_{adi}}}{\rho}} \qquad \cdots\cdots (i)$$

Adiabatic equation of state is given by,

$$\mathrm{PV^{\gamma}} = \mathrm{Constant} \qquad \cdots\cdots (ii)$$

www.arjun00.com.np

Where, γ is ratio of the specific heat at constant pressure to the constant volume $i.e.$, $\gamma = \frac{\mathrm{C_P}}{\mathrm{C_V}}$.

Differentiating equation (ii); we get,

$$\gamma.\mathrm{p}.V^{\gamma-1}.\mathrm{dV} + \mathrm{V^{\gamma}dp} = 0$$

$$\gamma.\mathrm{p}.V^{\gamma-1}.\mathrm{dV} = -\mathrm{V^{\gamma}dp}$$

$$\Rightarrow \gamma.\mathrm{p} = \frac{-\mathrm{V^{\gamma}dp}}{V^{\gamma-1}.\mathrm{dV}} = \frac{-V.dp}{dv} = bulk\ modulus(B_{adi})$$

$$or, \quad \gamma.P = \mathrm{B_{adi}} \qquad \cdots\cdots (iii)$$

From equation (i) and (iii); we have,

$$\mathrm{v} = \sqrt{\frac{\gamma.P}{\rho}} \qquad \cdots\cdots (iv)$$

The Value of γ depends upon the nature of gas.

**Download from www.arjun00.com.np

For air;

$$\gamma = 1.40$$

$$\therefore \text{ Velocity of sound in air at N. T. P}(v) = \sqrt{\frac{\gamma . P}{\rho}} = \sqrt{\frac{1.4 \times 1.013 \times 10^5}{1.293}}$$

$$= 332 \text{ ms}^{-1}$$

This value agrees with experimental value.

4. State Bohr's postulates of hydrogen atom. Derive an expression for the energy of an electron in the nth orbit of hydrogen atom.

- The Bohr's postulates for atomic model are;

First postulate

An electron in an atom can revolve in certain specified fixed closed orbits only without radiating any energy. The specified non radiating orbits possess definite energy, such that the angular momentum of electron is h equal to exact multiple of $\frac{h}{2\pi}$.

www.arjun00.com.np

$$i.e., mvr = mw = \eta \frac{h}{2\pi}$$

where, m, is the mass of the electron.

r is the radius of the circular orbit.

v is the velocity of the electron.

n is the quantum number, it may be 1, 2, 3, ...

Second postulate

When an electron is in excited state jumps from an outer orbit to an inner orbit of less energy then it radiates a definite amount of energy

**Download from www.arjun00.com.np

given by,

$$hv = E_1 - E_2$$

Where, h is Planck's constant and value is equal to 6.62×10^{-34} Js.

v is the frequency of the radiation given out E_1 is the energy in the first orbit and E_2 is energy in the second orbit.

Expression for energy level of hydrogen atom

An electron remains in its orbit if the electrostatic force of attraction between the electron and the nucleus must be equal to the centrifugal force which tends to throw electron out of its orbit.

$$\text{Centrifugal force (F)} = \frac{mv^2}{r} \qquad \cdots\cdots (1)$$

$$\text{Force of attraction (F)} = \frac{Ze^2}{4\pi\varepsilon_0 r^2} \qquad \cdots\cdots (2)$$

www.arjun00.com.np

where, m = Mass of the electron

v = Velocity of electron

r = Radius of circular orbit

Z = Atomic number of an element (hydrogen)

Equating these two forces,

$$\frac{mv^2}{r} = \frac{Ze^2}{4\pi\varepsilon_0 r^2}$$

$$or, \qquad v^2 = \frac{Ze^2}{4\pi\varepsilon_0 r^2} \qquad \cdots\cdots (3)$$

According to Bohr's postulate, the angular momentum of moving electron should be integral multiple of $\frac{h}{2\pi}$.

$$i.e., \quad mvr = \frac{nh}{2\pi}$$

**Download from www.arjun00.com.np

$$or, \quad v = \frac{nh}{2\pi rm} \qquad \cdots\cdots (4)$$

where, 'n' is the principle quantum number.

From equation (3); we obtain,

$$\frac{n^2h^2}{2\pi^2r^2m^2} = \frac{Ze^2}{4\pi\varepsilon_0 mr}$$

$$or, \quad r = \frac{\varepsilon_0 n^2h^2}{\pi mZe^2}$$

∴ Radius of nth orbit for hydrogen,

$$r_n = \frac{\varepsilon_0 n^2h^2}{\pi mZe^2} = \frac{\varepsilon_0 n^2h^2}{\pi me^2} \qquad [\because Z = 1 \text{ for hydrogen atom}] \quad \cdots (5)$$

Total energy of an electron will be sum of its kinetic and potential energies.

$$\text{K. E. of the electron} = \frac{1}{2}mv^2 \qquad \cdots\cdots (6)$$

$$\text{or, } \text{K. E} = \frac{1}{2}m\left(\frac{Ze^2}{4\pi\varepsilon_0 mr}\right) \qquad [\text{From equation (3)}]$$

$$\therefore \text{K. E} = \frac{Ze^2}{8\pi\varepsilon_0 r} \qquad \cdots\cdots (7)$$

$$\text{P. E of the elctron} = -\frac{Ze^2}{4\pi\varepsilon_0 r} \qquad \cdots\cdots (8)$$

www.arjun00.com.np

The total energy of the electron in n^{th} orbit,

$$E_n = \text{P. E.} + \text{KE.} = -\frac{Ze^2}{4\pi\varepsilon_0 r} + \frac{Ze^2}{8\pi\varepsilon_0 r} = -\frac{Ze^2}{8\pi\varepsilon_0 r}$$

Substituting 'r' form equation (5); we have,

$$E_n = -\frac{me^4z^2}{8\varepsilon_0^2 n^2h^2} \qquad \cdots\cdots (9)$$

As the value of n increases, E_n also increases. Therefore, the outer orbits have greater energies than the inner orbits.

**Download from www.arjun00.com.np

5. Define stress and strain. Derived an expression for energy stored in stretched wire. Also find the energy density.

Stress

- Restoring force per unit area developed on a body during stretched or deformed body is called stress. Mathematically;

$$\text{Stress} = \frac{\text{Restoring force}}{\text{Area}}$$

The unit of stress is $\mathrm{N/m^2}$.

Strain

- The change produced in the dimensions of a body when it is subjected to external force is called strain. It is measured by the ratio between change in shape or size to the initial shape or size.

www.arjun00.com.np

i) Longitudinal strain or linear strain is measured by the ratio between the changes in length to initial length.

$$i.e., \quad \text{Linear strain} = \frac{\text{Change in length}}{\text{Initial length}}$$

ii) Volume or bulk strain is measured by the ratio between changes in volume to initial volume.

$$i.e., \quad \text{Volume or bulk strain} = \frac{\text{Change in Volume}}{\text{Initial volume}}$$

iii) Shear strain is angle of rotation of a line perpendicular to the fixed end. The strain is just a ratio between same physical quantities and has no units.

**Download from www.arjun00.com.np

Expression for Work Done in stretched wire.

Consider a suspended wire of length 'l' in which a stretching force is applied on its lower end. Then length of the wire will be increased. Let, 'e' is the increase in length. To increase, the length stretching force performs certain work. Since, force increases from 'O' to 'F';

$$\text{Average force } = \frac{F}{2}$$

$$\text{and, Work done } = \frac{F}{2} \times e = \frac{Fe}{2}$$

www.arjun00.com.np

$$\text{But, Young's modulus(Y)} = \frac{\frac{F}{A}}{\frac{e}{l}} = \frac{Fl}{eA}$$

$$or, \qquad F = \frac{YeA}{l}$$

$$\therefore \textbf{ Work (W)} = \boldsymbol{Avg\ force\ .displacement} = \frac{\boldsymbol{F}}{\boldsymbol{2}}.\boldsymbol{e} = \frac{\boldsymbol{Aye.e}}{\boldsymbol{2l}} = \frac{\boldsymbol{Aye^2}}{\boldsymbol{2l}}$$

The work done is stored in the wire as energy,

$$\therefore \boldsymbol{Energy} = \frac{\boldsymbol{Aye^2}}{\boldsymbol{2l}} = \frac{\mathbf{1}}{\mathbf{2}}\mathbf{YA} \times \frac{\boldsymbol{e^2}}{\boldsymbol{l}}$$

Last part:

Volume of the wire $= Al$

Thus, from the relation;

$$\text{Energy per unit volume or energy density } = \frac{1}{2} \times \frac{F}{A} \times \frac{e}{l}$$

$$\text{But, Stress } = \frac{F}{A}$$

$$\text{and, Strain } = \frac{e}{l}$$

$$\therefore \text{ Energy density } = \frac{1}{2} \times \text{ Stress} \times \text{Strain}$$

**Download from www.arjun00.com.np

6. What is photoelectric effect? Discuss Einstein's photoelectric equation.

- **Photoelectric effect** is the phenomenon of emission of electrons from a metal surface when it is exposed to electromagnetic radiations of a suitable frequency.

Einstein's photoelectric equation

- According to Plank's quantum theory of radiation, the energy associated with each photon of light of frequency 'f' is given by;

$$E = hf$$

where, 'h' is the Plank's constant.

When a photon of energy hf is incident on a metal surface,

a) A part of energy is used to knock out an electron from its atom. The minimum energy required just to liberate an electron from the surface of metal without imparting any kinetic energy to it is called work function 'ϕ' of the metal.

www.arjun00.com.np

b) The rest of the energy is used in providing the kinetic energy to eject photoelectron E_k. If 'm' is the mass and 'v' is the velocity of the photoelectron after the emission, them the kinetic energy of the electron is given by;

$$E_k = \frac{1}{2}mv^2 \qquad \cdots\cdots (i)$$

Thus,

$$hf = \phi + E_k$$

**Download from www.arjun00.com.np

$$\therefore hf = \phi + \frac{1}{2}mv^2 \qquad \cdots\cdots (ii)$$

This equation is known as Einstein photoelectric equation.

If f_0 be the threshold frequency of light for a given metal, then the work function ϕ becomes;

$$\phi = hf_0$$

Thus, the equation (i) can be written as,

$$\frac{1}{2}mv^2 = h(f - f_0) \qquad \cdots\cdots (iii)$$

www.arjun00.com.np

If λ and λ_0 be the wavelength of incident, photon and wavelength corresponding to the threshold frequency respectively, then,

$$f = \frac{c}{\lambda} \text{ and, } f_0 = \frac{c}{\lambda_0}$$

where, 'c' is the velocity of light in vacuum.

Hence,

$$\frac{1}{2}mv^2 = hc\left(\frac{1}{\lambda} - \frac{1}{\lambda_0}\right)$$

This is another form of Einstein's photoelectric equation.

Group "B"

**Download from www.arjun00.com.np

7. How will you convert a galvanometer into an ammeter?

➢ To convert galvanometer into ammeter

A galvanometer is converted to an ammeter by connecting a suitable low resistance across the galvanometer. The low resistance used for the purpose is called shunt resistance. Let 'S' be the shunt resistance.

Let, Galvanometer resistance = G

Current on galvanometer = I_g

Current on shunt = I_S

Shunt resistance = S

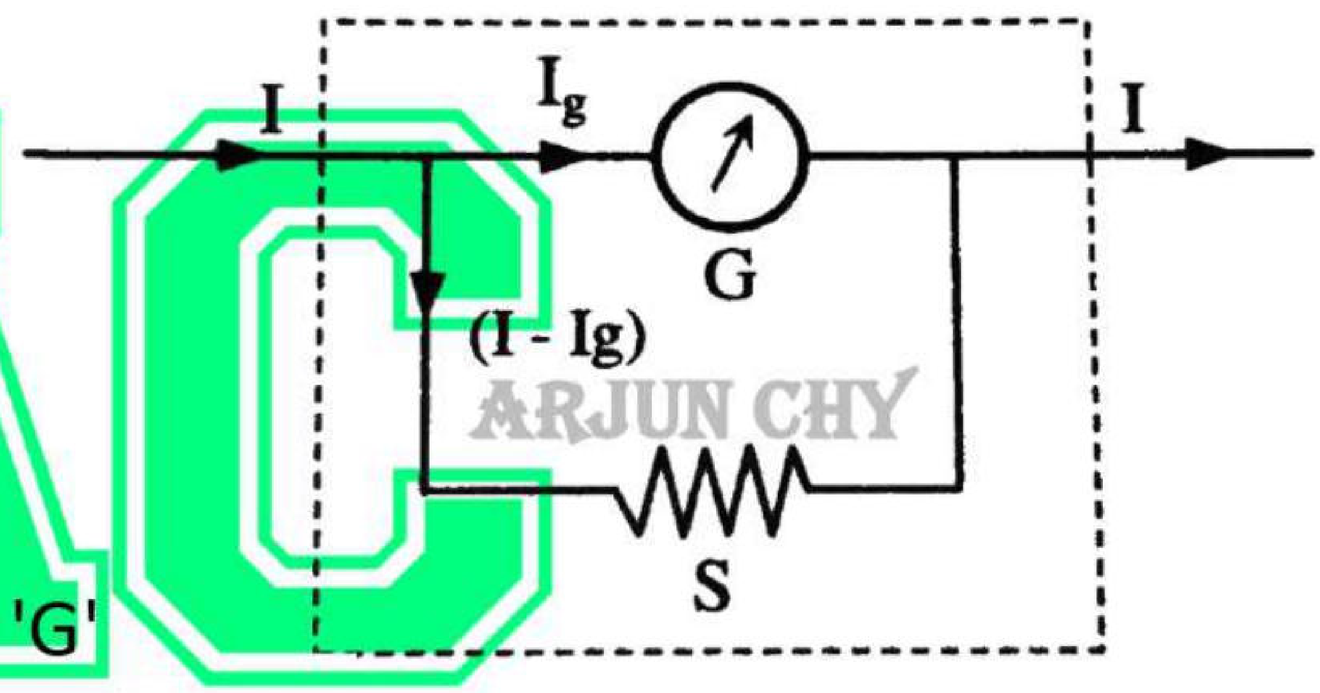

Then, form the figure;

p.d across 'S' = p.d. across 'G'

$$I_S S = I_g G$$

or, $S = \frac{I_g G}{I_S} = \frac{I_g G}{I - I_g}$ $\quad [\because\ I_S = I - I_g]$

By choosing suitable shunt resistance, galvanometer is converted to ammeter of range $(0 - I)$ Amperes.

**Download from www.arjun00.com.np

8. State and explain Faraday's laws of electrolysis.

- **There are two laws of electrolysis given by faraday which as follows;**

  i. **Faradays first laws of electrolysis**

  It states that the mass of a substance deposited or liberated in electrolysis is directly proportional to the electric charge that passes through the electrolyte.

  $i.e.,\ \mathbf{m} \propto \mathbf{q}$

  $\therefore \quad \mathbf{m = zq}$

  where, z is a constant and is called electrochemical equivalent (E.C.E.).

  If, $\mathbf{q = It}$

  $\therefore \quad \mathbf{m = zIt}$

  where, $\mathbf{I}$ is the current and $\mathbf{t}$ is the time.

www.arjun00.com.np

  ii. **Faraday's Second laws of electrolysis**

  It states that, the mass of different substances liberated in electrolysis by the passage of same quantity of electric charge is directly proportional to their respective chemical equivalent.

  $i.e.,\ \mathbf{M} \propto \mathbf{E}$

  $$\therefore \quad \frac{\mathbf{M}}{\mathbf{E}} = \mathbf{Constant}$$

**Download from www.arjun00.com.np

9. Discuss the various modes of vibration in closed organ pipe.

- Let a closed organ pipe of length 'l' closed at one end and open at other end. Now, a blast of air is blown at open end. A wave travels on the pipe from open end to closed end and is reflected back. The two opposite waves of same speed, frequency and amplitude reinforces inside the tube and forms a stationary wave.

The air at closed end cannot move and form a node. Similarly, at open end form an antinode. Hence, in a closed pipe there is always a node at the closed end and an antinode at the open end.

i) Fundamental mode or fundamental tone

The simple wave formed is with a node and an antinode. If the wavelength of the wave formed is λ_1 then, the distance between a node and the nearest antinode is $\frac{\lambda_1}{4}$. That is equal to the length 'l' of the tube Hence,

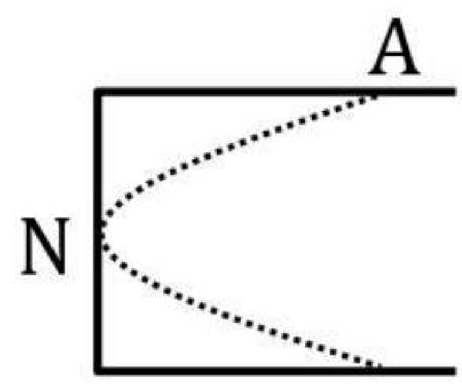

$$l = \frac{\lambda_1}{4}$$

$$\therefore \quad \lambda_1 = 4l$$

and, Fundamental frequency$(f_0) = \frac{v}{\lambda_1} = \frac{v}{4l}$

www.arjun00.com.np

This is the lowest note possible for a closed pipe and is called the fundamental frequency.

ii) First harmonic

Next possible vibration is two nodes and two antinodes as shown. The length of the tube is equal three fourth of the wavelength.

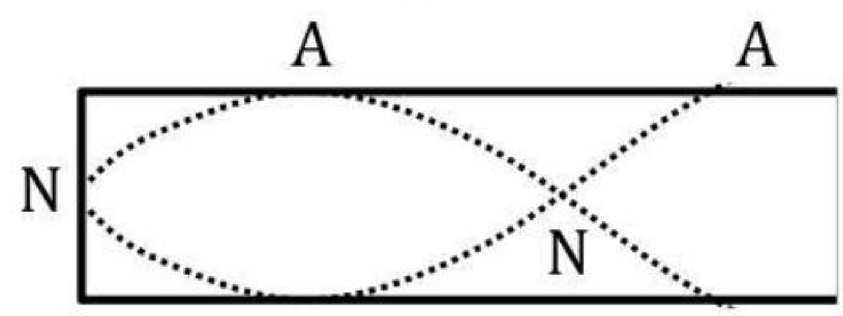

$$i.e., \qquad l = \frac{3\lambda_2}{4}$$

$$\therefore \quad \lambda_2 = \frac{4l}{3}$$

and, Frequency of the sound $(f_2) = \frac{v}{\lambda_2} = 3\frac{v}{4l} = 3f_0$

**Download from www.arjun00.com.np

iii) Third harmonic

Similarly, next possible mode of vibration is with three nodes and three antinodes. In this case the length and wavelength is related as;

$$l = \frac{5\lambda_3}{4}$$

$$\therefore \ \lambda_3 = \frac{4l}{5}$$

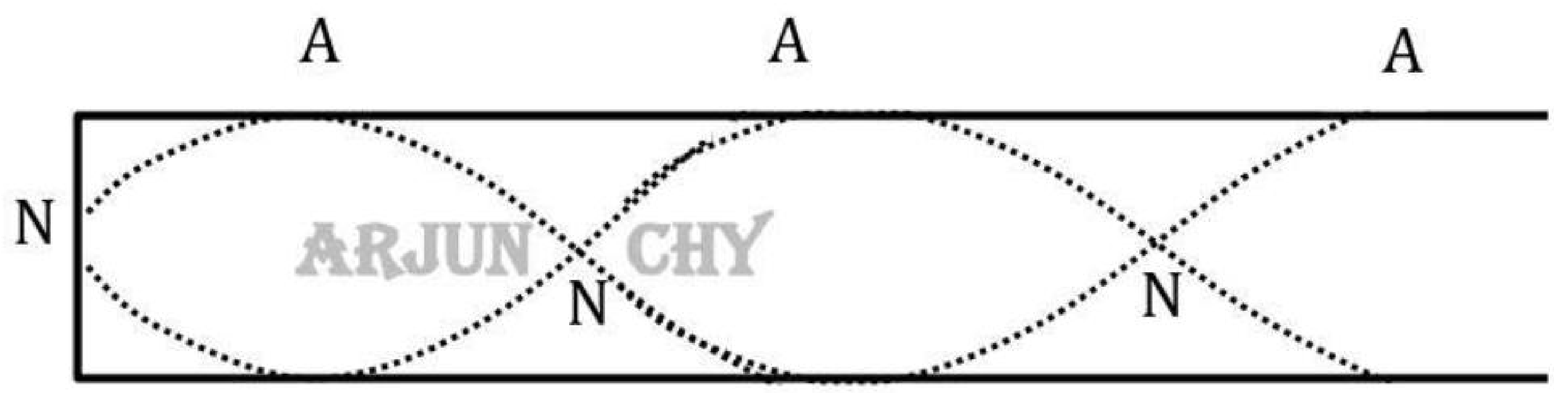

and, Frequency of the sound $(f_2) = \frac{v}{\lambda_3} = 5\frac{v}{4l} = 5f_0$

The frequencies obtained at a closed pipe are $f_0, 3f_0, 5f_0$ $etc. i.e.$, the closed pipe gives only odd harmonics.

10. What is X-ray? What are the importance properties of X-rays?

➢ **X-rays** are electromagnetic wave of shorter wavelength with high penetrating power.

❖ Properties of X-rays

- X-rays are fast moving electromagnetic wave as light but of shorter wavelength.
- It has high penetrating power.
- It affects photographic plates.
- It is not deflected by electric and magnetic fields.
- It ionizes gas particles.
- X-rays can ionize atoms and molecules of matter.
- They travel with a velocity of light $i.e. 3 \times 10^8 ms^{-1}$ in vacuum or air.
- Similar to light, X-rays can also produce photoelectric effect.

**Download from www.arjun00.com.np

11. Define semiconductor. Differentiate between intrinsic and extrinsic semiconductors.

- **A semiconductor** is a material whose electrical conductivity lies between those of conductors and insulators. Because their electric properties are very sensitive on adding small impurities, they are widely used in electronic devices. Silicon(Si) and germanium (Ge) are examples of semiconductors.

- **Intrinsic Semiconductor Vs Extrinsic Semiconductor**

Intrinsic Semiconductor	Extrinsic Semiconductor
It is a pure semiconductor.	It is an impure semiconductor formed by doping a small quantity of impurity atoms to the pure semiconductor.
Examples are crystalline forms of pure silicon and germanium.	Examples are silicon and germanium crystals with impurity atoms of arsenic or antimony indium.
The number of free electrons in conduction band and the number of holes in valence band is exactly equal and they are small in number.	The number of free electrons and holes is never equal. There is excess of electrons in n-type semiconductors and excess of holes in p-type semiconductors.
Its electrical conductivity is low.	Its electrical conductivity is high.
Its electrical conductivity is a function of temperature alone.	Its electrical conductivity depends upon the temperature as well as on the quantity of impurity atoms doped in the structure.

www.arjun00.com.np

**Download from www.arjun00.com.np

12. Differentiate between interference and polarization of light.

Characteristic	Interference	Polarization
Definition	Interference is the phenomenon where two or more coherent waves combine to form a resultant wave with varying amplitudes.	Polarization is the phenomenon where light waves vibrate predominantly in a specific direction or plane.
Nature of Light Waves	Interference occurs with coherent waves, which have the same frequency and a constant phase relationship.	Polarization can occur with any type of light, whether it's coherent or incoherent.
Principle	Interference is based on the superposition principle, where waves add up constructively or destructively based on their phase relationship.	Polarization is based on the orientation of the oscillations of light waves in a particular direction.
Types	Interference can be categorized into two main types: constructive interference (waves reinforce each other) and destructive interference (waves cancel each other out).	Polarization can be linear (light waves oscillate in a single plane), circular (light waves rotate as they propagate), or elliptical (a combination of linear and circular polarization).

www.arjun00.com.np

Group 'B'

**Download from www.arjun00.com.np

13. A constant voltage a.c. generator of 20V, 50Hz is connected with a resistor of resistance 2.0 Ω, a coil of inductance 5.0H and a capacitor of capacitance 2.0μF.Calculate the current flowing through on circuit.

➢ **Solution**

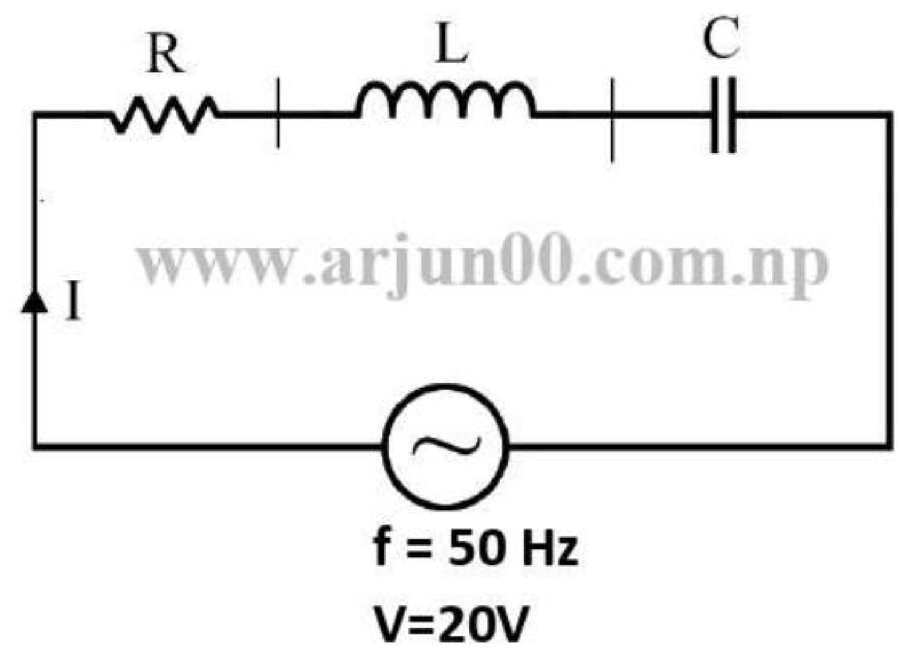

Given that;

$R = 2\Omega$

$L = 5H$

$C = 2 \times 10^{-6}F$

Current through Circuit $I = ?$

We Have,

Inductance Reactance, $X_L = WL = 2\pi fL$

$$= 2\pi \times 50 \times 5$$

$$X_L = 1570.79\ \Omega$$

Capacitive Reactance, $X_C = \frac{1}{WC}$

$$= \frac{1}{2\pi \times 50 \times 2 \times 10^{-6}}$$

www.arjun00.com.np

$$X_C = 1591.549\ \Omega$$

Since, $X_C > X_L$ so,

In LCR Circuit, $Z = \sqrt{R^2 + (X_C - X_L)^2}$

Let I be current through Circuit,

$$I = \frac{V}{Z} = \frac{V}{\sqrt{R^2 + (X_C - X_L)^2}}$$

$$I = \frac{20}{\sqrt{2^2 + (1591.549 - 1570.79)^2}}$$

$$\boldsymbol{I = 0.958\ \ \text{Ampere}}$$

**Download from www.arjun00.com.np

14. A battery of E.m.f 24V and internal resistance 'r is connected to a circuit having two parallel resistance of 3 Ω and 6 Ω are series with 8 Ω resistance. Current flowing in 3 Ω resistor is 0.8A. Calculate the current in 6 Ω resistance, internal resistance and p.d. of battery.

➢ **Solution**

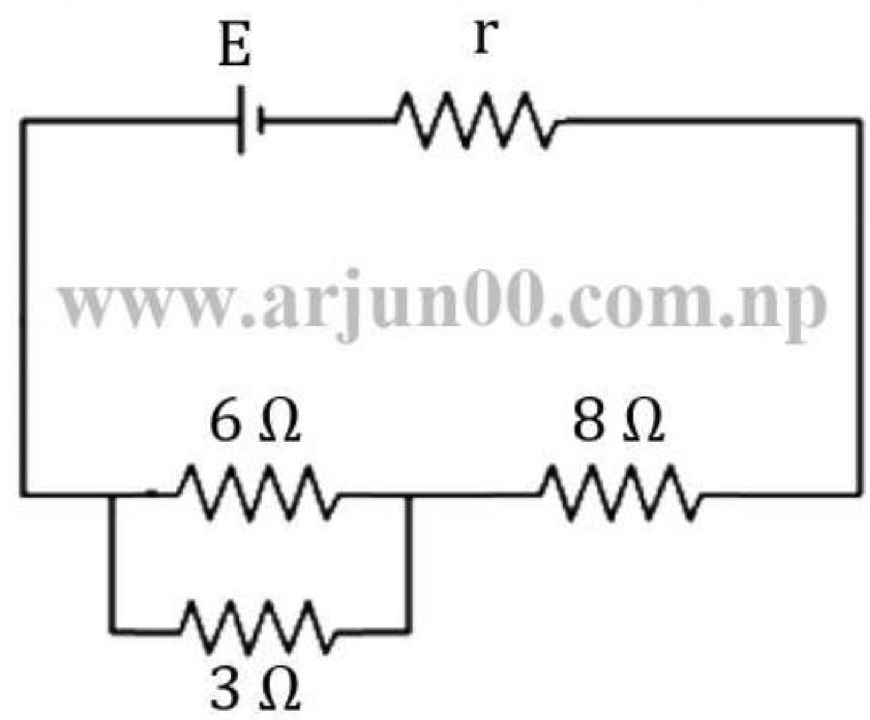

Given that;

$$r = ?$$
$$R_1 = 3\ \Omega$$
$$R_2 = 6\ \Omega$$
$$R_3 = 8\ \Omega$$

Now, the equivalent resistance of R_1 and R_2 be R_{12} and calculated as;

$$\frac{1}{R_{12}} = \frac{1}{R_1} + \frac{1}{R_2}$$
$$= \frac{1}{3} + \frac{1}{6}$$
$$= \frac{1}{2}$$

$$\therefore\ R_{12} = \mathbf{2\ \Omega}$$

Equivalent resistance $(R_{eq}) = 2 + 8 = 10\ \Omega$

We have,

$$E = IR_{eq} + Ir$$

$$\therefore\ r = \frac{E - IR_{eq}}{I}$$
$$= \frac{24 - 2 \times 10}{2}$$
$$= \mathbf{2\ \Omega}$$

**Download from www.arjun00.com.np

and, Total resistance on circuit $(R) = R_{12} + R_3 + r$

$$= 2 + 8 + 2$$

$$= \mathbf{12\ \Omega}$$

From Ohm's laws; we have,

$$I = \frac{E}{R} = \frac{24}{12}$$

$$= \mathbf{2\ A}$$

and, Potential difference across equivalent resistance

$$(V') = IR_{12}$$

www.arjun00.com.np

$$= 2 \times 2$$

$$= \mathbf{4\ V}$$

Again,

Potential difference across R_1 = Potential difference across equivalent resistance R_{12}.

or, $I_1 R_1 = 4$

or, $I_1 = \frac{4}{R_1}$

$$= \frac{4}{3} = \mathbf{1.33\ A}$$

and,

Terminal potential difference of battery $(V) = E - Ir$

$$= 24 - (2 \times 2)$$

$$= \mathbf{20\ V}$$

**Download from www.arjun00.com.np

15. The critical angle of glass is $42°$. What's the polarizing angle?

➢ **Solution**

Given that;

Critical angle $(C) = 42°$

Polarizing angle $(i_P) = ?$

From Brewster's law; we have,

$\mu = \tan i_P$; where i_P is polarizing angle.

www.arjun00.com.np

or, $\frac{1}{\sin C} = \tan i_P$; where C is the critical angle.

or, $\frac{1}{\sin 42°} = \tan i_P$

or, $\frac{1}{0.707} = \tan i_P$

or, $i_P = \tan^{-1}(1.494)$

$= \mathbf{56.20°}$

Hence, Polarizing angle is $56.20°$.

16. Find the half-life period of radioactive material if its activity has decayed to $1/128^{th}$ of its initial activity after 50 days.

➢ **Solution**

Given that;

Time taken $(t) = 50$ days

Half-life $\left(T_{\frac{1}{2}}\right) = ?$

Let, Initial activity $= A_0$

Final activity $(A) = \frac{A_0}{128}$

**Download from www.arjun00.com.np

or, $\frac{A_0}{128} = \frac{1}{128}$

We know that;

$$A = A_0 e^{-\lambda t} \quad \ldots\ldots\ldots\ldots\ldots\ldots\ldots\ldots\ldots\ldots (1)$$

Where, t= time period

A= Activity after time't'

A_0= initial Activity

λ= decay constant

Also,

$$\lambda = \frac{0.693}{T_{\frac{1}{2}}} \quad \ldots\ldots\ldots\ldots\ldots\ldots\ldots\ldots\ldots\ldots (2)$$

Where, $T_{\frac{1}{2}}$ = half life

www.arjun00.com.np

From (1) & (2)

$$A = A_0\, e^{-\left[\frac{0.693}{T_{\frac{1}{2}}} \times t\right]}$$

$$or, \quad \frac{A}{A_0} = e^{-\left[\frac{0.693}{T_{\frac{1}{2}}} \times t\right]}$$

$$or, \quad \frac{1}{128} = e^{-\left[\frac{0.693}{T_{\frac{1}{2}}} \times t\right]}$$

**Download from www.arjun00.com.np

$$or, \quad \frac{1}{128} = \frac{1}{e^{\left(\frac{0.693 \times t}{T_{\frac{1}{2}}}\right)}}$$

$$or, \quad 128 = e^{\left(\frac{0.693 \times t}{T_{\frac{1}{2}}}\right)}$$

Taking Both Side Natural logarithm In,

$$\text{In}\,(128) = \text{In}\, e^{\left(\frac{0.693 \times t}{T_{\frac{1}{2}}}\right)}$$

$$\text{In}\,(128) = \frac{0.693 \times t}{T_{\frac{1}{2}}} \qquad [\because \text{In}\, e^{a} = a]$$

www.arjun00.com.np

$$T_{\frac{1}{2}} = \frac{0.693 \times 50}{\ln(128)}$$

$$= \mathbf{7.141\ days}$$

Hence, required half-life of given radioactive source is 7.141 days

**Download from www.arjun00.com.np

17. An electron is revolving in a uniform magnetic field of strength 1.5×10^{-2}T. The radius of circular path is $1.2 \times 10^{-2} m$. Through what potential difference was the electron initially accelerated from rest? [e/m for electron = $1.76 \times 10^{11} c/kg$].

➢ Solution

Given that;

Magnetic field strength (B) $= 1.5 \times 10^{-2}$T.

Radius of the path (r) $= 1.2 \times 10^{-2} m$.

Specific charge of electron$\left(\frac{e}{m}\right) = 1.76 \times 10^{11} c/kg$

Potential difference (V) =?

Now,

$$Bev = \frac{mv^2}{r}$$

$$\therefore \quad v = \frac{Ber}{m} = \left(\frac{e}{m}\right) Br$$

$$= 1.76 \times 10^{11} \times 1.5 \times 10^{-2} \times 1.2 \times 10^{-2}$$

$$= 3.168 \times 10^{7} ms^{-1}$$

Again, We have,

$$\frac{1}{2} mv^2 = eV$$

$$or, \left(\frac{e}{m}\right) V = \frac{1}{2} v^2$$

$$\text{or, } 1.76 \times 10^{11} \times V = \frac{1}{2} (3.168 \times 10^{7})^2$$

$$\therefore \quad \mathbf{V = 2851.2 \text{ Volts}}$$

www.arjun00.com.np

**Download from www.arjun00.com.np

18. Find the height to which water will rise in capillary tube of 1.4mm diameter, surface tension of water is $7.2 \times 10^{-2} N/m$. and angle of contact is $10°$.

➢ **Solution**

Given that;

Diameter of capillary tube (d) $= 1.4\text{mm} = 1.4 \times 10^{-3}\text{m}$

$\therefore$ Radius of capillary tube (r) $= 0.7 \times 10^{-3}\text{m}$

Surface tension (T) $= 7.2 \times 10^{-2}\text{N/m}$

Density of liquid (ρ) $= 1000\ \text{Kgm}^{-3}$

Angle of Contact (θ) $= 10°$

Height raised (h) =?

Now,

$$\text{Height raised in capillary (h)} = \frac{2T\cos\theta}{r\rho g}$$

$$= \frac{2 \times 7.2 \times 10^{-2} \times \cos 10°}{0.7 \times 10^{-3} \times 1000 \times 10}$$

$$= \mathbf{0.0203\ m}$$

i.e., Height to which water will rise in a capillary tube is 0.0203 m

www.arjun00.com.np

19. Two capacitors of capacitance $4\mu F$ and $12\mu F$ respectively are connected in series and the combination connected momentarily across a 200V battery. The charged capacitors are now isolated and connected in parallel, similar charged plates connected together. What would be the common potential difference on the capacitor.

➢ **Solution**

**Download from www.arjun00.com.np

Given that;

Capacitance of first capacitor $(C_1) = 4\ \mu F = 4 \times 10^{-6} F$

Capacitance of second capacitor $(C_2) = 12\ \mu F = 12 \times 10^{-6} F$

Potential difference $(V) = 200\ V$

When the capacitors are connected in series, then the equivalent capacitance (C) is obtained as

$$\frac{1}{C} = \frac{1}{C_1} + \frac{1}{C_2}$$

$$\text{or, } C = \frac{C_1 \times C_2}{C_1 + C_2} = \frac{4 \times 10^{-6} \times 12 \times 10^{-6}}{(4+12) \times 10^{-6}} = 3 \times 10^{-6} F$$

Charge on each capacitor

$$q = q_1 = q_2 = CV$$
$$= 3 \times 10^{-6} \times 200$$
$$= \mathbf{6 \times 10^{-4} C}$$

Let V be the common potential difference after parallel combination of capacitors.

www.arjun00.com.np

Then, total charge in parallel combination $= C_1V + C_2V$

$$= (C_1 + C_2)V$$
$$= (4 + 12) \times 10^{-6} V$$
$$= \mathbf{16 \times 10^{-6} V}$$

Since, total charge is conserved

$\therefore$ Total charge in series = Total charge in parallel

$$\text{or, } q_1 + q_2 = 16 \times 10^{-6} V$$
$$\text{or, } 2 \times 6 \times 10^{-4} = 16 \times 10^{-6} V$$
$$\therefore V = \frac{12 \times 10^{-4}}{16 \times 10^{-6}} = \mathbf{75\ volt}.$$

**Download from www.arjun00.com.np

20. Velocity of sound in air at 0^{-c} is 332m/s. Find the change in velocity per degree raise in temp.

➢ **Solution**

Given that;

$$V_0 = 332\text{m/s}$$
$$T_0 = 0°C = 273k$$

V be velocity per degree raise in temperature 't'

$$t = 1°C, (T = T_0 + t)$$

Since,

$$V \propto \sqrt{T}$$

www.arjun00.com.np

$$\frac{V}{V_0} = \sqrt{\frac{T_0+t}{T_0}}$$

$$V = V_0 \left(\frac{T_0+t}{T_0}\right)^{\frac{1}{2}}$$

$$V = V_0 \left(1 + \frac{t}{T_0}\right)^{\frac{1}{2}}$$

Using binominal, negating higher terms

$$V = V_0 \left(1 + \frac{t}{2T_0}\right)$$

$$V = V_0 \left(1 + \frac{1}{2 \times 273}\right)$$

$$= 332\left(1 + \frac{1}{2 \times 273}\right)$$

$$V = 332.608 \text{ m/s}$$

$$\approx 332.61\ m/s$$

**Download from www.arjun00.com.np

Change in Velocity $= V - V_0$

$$= 332.61 - 332$$

$$= \mathbf{0.61\ m/s}$$

Change in Velocity per degree raise in temp $= \mathbf{0.61\ m/s}$

–The End –

** "If you find a mistake in Question/Answer, Kindly take a Screenshot and email to info@arjun00.com.np "

**This Solution is for Educational Purpose Only. If you misuse it, we are not Responsible.

Support us

A Small gift will help maintain this website. →

Feel Free to Read at no cost.

Support us on: fonepay

you can donate as you wish.

ARJUN CHAUDHARY

2222120014283943

**Download from www.arjun00.com.np

Engg. Physics –II__(Engg. All) 2nd Sem

(2078) Question Paper Solution.

Compile & Written by © Arjun Chy
Website :- www.arjun00.com.np
Facebook :-www.facebook.com/Arjun00.com.np

1. Define electric potential and intensity at a point due to a charge Obtain an expression for the potential difference between two points r_1 and r_2 from charge +Q.

- The potential difference between two points inside the electric field is defined as the amount of work done in moving a unit positive test charge from one point another point against the electric field.
- The electric field intensity at a point is the force experienced by a unit of positive charge placed at that point. $i.e,\ \mathrm{E}\ \frac{\mathrm{F}}{\mathrm{q_o}}$.
- Suppose a unit positive charge is at any point 'P' so that $\mathrm{OP} = \mathrm{X}$. Since the force experienced by the units positive test charge is equal to the electric field intensity at that point.

$$i.e.,\ \mathrm{F} = \frac{1}{4\pi\varepsilon_0}\frac{\mathrm{Q}}{\mathrm{X}^2}$$

Thus, the small work done in moving a unit positive charge from point 'P' to point 'Q' is;

www.arjun00.com.np

$$\mathrm{dw} = \mathrm{F} \times (-\mathrm{dx}) = -\frac{1}{4\pi\varepsilon_0}\frac{\mathrm{Q}}{\mathrm{X}^2}\mathrm{dx}$$

Negative sign shows that unit positive charge and displacement are in opposite direction.

Therefore, total work done in moving a unit positive charge 'B' to point 'A' is;

**Download from www.arjun00.com.np

$$W_{BA} = \int_{r_1}^{r_2} \frac{1}{4\pi\varepsilon_0}\frac{Q}{X^2}dx = -\frac{Q}{4\pi\varepsilon_0}\left[-\frac{1}{X}\right]_{r_1}^{r_2} = \frac{Q}{4\pi\varepsilon_0}\left[\frac{1}{r_2} - \frac{1}{r_1}\right]$$

By definition, the potential difference between two points 'A' to 'B' is;

$$V_{AB} = W_{BA}$$

$$\therefore V_{AB} = \frac{Q}{4\pi\varepsilon_0}\left(\frac{1}{r_2} - \frac{1}{r_1}\right)$$

This gives the potential difference between two points 'A' and 'B'.

2. Describe the Wheatstone bridge circuit and deduce the condition for balance using Kirchhoff's law.

- Wheatstone bridge consists of four resistances $'P', 'Q', 'R'$ and $'X'$ connected to a battery as shown in the figure. The currents flowing through them are I_1, I_2, I_3 and I_4 respectively. The current through the galvanometer is I_G and its resistance is 'G'.

Divide the bridge into closed circuits (1), (2) and (3).

Applying Kirchhoff's first law at different points,

At Point A,

$$I - (I_1 + I_2) = 0$$

$$or,\ \ I = I_1 + I_2$$

$$\therefore\ \ I_2 = I - I_1 \qquad \cdots\cdots\cdots (1)$$

At Point B,

$$I_1 = I_G + I_3$$

At balance condition; $I_G = 0$

$$\therefore\ \ I_3 = I_1 \qquad \cdots\cdots\cdots (2)$$

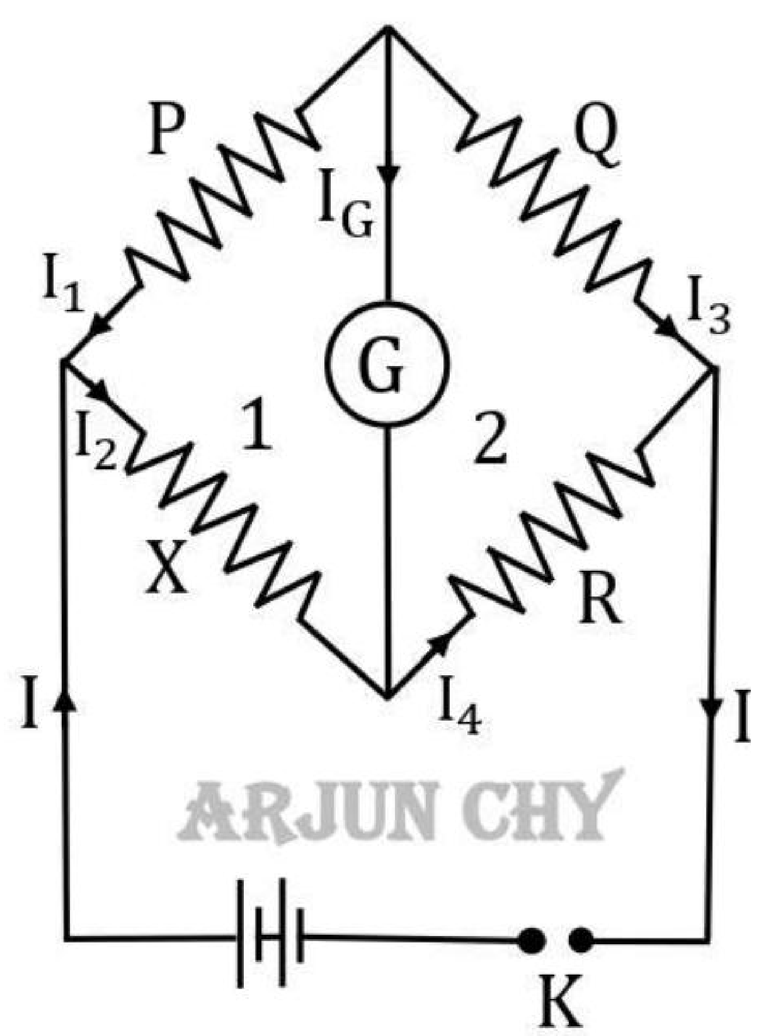

**Download from www.arjun00.com.np

At Point C,

$$I_3 + I_4 = I$$

Substituting value of I_3; we get,

$$I = I_1 + I_4$$

$$or,\ \ I_4 = I - I_1 \qquad \cdots\cdots (3)$$

Now, using second law for different closed circuits,
For closed circuits (1);

$$I_1 P - I_2 X = 0$$

www.arjun00.com.np

Substituting the value of I_2 form (1); we have,

$$I_1 P - (I - I_1)X = 0$$

$$or,\ \ I_1 P - I + I_1 X = 0$$

$$or,\ \ I_1(P + X) - IX = 0 \qquad \cdots\cdots (4)$$

Similary, for closed circuit (2);

$$I_3 Q - I_4 R = 0$$

Substituting the value of I_3 and I_4 form equation (2) & (1); we get,

$$I_1 Q - (I - I_1)R = 0$$

$$or,\ \ I_1(Q + R) - IR = 0 \qquad \cdots\cdots (5)$$

Multiplying equation (4)by $(Q + R)$and equation (5)by $(P + X)$ and on subtraction; we have ,

$$\begin{array}{r} I_1(P + X)(Q + R) - IX(Q + R) = 0 \\ -\ I_1(P + X)(Q + R) \underset{+}{-} IR(P + X) = 0 \\ \hline IR(P + X) - IX(Q + R) = 0 \end{array}$$

**Download from www.arjun00.com.np

or, $I[R(P+X) - X(Q+R)] = 0$

or, $RP + RX - QX - RX = 0$

or, $RP = QX$

$$\therefore \frac{P}{Q} = \frac{X}{R}$$

This is the required relation for balanced condition of a wheatstone bridge.

3. State Bio Savart's law. Use this law to find the magnetic field at a point due to current carrying long straight conductor.

- Biot-Savart law or Laplace's law gives the magnitude of the magnetic field $\vec{B}$ produced due to the current flowing conductor.

Suppose a conductor XY of length 'l' is carrying current 'I'. Suppose MN is a small element of conductor of length Δl. There is a point 'P' at a distance 'r' from the centre 'O' of the element Δl. Suppose ΔB is the flux density of the magnetic field at a point 'P' due to a small element Δl. **Then, according to Biot-Savart law; we can write,**

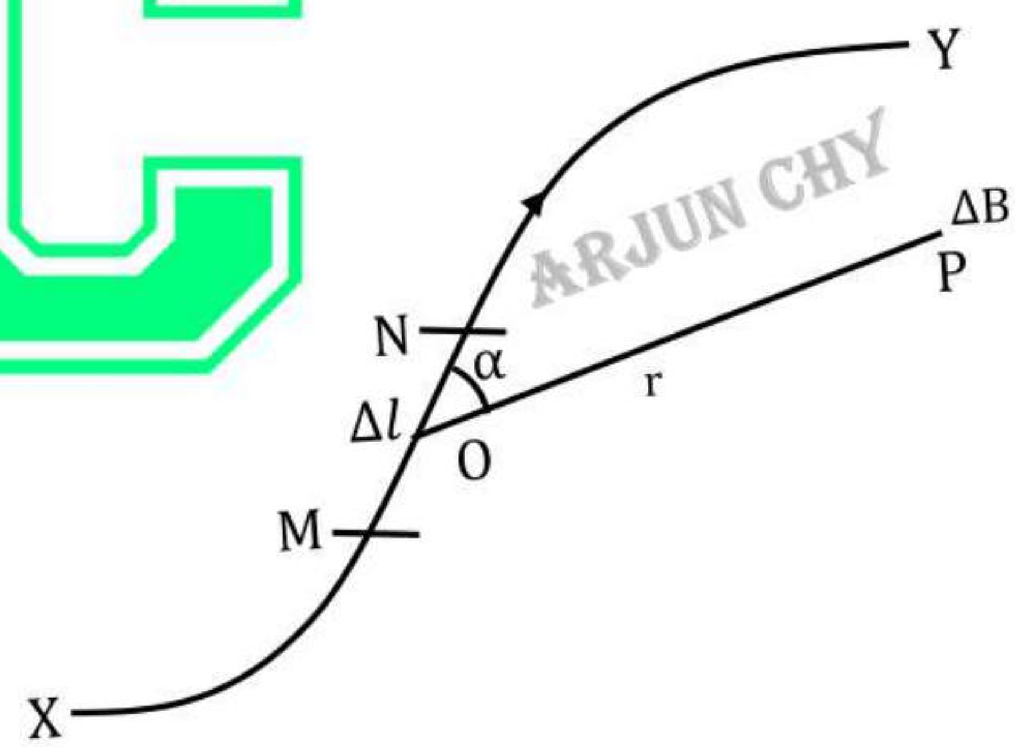

Biot - Savart law

$$\Delta B \propto I \quad \cdots\cdots (1)$$

$$\Delta B \propto \Delta I \quad \cdots\cdots (2)$$

$$\Delta B \propto \frac{1}{r^2} \quad \cdots\cdots (3)$$

$$\Delta B \propto \sin\alpha \quad \cdots\cdots (4)$$

**Download from www.arjun00.com.np

where, α is angle between Δl and 'r'. Combining (1), (2), (3) and (4); we obtain,

$$\Delta B \propto \frac{I\Delta l \sin\alpha}{r^2}$$

$$or, \qquad \Delta B = k\,\frac{I\Delta l \sin\alpha}{r^2} \qquad \cdots\cdots (5)$$

where, k is proportionality constant and its value depends on the system of unit and medium chosen.

For S.I. system (in air),

$$k = \frac{\mu_0}{4\pi}$$

where, $\mu_0 = 4\pi \times 10^{-7}\,Hm^{-1}$ which is called permeability of vacuum. Thus, equation (5) can be written as;

$$\Delta B = \frac{\mu_0}{4\pi}\frac{I\Delta l \sin\alpha}{r^2}$$

The total magnetic field $\vec{B}$ due to a current flowing through conductor at any point 'P' is;

$$B = \int dB = \int \frac{\mu_0}{4\pi}\frac{I\Delta l \sin\alpha}{r^2} = \frac{\mu_0}{4\pi}\int \frac{I\Delta l \sin\alpha}{r^2}$$

Magnetic field at a point due to a long straight conductor

Let AC is a long straight wire carrying current along 'A' to 'C'. If 'P' is a point near to the wire. Suppose a small element XY of length dl makes an angle α with the line joining element and the point 'P'. Then according to Biot Savart law magnetic field at 'P' is given by,

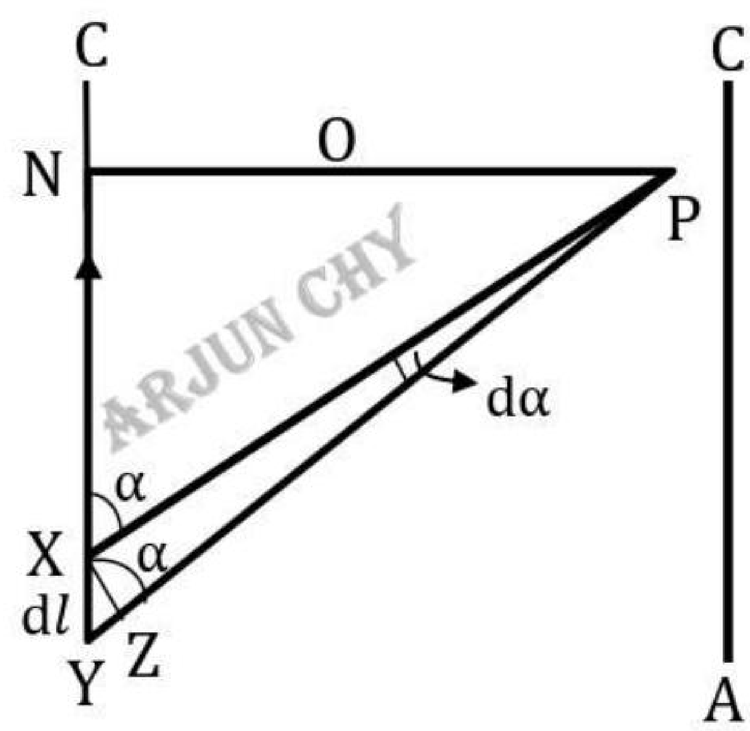

**Download from www.arjun00.com.np

$$dB = \frac{\mu_0 I\, dl \sin\alpha}{4\pi r^2} \qquad \cdots\cdots (i)$$

From ΔPNX; we have,

$$\sin\alpha = \frac{PN}{PX}$$

or, $PN = PX \sin\alpha$

or, $a = r \sin\alpha$

or, $r = \dfrac{a}{\sin\alpha} \qquad \cdots\cdots (ii)$

Draw XZ perpendicular to PY, since XY is small. Thus,

$$\measuredangle XYZ \approx \alpha$$

From ΔXYZ; we have,

$$\sin\alpha = \frac{XZ}{XY}$$

$$\therefore XZ = XY \sin\alpha = dl \sin\alpha \qquad \cdots\cdots (iii)$$

If XZ makes small angle dα at 'P'; then,

www.arjun00.com.np

$$\sin d\alpha = \frac{XZ}{PX}$$

Since, dα is very small. Thus, $\sin d\alpha = d\alpha$

$$\therefore \quad d\alpha = \frac{XZ}{PX}$$

or, $XZ = PX\ d\alpha = r\, d\alpha$

Comparing with equation (iii); we have,

$$XZ = r\, d\alpha = dl \sin\alpha$$

**Download from www.arjun00.com.np

Again, substituting the value of dl sin α in equation (i); we get ,

$$dB = \frac{\mu_0 I\, dl \sin\alpha}{4\pi r^2} = \frac{\mu_0 I\, r dl}{4\pi r^2} = \frac{\mu_0 I\, dl}{4\pi r}$$

Substituting the value of 'r' from equation (ii); we have,

$$dB = \frac{\mu_0 I\, d\alpha \sin\alpha}{4\pi\alpha}$$

For infinite long wire a varies from 0 to π.

Total field at 'P' is given by integrating the relation.

$$i.e., B = \int_0^{\pi} dB = \frac{\mu_0}{4\pi\alpha}\int_0^{\pi}\frac{I\sin\alpha d\alpha}{\alpha} = \frac{\mu_0 I}{4\pi\alpha}[-\cos\alpha]_0^{\pi} = \frac{\mu_0 I}{4\pi\alpha}[-(-1-1)]$$

$$= \frac{\mu_0 I}{2\pi\alpha}$$

This is the magnetic field 'B' due to a long straight wire at a point.

www.arjun00.com.np

4. Explain, why it is not possible to have interference with two head light of a motor car. Describe young's double slit experiment for the measurement of wavelength of monochromatic source of light.

- An interference pattern is obtained only when the two head lights is coherent. Two sources of light are said to be coherent if they emit continuous light waves of the same frequency, same wavelength and have zero phase difference or constant phase difference at all times. But it is not possible for two independent sources to be coherent. Hence two head lights held closed together will not produce an interference pattern on a distant screen.

Measurement of the Wavelength of Light

- Newton's ring can be used to measure the wavelength of a

**Download from www.arjun00.com.np

monochromatic source of light. An experimental arrangement for the determination of wavelength of sodium light is shown in Figure. S is a source of sodium light.

A parallel beam of light from the lens L_1 is reflected by the glass plate G inclined at an angle of 45° to the horizontal. L is a plano-convex lens of large focal length. Newton's strings are viewed through the eyepiece of the travelling microscope M focused on the air film. Circular bright and dark rings are seen with the dark central fringe. With the help of the travelling microscope, measure the diameter of the nth dark ring.

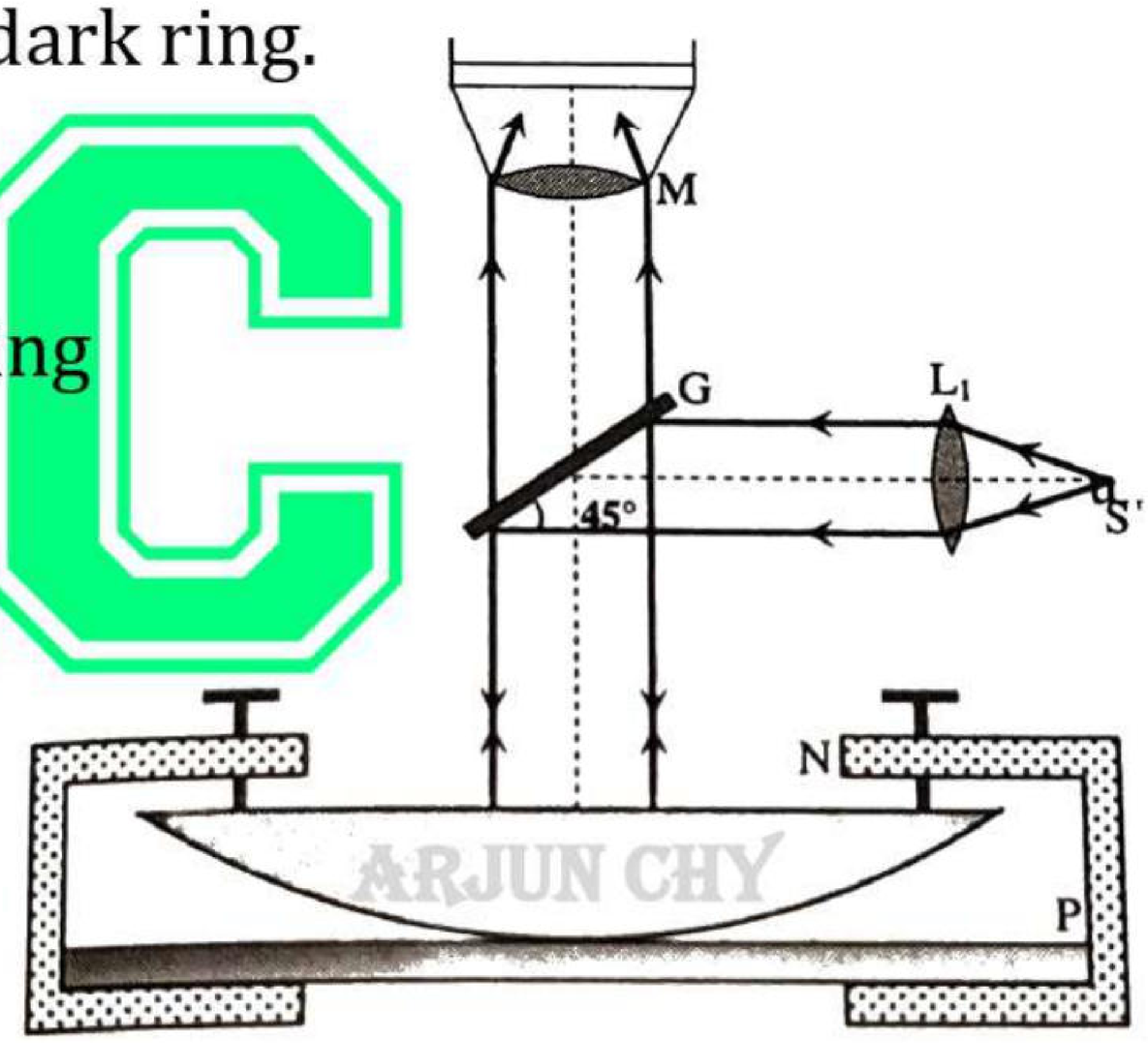

Fig :- Arrangement for measurement of wavelength of light.

Let D_n be the diameter of the nth ring

and $r_n^2 = n\lambda R$

But $r_n = \frac{D_n}{2}$,

$$\frac{{D_n}^2}{2} = n\lambda R$$

$$or,\ {D_n}^2 = 4n\lambda R \qquad \cdots\cdots (i)$$

The diameter of the $(n+m)^{th}$ dark ring is Measured. Let it be D_{n+m}

$$\therefore\ (D_{n+m})^2 = 4(n+m)\lambda R \qquad \cdots\cdots (ii)$$

**Download from www.arjun00.com.np

Subtracting (i) form (ii), We get

$$(D_{n+m})^2 - (D_n)^2 = 4m\lambda R$$

$$or, \lambda = \frac{(D_{n+m})^2 - (D_n)^2}{4\,mR} \qquad \cdots\cdots (iii)$$

Hence, the wavelength λ of the sodium light can be measured.

5. Define work function and stopping potential. Derive Einstein's Photo electric equation.

- Let ϕ be the energy used up in liberating the electrons from the metal surface and $\frac{1}{2}mv^2$ is the K.E. of the photoelectron. This minimum energy needed to liberate the electron from the surface is called the work function. Therefore,

Work function = Energy of the Photon − K.E. of the electron

- The minimum retarding potential at which photoelectric current becomes zero is called stopping potential denoted by V_0.

www.arjun00.com.np

V_0 stops the photoelectrons with maximum kinetic energy from reaching the anode and hence name stopping potential. If m is mass of emitted photoelectron and $V_{max.}$ is its maximum velocity, then

$$\mathbf{K.E._{max.} = e\,V_0 = \frac{1}{2}\,m\,v^2_{max.}}$$

**Download from www.arjun00.com.np

Einstein's photoelectric equation

- According to Plank's quantum theory of radiation, the energy associated with each photon of light of frequency 'f' is given by;

$$E = hf$$

where, 'h' is the Plank's constant.

When a photon of energy hf is incident on a metal surface,

a) A part of energy is used to knock out an electron from its atom. The minimum energy required just to liberate an electron from the surface of metal without imparting any kinetic energy to it is called work function 'ϕ' of the metal.

b) The rest of the energy is used in providing the kinetic energy to eject photoelectron E_k. If 'm' is the mass and 'v' is the velocity of the photoelectron after the emission, them the kinetic energy of the electron is given by;

www.arjun00.com.np

$$E_k = \frac{1}{2}mv^2 \qquad \cdots\cdots (i)$$

Thus,

$$hf = \phi + E_k$$

$$\therefore\ hf = \phi + \frac{1}{2}mv^2 \qquad \cdots\cdots (ii)$$

This equation is known as Einstein photoelectric equation.

If f_0 be the threshold frequency of light for a given metal, then the work function ϕ becomes;

**Download from www.arjun00.com.np

$$\phi = hf_0$$

Thus, the equation (i) can be written as,

$$\frac{1}{2}mv^2 = h(f - f_0) \qquad \cdots\cdots (iii)$$

If λ and λ_0 be the wavelength of incident, photon and wavelength corresponding to the threshold frequency respectively, then,

$$f = \frac{c}{\lambda} \text{ and, } f_0 = \frac{c}{\lambda_0}$$

where, 'c' is the velocity of light in vacuum.

Hence,

$$\frac{1}{2}mv^2 = hc\left(\frac{1}{\lambda} - \frac{1}{\lambda_0}\right)$$

This is another form of Einstein's photoelectric equation.

6. State Bohr's postulates and hence derive expression for energy of electron in n^{th} orbit of hydrogen atom.

➢ **See the Solution of 2077 R/B of Q.no 4 on Page no. 9**

Group 'B'

**Download from www.arjun00.com.np

7. Derive an expression for energy stored in a capacitor.

- Let a capacitor of capacitance 'C', is charged to a potential difference 'V' with initial charge 'Q'. The amount of work done to move charge dQ on capacitor at potential difference of 'V' is given by;

$$dW = V\,dQ \qquad \cdots\cdots (i)$$

But, Potential difference $(V) = \frac{Q}{C}$

Substituting the value of 'V' in equation (i); we get,

$$dW = \frac{Q}{C}\,dQ$$

www.arjun00.com.np

Let'a capacitor is charged from initially zero to charge 'q'. The total amount of work done is given by integrating the relation,

i.e., $$W = \int_0^q dw = \int_0^q \frac{Q}{C}\,dQ = \frac{1}{C}\int_0^q Q\,dQ$$

$$\therefore \quad W = \frac{1}{C}\left[\frac{Q^2}{2}\right]_0^q = \frac{1}{2C}q^2$$

Now, substituting 'Q' for 'q' ; we get,

$$W = \frac{1}{2C}q^2$$

Since, $Q = CV$

$$\therefore W = \frac{1}{2}CV^2$$

The amount of works done is stored as energy on the charged capacitor. **Hence,**

Energy stored on charged capacitor $(\mathbf{E}) = \frac{1}{2}\mathbf{CV^2}$

**Download from www.arjun00.com.np

8. What is galvanometer? How is a galvanometer converted Ammeter?

- A **galvanometer** is an electric instrument used to detect feeble currents in electric circuits. It is also used to detect the direction of currents in circuits.

- **2nd Part See the Solution of 2077 R/B of Q.no 7 on Page no. 16**

www.arjun00.com.np

9. State and explain Lenz's law.

- It states that **"the direction of induced current is always such that it opposes the change or cause which produces it"**. It is used to find out the direction of current due to induced emf.

  Note that Lenz's law is reflected mathematically in the minus sign on the R.H.S. of Faraday's second law i.e. $\varepsilon = \frac{d\phi}{dt}$. Here minus sign shows opposing nature of induced e.m.f.

  To understand it, consider a closed coil placed near a bar magnet north pole pointing towards it. As the magnet is moved towards the coil, flux linked with the coil change, so that e.m.f. is induced and an induced current flows in the coil. This current produced in the coil opposes the moving magnet as shown in Fig (a). But as the magnet is moved away from the coil, the induced e.m.f. again produces current but in opposite direction as before. So, the magnet will be attracted by the magnetic field due to induced current.

**Download from www.arjun00.com.np

Hence this shows that current due to induced e.m.f. produces magnetic field such that it opposes the motion of the magnet which is the cause producing the current.

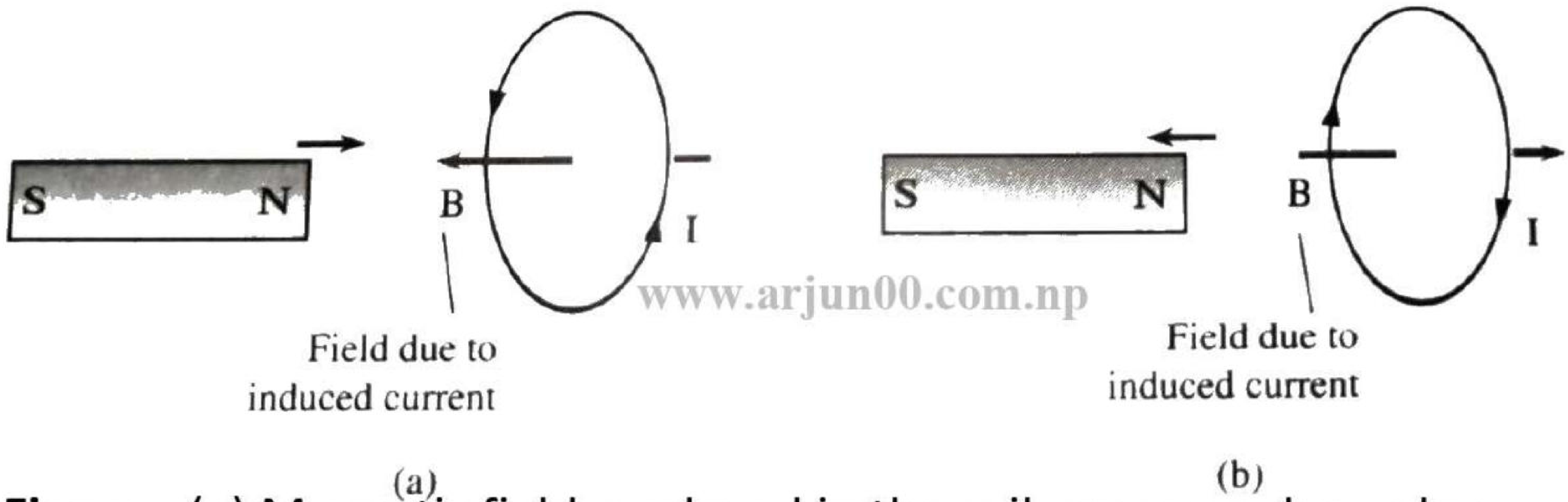

Figure:- (a) Magnetic field produced in the coil opposes when a bar magnet is moved toward the coil.

(b) Magnetic field produced in the coil attracts when a bar magnet is moved away from the coil.

10. Explain the use of PN diodes as Half wave rectifier.

- When a single diode is used as a rectifier the rectification is half of A.C. wave only. The simple circuit diagram with a diode as a half wave rectifier is given in the figure.

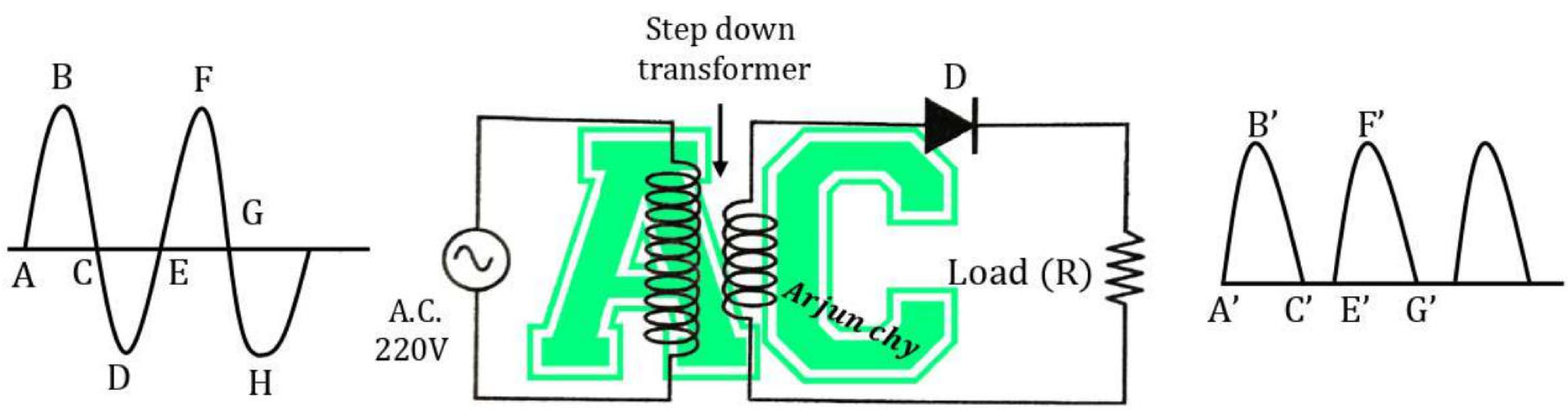

**Download from www.arjun00.com.np

The alternating current from main supply is fed to the primary of a step-down transformer. Thus, it drops the potential difference from higher to lower required potential difference. Low potential difference from transformer is applied to the diode.

Let the variations of A.C. is applied to the diode. The variation of A.C. potential difference is as shown above. During the half of the cycle ABC the diode allows the plate current to pass through it gives the output wave A'B'C' as the next wave form CDE approaches he diode it suppresses the wave gives no output plate current. Again, in next waveform EFG the diode operates and gives output E'F'G'. This rectifier suppresses half wave and gives single sided waveform.

Thus the rectifier is said to be half wave rectifier.

www.arjun00.com.np

11. Write Newton's formula for velocity of sound in air. What correction was applied by Laplace and why?

- Newton's Formula for Velocity of sound in Air $= \sqrt{\frac{E}{\rho}} = \sqrt{\frac{P}{\rho}}$

Velocity of sound in Air $= \sqrt{\frac{P}{\rho}}$

For air at N.T.P.; we have,

$P = 1.013 \times 10^5\ Nm^{-2}$ and, $\rho = 1.293\ kgm^{-3}$

$$\therefore\ v = \sqrt{\frac{P}{\rho}} = \sqrt{\frac{1.013\times10^5}{1.293}} = 280\ ms^{-1}$$

However, the velocity of sound in air at NTP is found experimentally as 332 m/s which is quite greater than the value calculated above.

**Download from www.arjun00.com.np

Such difference in values shows that there are discrepancies in Newton's assumption and it needs correction.

Laplace's correction

Laplace suggested that the change in pressure and volume of a gas due to the passage of sound wave is not isothermal as assumed by Newton but it is adiabatic. Therefore, appropriate modulus of elasticity is the **adiabatic bulk modulus**, $i.e.$, $\mathrm{E} = \mathrm{B_{adi}}$. Thus, velocity of sound in a gas is given by,

$$\mathrm{v} = \sqrt{\frac{\mathrm{B_{adi}}}{\rho}} \qquad \cdots\cdots (i)$$

Adiabatic equation of state is given by,

$$\mathrm{PV^{\gamma}} = \mathrm{Constant} \qquad \cdots\cdots (ii)$$

Where, γ is ratio of the specific heat at constant pressure to the constant volume $i.e.$, $\gamma = \frac{\mathrm{C_P}}{\mathrm{C_V}}$.

www.arjun00.com.np

Differentiating equation (ii); we get,

$$\gamma.\mathrm{p}.V^{\gamma-1}.\mathrm{dV} + \mathrm{V^{\gamma}dp} = 0$$

$$\gamma.\mathrm{p}.V^{\gamma-1}.\mathrm{dV} = -\mathrm{V^{\gamma}dp}$$

$$\Rightarrow \gamma.\mathrm{p} = \frac{-\mathrm{V^{\gamma}dp}}{V^{\gamma-1}.\mathrm{dV}} = \frac{-V.dp}{dv} = bulk\ modulus(B_{adi})$$

$$or, \quad \gamma.P = \mathrm{B_{adi}} \qquad \cdots\cdots (iii)$$

From equation (i) and (iii); we have,

$$\mathrm{v} = \sqrt{\frac{\gamma.P}{\rho}} \qquad \cdots\cdots (iv)$$

**Download from www.arjun00.com.np

$$v = \sqrt{\frac{\gamma . P}{\rho}} \qquad \cdots\cdots (iv)$$

The Value of γ depends upon the nature of gas.

For air;

$$\gamma = 1.40$$

$$\therefore \text{ Velocity of sound in air at N.T.P(v)} = \sqrt{\frac{\gamma . P}{\rho}} = \sqrt{\frac{1.4 \times 1.013 \times 10^5}{1.293}}$$

$$= \mathbf{332\ ms^{-1}}$$

This value agrees with experimental value.

12. State and prove Brewster's law.

- The tangent of the polarising angle is equal to the refractive index of the refracting medium at which partial reflection takes place.

According to Brewster's law, $\tan i_P = \mu$.

i. Let XY be the interface of refracting media

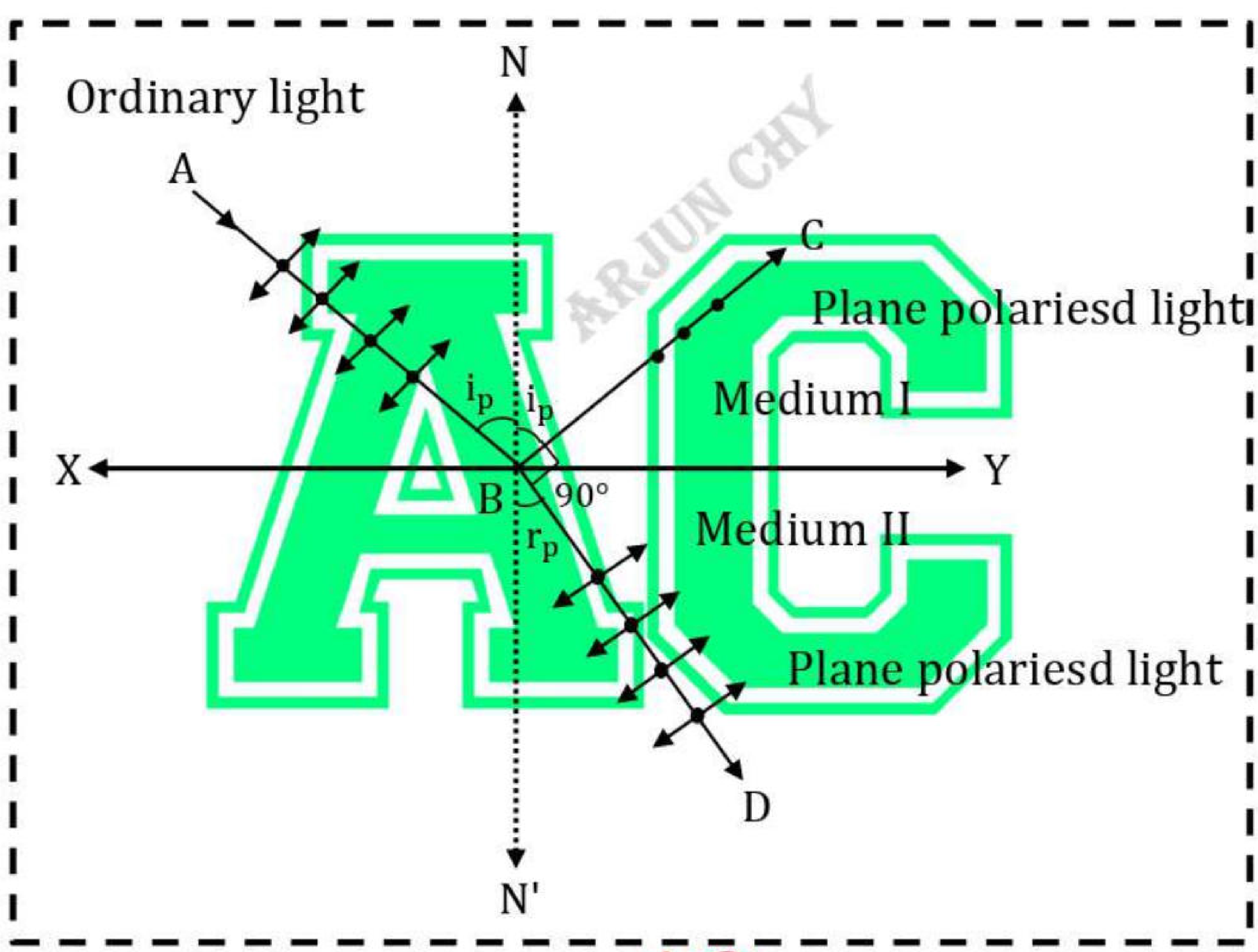

**Download from www.arjun00.com.np

AB: incident ordinary light
BD: partially polarised or unpolarised light
BC: reflected plane polarised light
$\angle$ **ABN**: incident unpolarised angle
$\angle$ **NBC**: reflected polarised angle
$\angle$ **ABN**: incident polarising angle

ii. From laws of reflection,

$\angle ABN = \angle NBC = i_p$

Also, $\angle CBD = 90°$

iii. From figure,

$i_p + 90° + r_p = 180°$

$\therefore \quad r_p = 90° - i_p \qquad \cdots (i)$

iv. From Snell's law,

$$\mu = \frac{\sin i_p}{\sin r_p}$$

www.arjun00.com.np

$$\mu = \frac{\sin i_p}{\sin(90° - i_p)} \qquad [\because \text{ From equation } (i)]$$

$$\mu = \frac{\sin i_p}{\cos i_p}$$

$$\therefore \boldsymbol{\mu = \tan i_p}$$

Hence, Proved.

**Download from www.arjun00.com.np

Group 'C'

13. Three charges of 3×10^{-9}c, -3×10^{-9}c and 1.5×10^{-9}c are placed in air at the corners A, B and C of an equilateral triangle ABC having side 5cm. Find the force acting on the charge 1.5×10^{-9}c.

➢ **Solution**

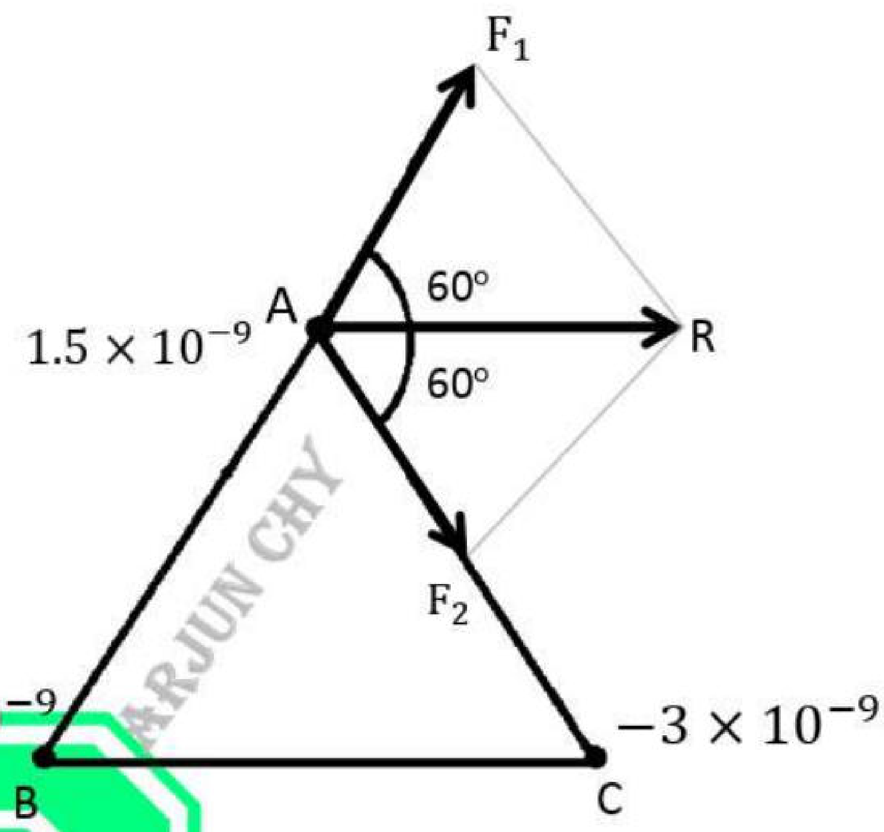

F_1 is repulsive force between 3×10^{-9} & 1.5×10^{-9} ,

F_2 is attractive force between 1.5×10^{-9} & 3×10^{-9}

$$F = \frac{1}{4\pi\varepsilon 0}\frac{q_1 q_2}{r^2}$$

$\left(\frac{1}{4\pi\varepsilon 0}\right) = 9 \times 10^9 Nm^2C^{-2}$, is Coulomb's Constant.

The coulomb F_1 Force between 3×10^{-9} & 1.5×10^{-9} and Coulomb force F_2 between 1.5×10^{-9} & 3×10^{-9}. Is same because product of charges is same and distance between charges is also same.

Hence, Resultant force $R = 2|F| cos\ 60°$

$$= 2 \times 9 \times 10^9 \times \frac{3 \times 10^{-9} \times 1.5 \times 10^{-9}}{(5 \times 10^{-2})^2} \times cos\ 60°$$

$$= 2 \times 9 \times 10^9 \times \frac{3 \times 10^{-9} \times 1.5 \times 10^{-9}}{25 \times 10^{-4}} \times \frac{1}{2}$$

$$= 1.62 \times 10^{-9+4}$$

$$= \mathbf{1.62 \times 10^5\ N}$$

**Download from www.arjun00.com.np

14. A metallic wire has a diameter of 4.12mm. When the current in the wire in 8.0A, the drift velocity of electron is $5.40 \times 10^{-5} m/s$. What is the density of free electrons in the metal?

➢ **Solution**

Given;

$$\text{Diameter} = 4.12 \text{ mm}$$

$$\text{radius(r)} = \frac{4.12}{2} = 2.06 \text{ mm} = 0.00206 \text{ m}$$

Let A be the cross section of wire.

$$A = \pi r^2$$
$$= \pi(0.00206)^2$$

$$\text{Current (I)} = 8.0 \text{ A}$$

Drift velocity of electron $(v_d) = 5.40 \times 10^{-5} \text{m/s}$

We have,

www.arjun00.com.np

If n is electron density in wire, then

$$I = v_d enA$$

$$n = \frac{I}{v_d eA}$$

$$= \frac{8}{5.40 \times 10^{-5} \times 1.6 \times 10^{-19} \times \pi(0.00206)^2}$$

$$= \mathbf{69453.14 \times 10^{24}} \ \boldsymbol{electrons\ per\ m^3}$$

**Download from www.arjun00.com.np

15. A 40Ω resistance, 3mH inductor and 2μf capacitor are connected in series to a 110V, 50Hz a.c. source. Calculate the value of current in the circuit.

➢ Solution

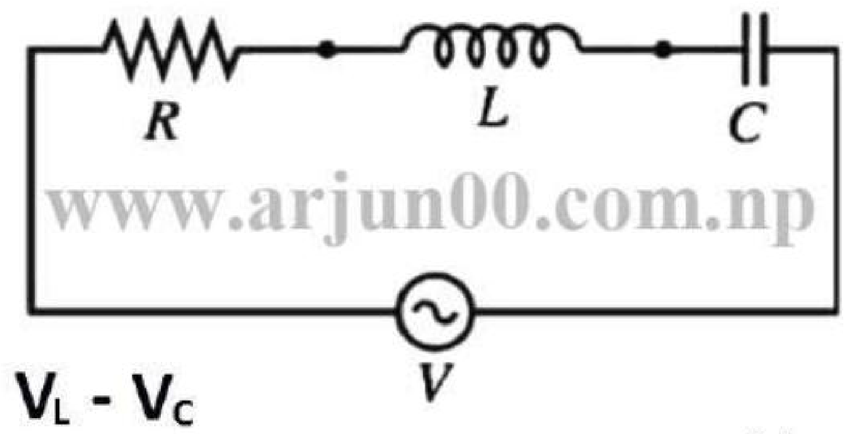

www.arjun00.com.np

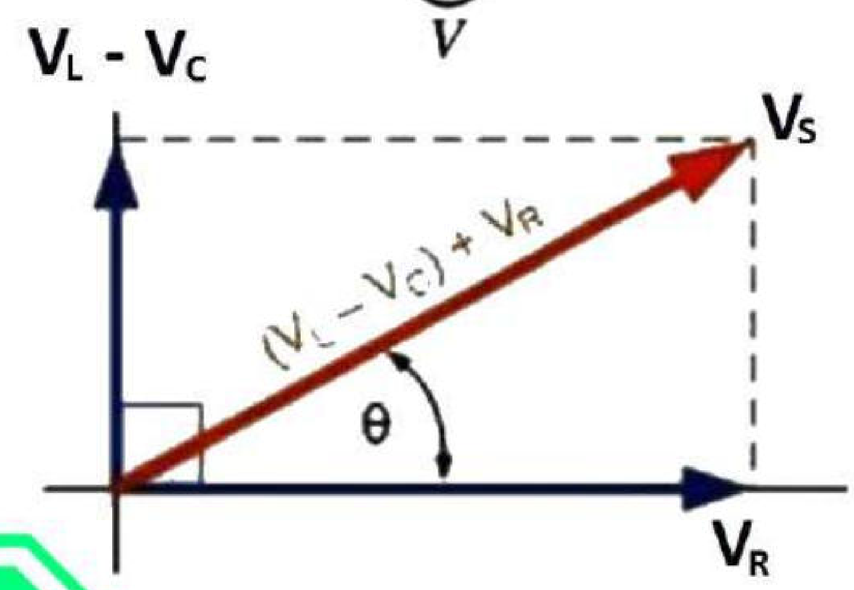

We have,

$$V = IZ$$

Where Z is an impedance of circuit

$$Z = \sqrt{R^2 + (X_L - X_C)^2}$$

$$\therefore V = I\sqrt{R^2 + (X_L - X_C)^2}$$

$$I = \frac{V}{\sqrt{R^2 + (X_L - X_C)^2}}$$

Given,

Inductance (L) = 3mH = 3×10^{-3}H
Capacitance (C) = $2\mu F = 2 \times 10^{-6}$C
Frequency (f) = 50 Hz
Voltage (V) = 110 V
Resistance (R) = 40Ω

$$\boldsymbol{X_L = \omega L}$$
$$= 2\pi f L$$
$$= 2\pi \times 50 \times 3 \times 10^{-3}$$
$$= \mathbf{0.314}$$

$$\boldsymbol{X_c = \frac{1}{\omega C}}$$
$$= \frac{1}{2\pi f C}$$
$$= \frac{1}{2\pi \times 50 \times 2 \times 10^{-6}}$$
$$= \mathbf{1591.54}$$

**Download from www.arjun00.com.np

$$Z = \sqrt{R^2 + (X_L - X_C)^2}$$
$$= \sqrt{40^2 + (0.314 - 1591.54)^2}$$
$$= \sqrt{1600 + 2532000.183076}$$

$$\mathbf{Z = 1591.72\ \Omega}$$

$$I = \frac{110}{1591.72}$$
$$\therefore \boldsymbol{I} = \mathbf{0.069\ A}$$

16. Find the force and energy density when 2m long and 3mm thick wire is extended by 1.4mm (Young's modulus of wire is 2×10^{11} N m^{-2}).

➢ **Solution**

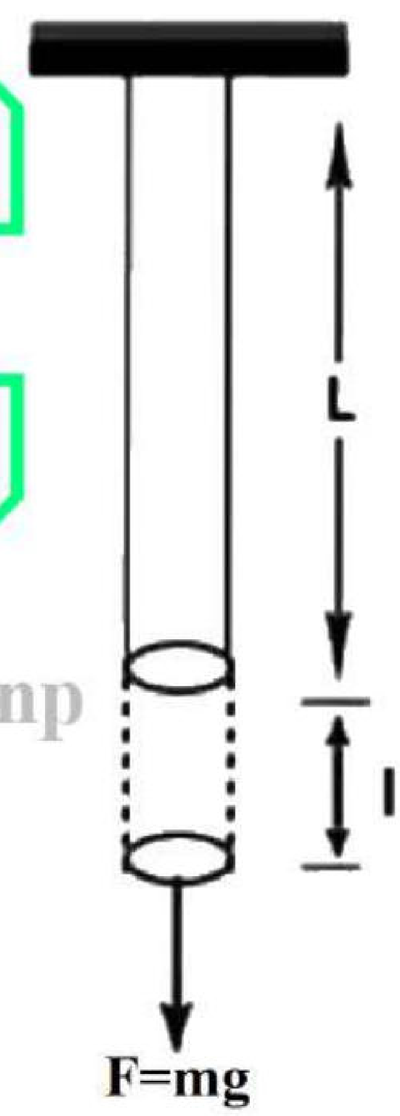

Given,

Length $(L) = 2m$

$Diameter\ (D) = 3mm = 0.003m$

$radius\ (r) = \frac{D}{2} = 0.\frac{003}{2} = 0.0015m$

If A is the cross sectional area then,

$A = \pi r^2$

$= \pi(0.0015)^2$

Extension $(e)\ =\ 1.4\ mm\ = 0.0014m$

Young's modulus (Y) $= 2 \times 10^{11}\text{Nm}^{-2}$

We have,

$$Y = \frac{FL}{Ae}$$

$$F = \frac{Y\,Ae}{L}$$

$$= \frac{2 \times 10^{11}\pi(0.0015)^2 \times 0.0014}{2}$$

www.arjun00.com.np

**Download from www.arjun00.com.np

$$= \frac{1979.2033}{2}$$
$$= 989.60\ N$$

Now,

$$\boldsymbol{Stress} = \frac{\boldsymbol{F}}{\boldsymbol{A}}$$
$$= \frac{989.60}{\pi(0.0015)^2}$$
$$= 1.4 \times 10^8 N/m^2$$

,

$$\boldsymbol{Strain} = \frac{\boldsymbol{e}}{\boldsymbol{L}}$$
$$= \frac{0.0014}{2}$$
$$= 0.0007$$

Energy Density

$$\mathrm{U} = \frac{1}{2} \times \text{stress} \times \text{strain}$$
$$= \frac{1}{2} \times 1.4 \times 10^8 \times 0.0007$$
$$= \mathbf{49000\ J}$$

17. Find the temperature at which velocity of sound is double to the velocity of sound at N.T.P.

➢ **Solution**

At NTP, $\mathrm{T_1} = 273$ K. Let $\mathrm{T_2}$ be the temperature at which velocity of sound is double of $\mathrm{T_1}$

$$\frac{\mathrm{V_2}}{\mathrm{V_1}} = \sqrt{\frac{\mathrm{T_2}}{\mathrm{T_1}}}$$

$$\frac{2\mathrm{V_1}}{\mathrm{V_1}} = \sqrt{\frac{\mathrm{T_2}}{273}}$$

$$\Rightarrow (2)^2 = \frac{\mathrm{T_2}}{273}$$

$$\mathrm{T_2} = 4 \times 273 = 1092\mathrm{K}$$

www.arjun00.com.np

Hence, temperature at which velocity is double to the velocity at NTP is $\mathbf{T_2 = 1092\ K}$

**Download from www.arjun00.com.np

18. A capillary tube of 0.3cm diameter is placed vertically inside a liquid of density $800\ \mathrm{kg/m^3}$, surface tension $5 \times 10^{-4}\ \mathrm{N/m}$ and angle of contact $30°$. Calculate to which the liquid rises in the capillary tube.

➢ **Solution**

Given;

$$\text{Diameter} = 0.3cm = 0.003\ m$$

$$radius = \frac{0.003}{2} = 0.0015\ m$$

www.arjun00.com.np

$$\text{Density } (\rho) = 800\ kg/m^3$$

$$\text{Surface Tension } (T) = 5 \times 10^{-4}\text{N/m}$$

$$\text{Angle of contact } (\theta) = 30°$$

We have,

$$h = \frac{2T cos\theta}{r\rho g}$$

$$h = \frac{2 \times 5 \times 10^{-4} \times cos\ 30°}{0.0015 \times 800 \times 10}$$

$$h = \frac{2 \times 5 \times 10^{-4} \times \frac{\sqrt{3}}{2}}{12}$$

$$= \mathbf{7.2168 \times 10^{-5}m}$$

Hence, the Level Rise in capillary tube is 7.2168×10^{-5}m

**Download from www.arjun00.com.np

19. Light of wave length 6000Å falls on a photosensitive plate of work function 1.9 eV. Find i) Kinetic energy of the photo electron emitted and ii) Stopping potential. ($h = 6.62 \times 10^{-34} Js$)

➢ **Solution**

Given,

$$\lambda = 6000\ \text{Å} = 6000 \times 10^{-10}\text{m}$$

$$\phi = 1.9\ \text{eV}$$

Energy of the incident photon,

$$E = hf = \frac{hc}{\lambda}$$

$$= \frac{6.62 \times 10^{-34} \times 3 \times 10^{8}}{6000 \times 10^{-10}}$$

$$= 3.31 \times 10^{-19}\text{J}$$

$$= \frac{3.31 \times 10^{-19}}{1.6 \times 10^{-19}}\text{eV}$$

$$= 2.07\ \text{eV}$$

K. E. of photoelectrons emitted, $\text{K.E.} = hf - \phi$

$$= E - \phi$$

$$= 2.07 - 1.9\ \text{eV}$$

$$= 0.17\ \text{eV}$$

www.arjun00.com.np

Let V_0 be the stopping potential, then

K. E. of photoelectron $= eV_0$

$$\therefore V_0 = \frac{\text{K.E.}}{e} = \frac{0.17\ \text{eV}}{e} = \mathbf{0.17V}$$

**Download from www.arjun00.com.np

20. The half-life of $92^{U^{238}}$ is 4.5×10^9 years. Calculate the activity of 1 gm sample of $92^{U^{238}}$.

➢ **Solution**

Given;

$$T_{1/2} = 4.5 \times 10^9 \; years$$

If λ is decay constant,

$$\lambda = \frac{0.693}{T_{1/2}}$$

www.arjun00.com.np

$$= \frac{0.693}{4.5 \times 10^9}$$

$$= 15.4 \times 10^{-11} \; per \; year$$

Now,

238 gm (1 mole)of $92^{U^{238}}$ contain 6.023×10^{23} no. of atoms

1 gm (1 mole) of $92^{U^{238}}$ contain $\frac{6.023 \times 10^{23}}{238}$ no. of atoms

1 gm (1 mole)of $92^{U^{238}}$ contain $\mathbf{2.53 \times 10^{21}}$ **no. of atoms**

$\boldsymbol{i.e}$ $\mathbf{N = 2.53 \times 10^{21}}$

Now,

$$Activity\left(\frac{dA}{dt}\right) = N\lambda$$

$$\frac{dA}{dt} = 2.53 \times 10^{21} \times 15.4 \times 10^{-11}$$

$$\boldsymbol{\frac{dA}{dt} = 38.962 \times 10^{10} \; atoms/year}$$

-The End-

**Download from www.arjun00.com.np

Engg. Physics –II__(Engg. All) 2nd Sem

(2079 New) Question Paper Solution.

Compile & Written by © Arjun Chy

Website :- www.arjun00.com.np

Facebook :-www.facebook.com/Arjun00.com.np

1. Define electric potential. Derive an expression for electric potential at a point with necessary diagram.

- The electric potential at a point inside the electric field is defined as the amount of work done in moving a unit positive charge (test charge) from infinity to that point.

Expression for potential at a point

- Consider a positive charge +q placed at a point 'O' in vacuum as shown in the figure and another point 'A' at a distance 'r' from 'O'. Then, according to the definition, potential V_a at a point 'A' is equal to the amount of work done $W_{\infty a}$ in bringing a unit positive charge form infinity to point 'A'.

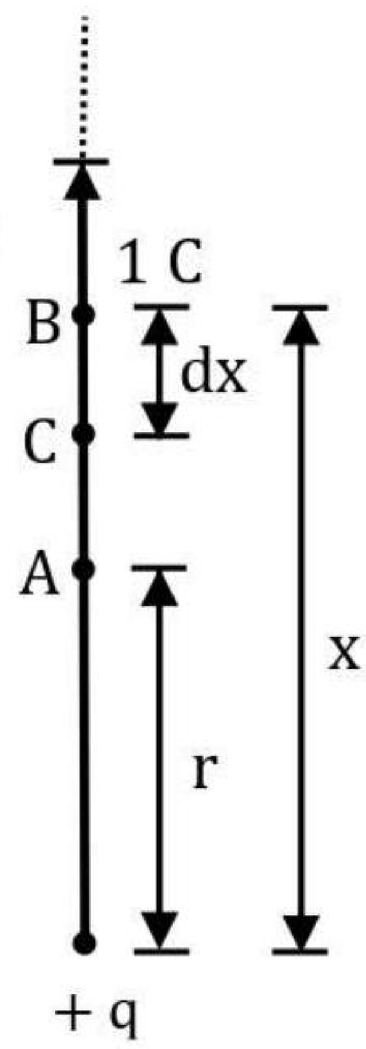

$$\therefore \quad V_a = W_{\infty a}$$

website:- www.arjun00.com.np

$$F = \frac{q}{4\pi\varepsilon_0 x^2}$$

Let, from point 'B', the unit positive charge is moved to point 'C' by an infinitesimal small distance dx. Then, amount of work done in moving the unit positive charge by distance dx against the force 'F' is given by;

**Download from www.arjun00.com.np

$$dW = -F\,dx = -\frac{q}{4\pi\varepsilon_0 x^2}dx$$

Where, negative sign shows that, unit positive charge is displaced against the electrostatic force acting on it.

Now, the total work done in bringing the unit positive charge from infinity to point 'A' is obtained as;

$$W_{\infty a} = \int_{\infty}^{A} dW = \int_{\infty}^{r}\left(\frac{-q}{4\pi\varepsilon_0 x^2}\right)dx$$

$$= \frac{q}{4\pi\varepsilon_0}\int_{\infty}^{r} x^{-2}dx = \frac{-q}{4\pi\varepsilon_0}\left[\frac{x^{-1}}{-1}\right]_{\infty}^{r} = \frac{q}{4\pi\varepsilon_0}\left[\frac{1}{x}\right]_{\infty}^{r} = \frac{q}{4\pi\varepsilon_0}\left(\frac{1}{r} - \frac{1}{\infty}\right)$$

$$\therefore W_{\infty a} = \frac{q}{4\pi\varepsilon_0 r}$$

Hence, electric potential at point 'A' $(V_a) = \frac{q}{4\pi\varepsilon_0 r}$

*Note for understanding only, not necessary to write in exam :

www.arjun00.com.np

It means that if a unit positive charge (*i.e.,* 1 C of charge) is taken from infinity to point 'A' at a distance 'r' from source charge +q, the unit positive charge will have potential energy of $V = \frac{q}{4\pi\varepsilon_0 r}$. The potential energy gained by the unit positive charge comes from the work done in moving the unit positive charge from infinity to that point.

In S. I. ; unit of potential is Joule/Coulomb or Volt.

**Download from www.arjun00.com.np

2. Define Surface Tension. Find an expression to calculate surface tension of a liquid by capillary rise method.

- The property of a liquid by virtue of which its free surface behaves like a stretched elastic membrane and tries to occupy the minimum possible area is called surface tension.

- Consider a glass capillary tube dipped in liquid, such as water whose angle of contact is less than 90°, the liquid rises in the tube as shown in figure.

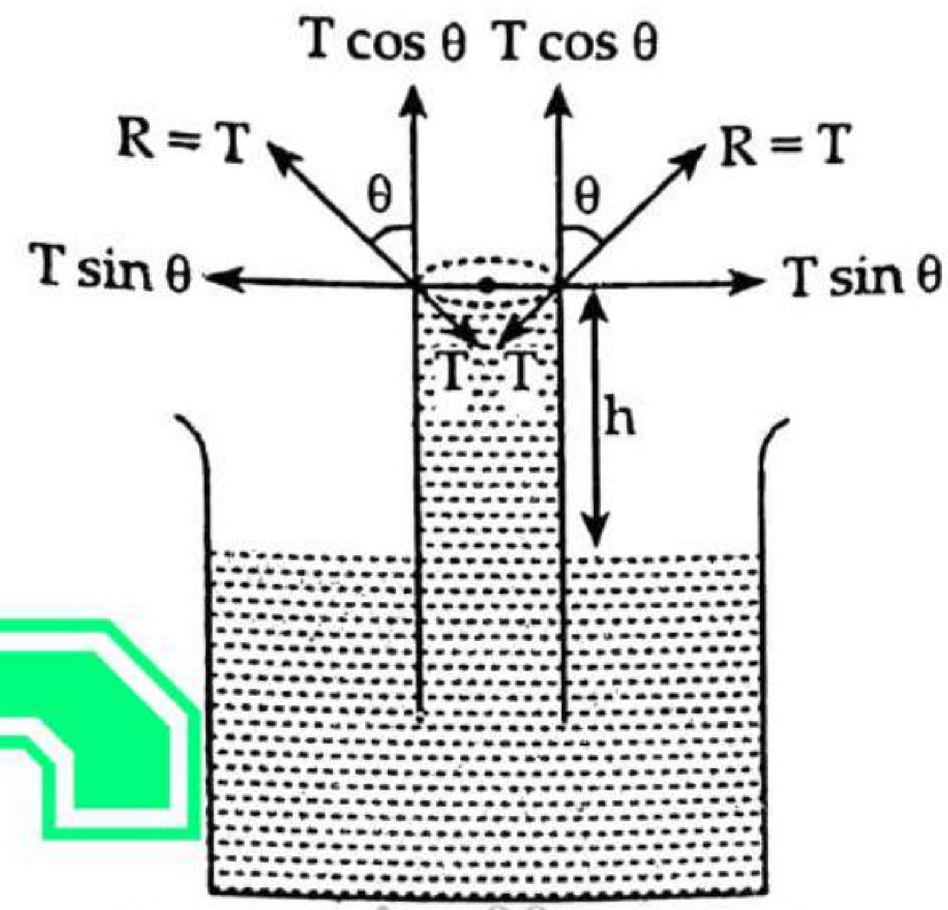

www.arjun00.com.np

Due to the surface tension, the liquid tries to contract. For these liquid molecules pulls the glass with force 'T' per unit length tangentially at a point of contact of the liquid surface and glass. The glass molecules also exert equal and opposite $R(= T)$, to the liquid along the circle of contact. This reaction force $R(= T)$ acting per unit length is resolved into two components.

T sin θ per unit length along horizontal direction

These components act radically outward along the circle of contact and cancel the effect of one another.

T cos θ per unit length along vertical direction

These components are responsible for rise of liquid in capillary tube. Since,

**Download from www.arjun00.com.np

Liquid molecules are mobile; they are dragged up by surface tension 'T'. The liquid rises in the tube until total surface tension becomes equal to the weight of the liquid column in the tube outside level of liquid.

Let 'r' be the radius of capillary tube, 'T' be the surface tension of liquid and θ be the angle of contact, then,

www.arjun00.com.np

Total upward force = Vertical component of T × Circumference of tube

$$= T\cos\theta \times 2\pi r$$

$$= 2\pi r T\cos\theta \cdots\cdots\cdots\cdots (1)$$

If 'h' be the height of liquid column in table and ρ be density of liquid, then,

Weight of liquid raised in tube = Volume × Density × Acceleration due to gravity

$$= V\rho g$$

$$= \pi r^2 h\,\rho g \cdots\cdots\cdots\cdots (2)$$

Here, weight of liquid in the meniscus is neglected for tube of small radius.

Now, **equating equation (1) and (2); we obtain**,

$$2\pi r T\cos\theta = \pi r^2 h\rho g$$

$$\therefore\ T = \frac{rh\rho g}{2\cos\theta}$$

This is the required expression for surface tension.

**Download from www.arjun00.com.np

3. Define interference of light. Describe Young's double slit experiment for the measurement of wavelengths of monochromatic source.

- **Interference of light** is the phenomenon of non-uniform distribution of light energy in a medium due to superposition of light waves from two coherent sources.

www.arjun00.com.np

There are two types of interference:- Constructive interference and destructive interference.

Measurement of the Wavelength of Light

Newton's ring can be used to measure the wavelength of a monochromatic source of light. An experimental arrangement for the determination of wavelength of sodium light is shown in Figure. S is a source of sodium light. A parallel beam of light from the lens L_1 is reflected by the glass plate G inclined at an angle of $45°$ to the horizontal. L is a plano-convex lens of large focal length. Newton's strings are viewed through the eyepiece of the travelling microscope M focused on the air film. Circular bright and dark rings are seen with the dark central fringe. With the help of the travelling microscope, measure the diameter of the nth dark ring.

**Download from www.arjun00.com.np

Let D_n be the diameter of the nth ring and $r_n^2 = n\lambda R$

But $r_n = \frac{D_n}{2}$,

$$\frac{{D_n}^2}{2} = n\lambda R$$

$$or,\ {D_n}^2 = 4n\lambda R \quad \cdots\cdots (i)$$

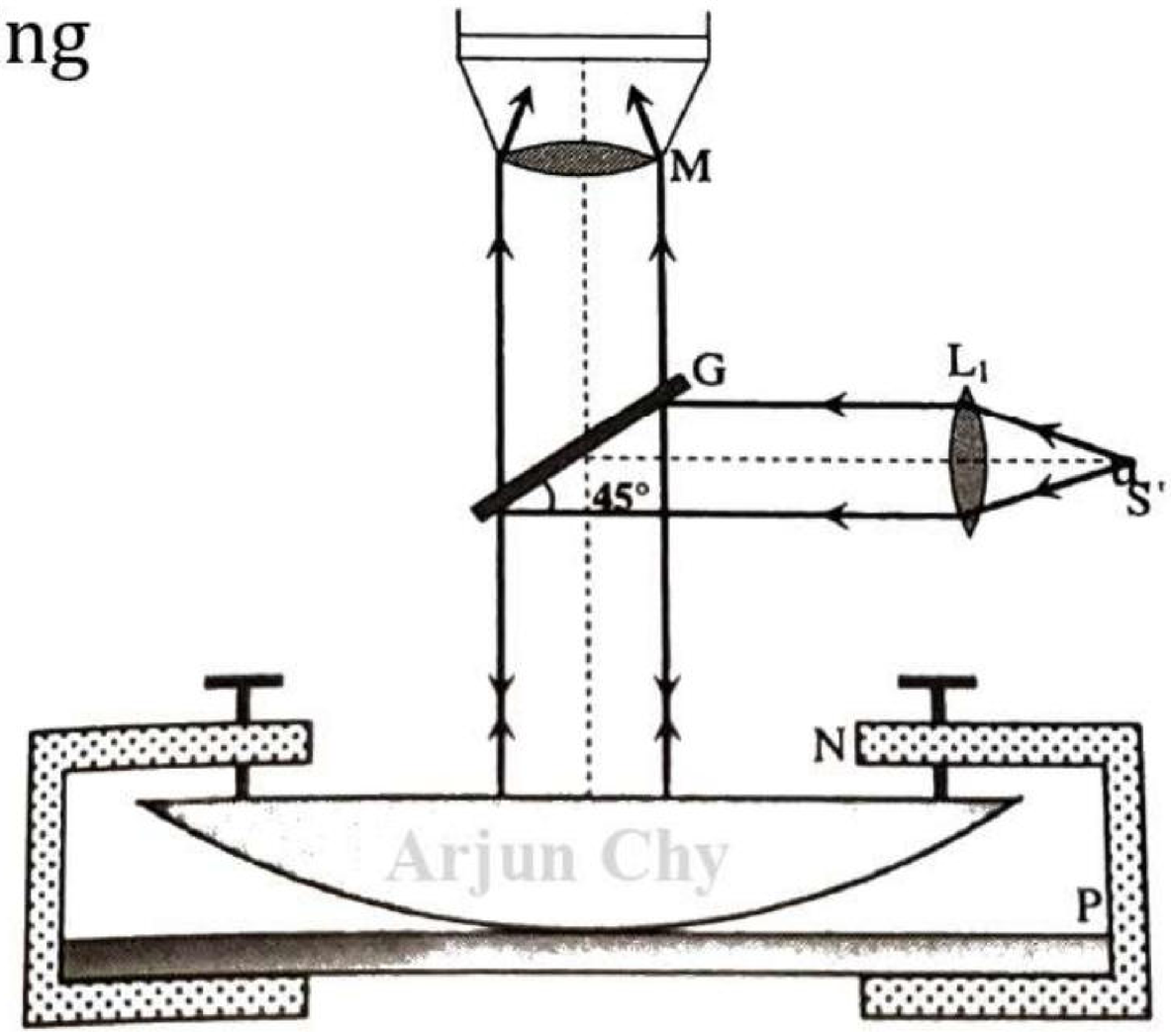

Fig :- Arrangement for measurement of wavelength of light.

The diameter of the $(n+m)^{th}$ dark ring is Measured. Let it be D_{n+m}

$$\therefore\ {D^2}_{n+m} = 4(n+m)\lambda R \quad \cdots\cdots (ii)$$

Subtracting (i) form (ii), We get

$$(D_{n+m})^2 - (D_n)^2 = 4m\lambda R$$

$$or, \lambda = \frac{(D_{n+m})^2 - (D_n)^2}{4\,mR} \quad \cdots\cdots (iii)$$

Hence, the wavelength λ of the sodium light can be measured.

**Download from www.arjun00.com.np

4. Using Bohr's theory of Hydrogen atom, find the total energy of an electron in n^{th} orbit.

➢ See the Solution of 2077 R/B of Q.no 4 on Page no. 9

5. What is impedance? Derive an expression of impedance for LCR circuit.

➢ The total opposition to alternating current by an electric circuit is called impedance. It is expressed in ohms and represented by letter 'Z'. It is equal to the square root of the sum of the squares of the resistance and reactance of the circuit.

Consider an a.c. circuit containing an inductor 'L', a resistor 'R', and a capacitor 'C'.

The voltage across 'R', V_R is in phase with the current. The voltage across 'L', leads the current by $90°$ .The voltage across 'C', V_C lags behind the current by $90°$, where,

$$V_R = IR$$

$$V_L = IX_L$$

and $V_C = IX_C$

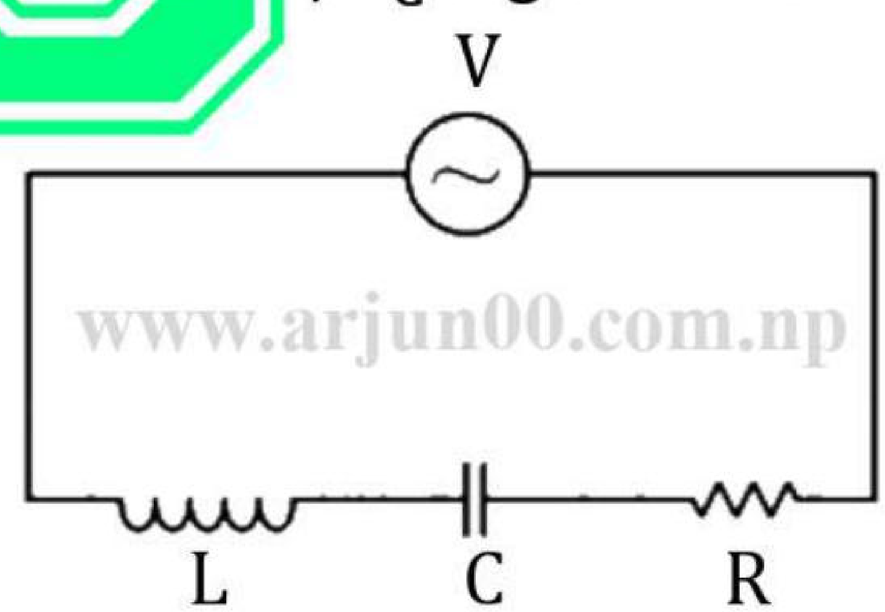

www.arjun00.com.np

V_L and V_C are out of phase. Let us consider the circuit in which $X_L > X_C$, then$V_L > V_C$; resulting voltage between $V_L$and $V_C = V_L - V_C$ in the direction V_L. So, the applied voltage 'V' is given by,

$$V^2 = V_R^2 + (V_L - V_C)^2 = (IR)^2 + (IX_L - IX_C)^2$$

$$or,\ I^2 = \frac{V^2}{R^2+(X_L-X_C)^2}$$

**Download from www.arjun00.com.np

or, $I = \frac{V}{\sqrt{R^2+(X_L-X_C)^2}}$

From above relation; we get, for 'L','C' and 'R' circuit.

$$\text{Impedance}(Z) = \sqrt{R^2 + (X_L - X_C)^2}$$

6. Discuss the theory of Millikan's oil drop experiment to determine charge of an electron.

- The Millikan's experiment consists of a double walled chamber having three windows W_1, W_2 and W_3.The window W_1 is used to pass light, the window W_2 is used to pass x-rays for the ionization of inner gas and the window W_3, contains a travelling microscope. There are two metallic plates 'A' and 'B' each of diameter 22 cm and 3.5 cm. The upper plate 'A' has a central hole and is connected to the earth. Clock oil can be sprayed into the hole of the upper plate with the help of atomizer. Water is circulated between the walls to keep the temperature of the chamber constant as shown in the figure.

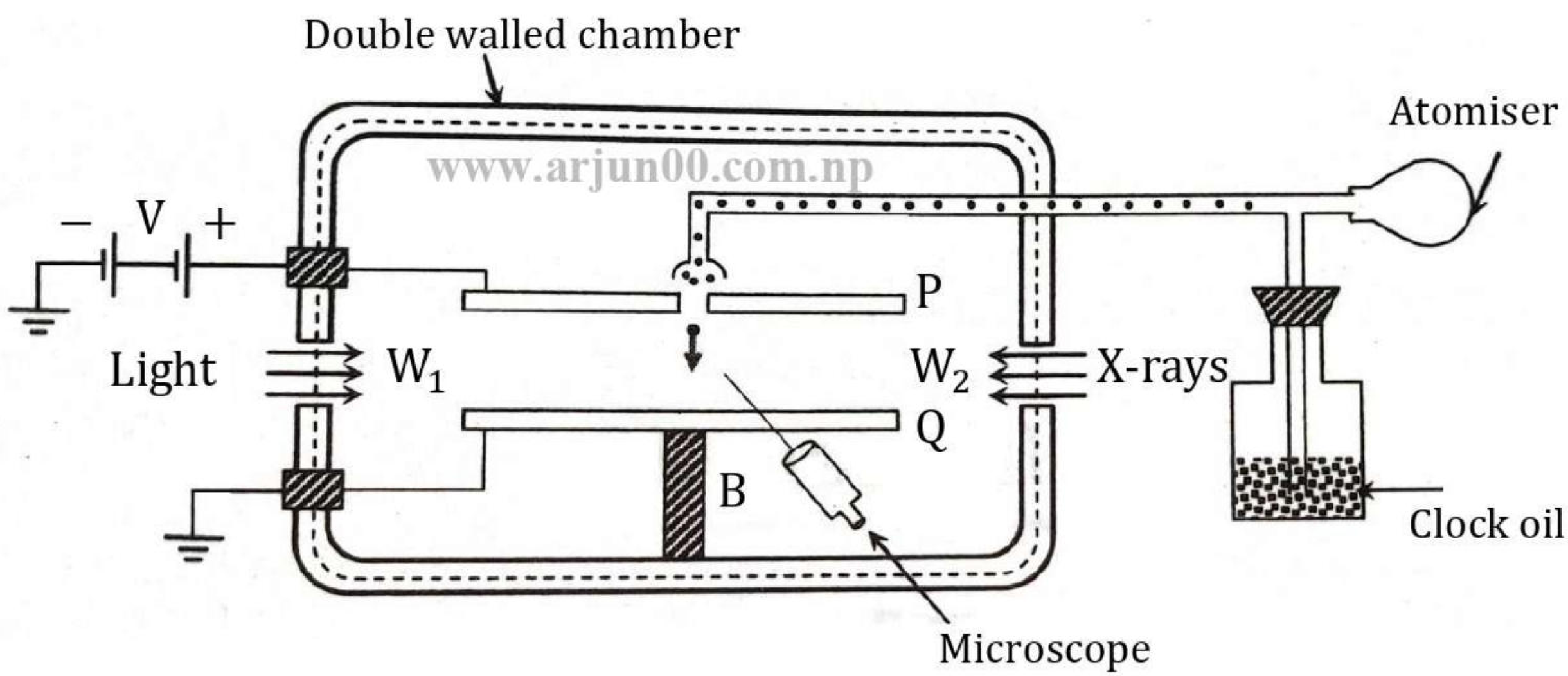

Fig:- Millikan's oil drop experiment

**Download from www.arjun00.com.np

Theory

- The electric field is first switched off, the clock oil drops fall under the effect of gravity alone.

  Suppose,

  Radius of oil drop = r
  Density of oil drop = ρ
  Density of air = σ

Therefore,

Volume of oil drop $(V) = \frac{4}{3}\pi r^3$

Mass of oil drop $(m) = V\rho = \frac{4}{3}\pi r^3 \rho$

Weight of the oil drop $(W) = mg = \frac{4}{3}\pi r^3 \rho g$

Similarly,

Upthrust experienced by oil drop = Weight of gas displaced

$$i.e.,\ V = \frac{4}{3}\pi r^3 \sigma g \quad \cdots\cdots\cdots\cdots\cdots\cdots (i)$$

So, Resultant downward driving force = $W - V$

$$= \frac{4}{3}\pi r^3(\rho - \sigma)g \cdots\cdots\cdots\cdots (ii)$$

When the drop of oil moves downwards, upward viscous force arises. When the viscous force becomes equal to the downward driving force, the drop starts to move with constant velocity called terminal velocity.

www.arjun00.com.np

If η be the coefficient of viscosity of air, then using stokes law, the upward viscous force experienced by the oil drop is;

$$\text{Viscous force } (F) = 6\pi\eta r v_1 \quad \cdots\cdots\cdots\cdots\cdots\cdots\cdots (iii)$$

**Download from www.arjun00.com.np

Where, v_1 is the terminal velocity of the falling oil drops.

When the oil drop is moving with terminal velocity v_1, then;

$$W - V = F$$

or, $\frac{4}{3}\pi r^3(\rho - \sigma)g = 6\pi\eta r v_1 \quad \cdots\cdots\cdots\cdots\cdots\cdots\cdots\cdots (iv)$

$$\therefore \quad r = \sqrt{\frac{9\eta v_1}{2g(\rho - \sigma)}} \quad \cdots\cdots\cdots\cdots\cdots\cdots\cdots\cdots (v)$$

www.arjun00.com.np

This relation gives the radius of the falling oil drop.

When the electric field is switched on, the oil drop moves with a smaller terminal velocity v_2 downwards. If 'E' be the strength of electric field and n be the number of electrons on a drop, then charge on drop 'q' is ne and electrostatic force an oil drop is;

$$F' = qE$$

The oil drop is moving downwards with smaller terminal velocity v_2, then,

$$W - U = F + F'$$

or, $\frac{4}{3}\pi r^3(\rho - \sigma)g = 6\pi\eta r v_2 + qE$

or, $6\pi\eta r v_1 = 6\pi\eta r v_2 + qE \qquad$ [From equation(iv)]

or, $6\pi\eta r(v_1 - v_2) = qE$

or, $q = \frac{6\pi\eta \mathbf{r}}{E}(v_1 - v_2)$

**Download from www.arjun00.com.np

$$\text{i.e.,}\quad q = \frac{6\pi\eta}{E}\sqrt{\frac{9\eta v_1}{2g(\rho-\sigma)}}(v_1 - v_2) \quad \cdots\cdots\cdots\cdots\cdots\cdots\cdots\cdots (vi)$$

The value of electronic charge from Millikan oil drop method was found to be $\approx 1.6 \times 10^{-19}$C.

Group'B'

7. Derive an expression for energy stored in a capacitor.

➢ **See the Solution of 2078 R/B of Q.no 7 on Page no. 44**

8. Explain the working of half wave rectifier.

➢ When a single diode is used as a rectifier the rectification is half of A.C. wave only. The simple circuit diagram with a diode as a half wave rectifier is given in the figure.

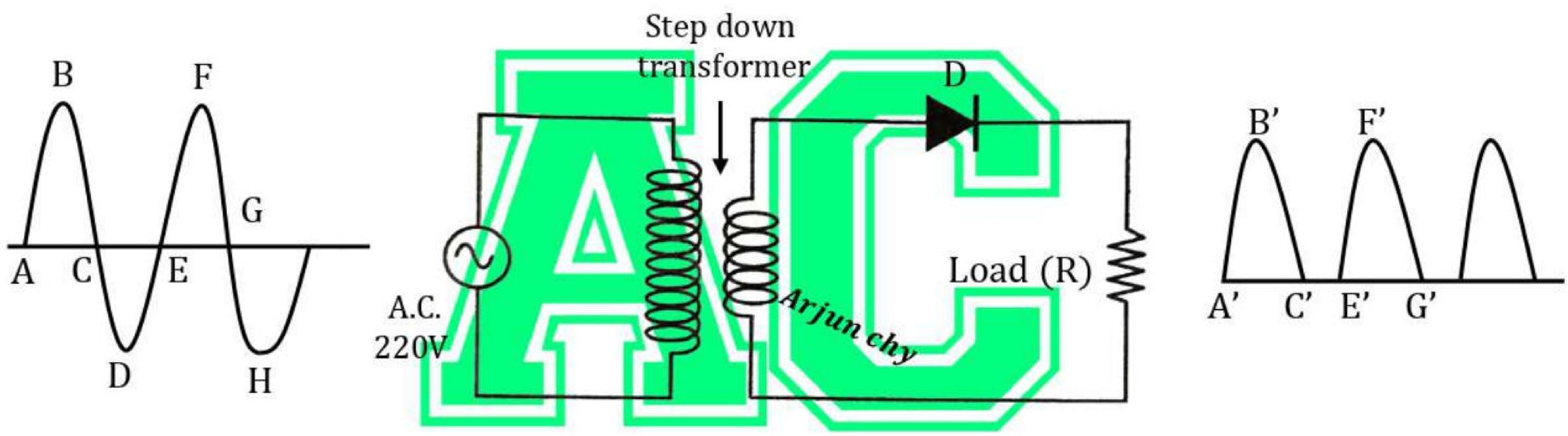

The alternating current from main supply is fed to the primary of a step-down transformer.

During first Half cycle of Input , the upper plate have positive potential and lower plate has Negative potential Hence, The Diode D is forward biased and act as Closed circuit and output is through load resistor(R)

**Download from www.arjun00.com.np

During second Half cycle of Input , the upper plate have negative potential and lower plate has positive potential Hence, The Diode D is **Reversed biased** and act as **open circuit** and No any output is generated in that cycle. And the Cycle continues and output wave form is shown in figure

9. What is galvanometer? How a galvanometer is converted into voltmeter?

- A **galvanometer** is an electric instrument used to detect feeble currents in electric circuits. It is also used to detect the direction of currents in circuits.

AC

To convert galvanometer into Voltmeter

- A device which is used to measure the potential difference across a resistor is called voltmeter. If a high resistance is connected in series with galvanometer, it can be converted into a voltmeter as shown in the figure. In other words, a voltmeter is a galvanometer with high resistance connected in series with it. Suppose,

www.arjun00.com.np

Resistance of galvanometer = G

Current required for galvanometer to produce full scale deflection = I_g

External high resistance in series with galvanometer = R

As both 'G' and 'R' being in series; then,

**Download from www.arjun00.com.np

$$V = I_g(R + G)$$

$$\text{or, } \frac{V}{I_g} = R + G$$

$$\therefore \quad R = \frac{V}{I_g} - G$$

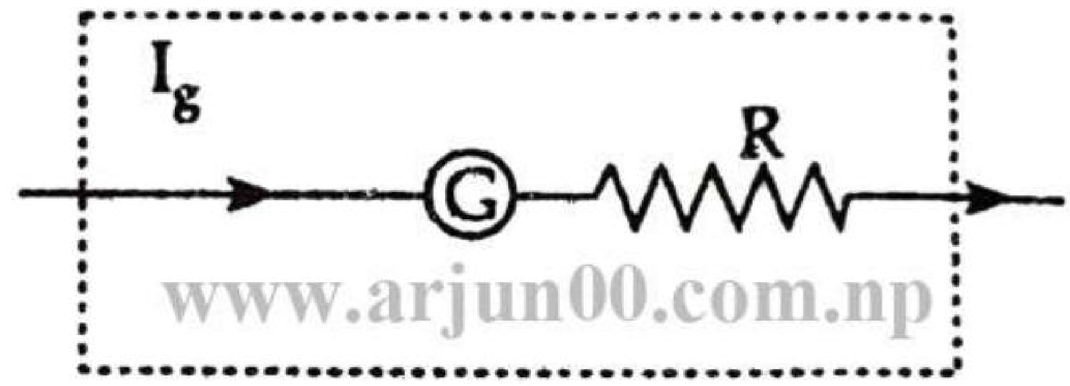

Conversion of galvanometer into voltmeter

This relation gives the value of high resistance to be chosen to convert a galvanometer into voltmeter of required range.

10. Differentiate between N-type and P-type semiconductor.

N-type	P-type
The Electrons are majority charge carriers and holes are minority charge carriers.	The Holes are majority charge carriers and electrons are minority charge carriers.
The majority of charge carriers move from low potential to high potential.	The majority of charge carriers move from high potential to low potential.
An donor is a doping atom that can produce an n-type semiconductor whenever introduced to a semiconductor	An acceptor is a contaminating atom that could produce a p-type semiconductor whenever introduced to a semiconductor.
Pentavalent impurities are added.	Trivalent impurities are added.
It has donor energy levels that are very close to the conduction band.	It has acceptor energy levels that are very close to the valence band.

**Download from www.arjun00.com.np

11. Define mass defect and binding energy.

- The difference between the actual mass of the nucleus and the masses of the constituent nucleons is called **mass defect**. The energy equivalent to mass defect is called **binding energy** of the nucleus. The larger the binding energy, the more stable the nucleus will be. It is also equal to the energy required for breaking up a nucleus into its constituent protons and neutrons and placing then at rest infinite distance from one another.

For example, when protons and neutrons (nucleons) combine to form a nucleus then mass of the resultant nucleus is always less than the total masses of the constituting nucleus. Deuteron consists of only one proton and one neutron.

Mass of neutron = 1.008665 a.m.u.

and, Mass of proton (hydrogen) =1.007825 a.m.u.

Total mass of a proton and a neutron = 2.016490 a.m.u.

But, atomic mass of deuterium is 2.014103, which is less than total mass of particles put together.

www.arjun00.com.np

The difference is known as mass defect which is equal to 0.002387 a.m.u.= 0.002387 eV = 2.22MeV

This energy 2.22 MeV binds two nucleons together and known as the binding energy.

**Download from www.arjun00.com.np

12. Derive Newton's formula for velocity of sound in air.

- Newton assumed that when sound waves propagate through gas, compression and rarefaction are produced in the medium. The changes of these compressions and rarefaction takes place at a slow rate. Hence, the process is isothermal. The equation of state for isothermal change is given by;

$$PV = K\,(\text{Constant}) \;\cdots\cdots\cdots (i)$$

Where, 'P' is pressure of the gas and 'V' is its volume.

On differentiating equation (i); we obtain,

$$P\,dV + V\,dP = 0$$

or, $P = -\frac{dP}{\frac{dV}{V}} = \frac{\text{stress}}{\text{strain}} = E$

Negative sign indicates that as the pressure increases the volume decreases and vice-versa. 'E' is isothermal bulk modulus of elasticity.

www.arjun00.com.np

$\therefore$ Velocity of sound in gas$(v) = \sqrt{\frac{E}{\rho}} = \sqrt{\frac{P}{\rho}}$

This is Newton's formula.

For air at N.T.P.; we have,

$P = 1.013 \times 10^5\ Nm^{-2}$ and, $\rho = 1.293\ kgm^{-3}$

$$\therefore\ v = \sqrt{\frac{P}{\rho}} = \sqrt{\frac{1.013\times10^5}{1.293}} = 280\ ms^{-1}$$

However, the velocity of sound in air at NTP is found experimentally as **332 m/s which is quite greater than the value calculated** above. Such difference in values shows that there are discrepancies in Newton's assumption and it needs correction.

**Download from www.arjun00.com.np

Group 'C'

13. The critical angle of light in a certain substance is 49°. What is the polarizing angle.

➢ **Solution**

Given that;

Critical angle $(C) = 49°$

Polarizing angle $(i_P) = ?$

From Brewster's law; we have,

$\mu = \tan i_P$; where i_P is polarizing angle.

www.arjun00.com.np

or, $\frac{1}{\sin C} = \tan i_P$; where C is the critical angle.

or, $\frac{1}{\sin 49°} = \tan i_P$

or, $1.325 = \tan i_P$

or, $i_P = \tan^{-1}(1.325)$

$= \mathbf{52.96°}$

Hence, Polarizing angle is $52.96°$.

14. The work function of potassium is 2.3 e.V. If the photoelectrons are emitted with maximum velocity of 10^4m/s, calculate the frequency of incident radiation on the metal.
(Given me= 9.1×10^{-31}kg , h = 6.62×10^{-34} Js)

➢ **Solution**

Given that;

Work function $(\phi) = 2.3$ eV $= 2.3 \times 1.6 \times 10^{-19} = 3.68 \times 19$ J

Velocity of photoelectrons $(v) = 10^4$m/s

**Download from www.arjun00.com.np

Mass of electron $(m) = 9.1 \times 10^{-31}$kg

Planck's constant $(h) = 6.62 \times 10^{-34}$Js

Frequency of incident radiation $(\nu) = ?$

We know that;

$$h\nu = \phi + \frac{1}{2}\ mv^2$$

www.arjun00.com.np

or, $6.62 \times 10^{-34} \times \nu = 3.68 \times 10^{-19} + \frac{1}{2} \times 9.1 \times 10^{-31} \times (10^4)^2$

or, $6.62 \times 10^{-34} \times \nu = 3.68 \times 10^{-19} + 4.55 \times 10^{-23} = 3.680455 \times 10^{-19}$

or, $\nu = \dfrac{3.680455 \times 10^{-19}}{6.62 \times 10^{-34}}$

$$\boldsymbol{\nu = 5.56 \times 10^{14}\ \text{Hz}}$$

15. A radioactive source decayed to $\left(\frac{1}{128}\right)^{th}$ of its initial activity after 50 days. What is its half-life.

➢ **Solution**

Given that;

Time taken $(t) = 50$ days

Half-life $\left(T_{\frac{1}{2}}\right) = ?$

Let, Initial activity $= A_0$

Final activity $(A) = \frac{A_0}{128}$

or, $\frac{A}{A_0} = \frac{1}{128}$

We know that;

**Download from www.arjun00.com.np

$$A = A_0 e^{-\lambda t} \quad \ldots\ldots\ldots\ldots\ldots\ldots\ldots\ldots\ldots\ldots (1)$$

Where, t= time period

A= Activity after time't'

A_0= initial Activity

λ= decay constant

Also,

$$\lambda = \frac{0.693}{T_{\frac{1}{2}}} \quad \ldots\ldots\ldots\ldots\ldots\ldots\ldots\ldots\ldots\ldots (2)$$

Where, $T_{\frac{1}{2}}$ = half life

From (1) & (2)

$$A = A_0\, e^{-\left[\frac{0.693}{T_{\frac{1}{2}}} \times t\right]}$$

www.arjun00.com.np

$$\text{or,} \quad \frac{A}{A_0} = e^{-\left[\frac{0.693}{T_{\frac{1}{2}}} \times t\right]}$$

$$\text{or,} \quad \frac{1}{128} = e^{-\left[\frac{0.693}{T_{\frac{1}{2}}} \times t\right]}$$

$$\text{or,} \quad \frac{1}{128} = \frac{1}{e^{\left(\frac{0.693 \times t}{T_{\frac{1}{2}}}\right)}}$$

$$\text{or,} \quad 128 = e^{\left(\frac{0.693 \times t}{T_{\frac{1}{2}}}\right)}$$

**Download from www.arjun00.com.np

Taking Both Side Natural logarithm In,

$$\text{In}\,(128) = \text{In}\, e^{\left(\frac{0.693 \times t}{T_{\frac{1}{2}}}\right)}$$

$$\text{In}\,(128) = \frac{0.693 \times t}{T_{\frac{1}{2}}} \qquad [\because \text{In}\, e^{a} = a]$$

$$T_{\frac{1}{2}} = \frac{0.693 \times 50}{\ln(128)}$$

$$= \mathbf{7.141\ days}$$

Hence, required half-life of given radioactive source is 7.141 days

16. An electric lamp is rated as 220V-100W. What is its electric resistance? What power does it consume if it is used in a circuit of 110V.

➢ **Solution**

Given that;

Power (P)= 100 W

Potential difference (V)= 220 V

We have,

$$P = \frac{V^2}{R}$$

www.arjun00.com.np

$$\therefore \quad R = \frac{V^2}{P} = \frac{(220)^2}{100} = \mathbf{484\ \Omega}$$

Now, if V=110 V; then,

$$\therefore P = \frac{V^2}{R} = \frac{(110)^2}{484} = \mathbf{25\ W}$$

**Download from www.arjun00.com.np

17. What force is required a wire 7 m long and 2mm in diameter is extended by 1mm? $(\mathbf{Y = 2 \times 10^{11}\ N/m^2})$

➢ **Solution**

Given that;

Length of Wire (l)= 7m

Diameter of Wire, $(d) = 2mm = 2 \times 10^{-3} m$

Young Modulus $(\gamma) = 2 \times 10^{11}\ \mathrm{N/m^2}$

Change in length $(dl) = 1\ mm = 10^{-3} m$

Now,

www.arjun00.com.np

$$strain = \frac{dl}{l} = \frac{10^{-3}}{7} = 1.42 \times 10^{-4}$$

$$\text{Area} = \frac{\pi d^2}{4} = \frac{\pi(2\times10^{-3})^2}{4} = 3.141 \times 10^{-6} \mathrm{m}^2$$

$$\gamma = \frac{\text{stress}}{\text{strain}}$$

$$\text{Stress} = \frac{F}{A}$$

$$\gamma = \frac{F/A}{\text{Strain}}$$

$$\gamma = \frac{F}{A.\text{Strain}}$$

$$F = \gamma\, A\, Strain$$

$$= \gamma\, A \left(\frac{dl}{l}\right)$$

$$= 2 \times 10^{11} \times 3.141 \times 10^{-6} \times 1.42 \times 10^{-4}$$

$$\mathbf{F = 89.221\ N}$$

Hence, Force Required to wire extended by 1mm is $\mathbf{89.221\ N}$

**Download from www.arjun00.com.np

18. Two charges 1μc and 2μc are placed at the corners A and B of equilateral triangle ABC of side 2m. Calculate the electric filed at C.

➢ **Solution**

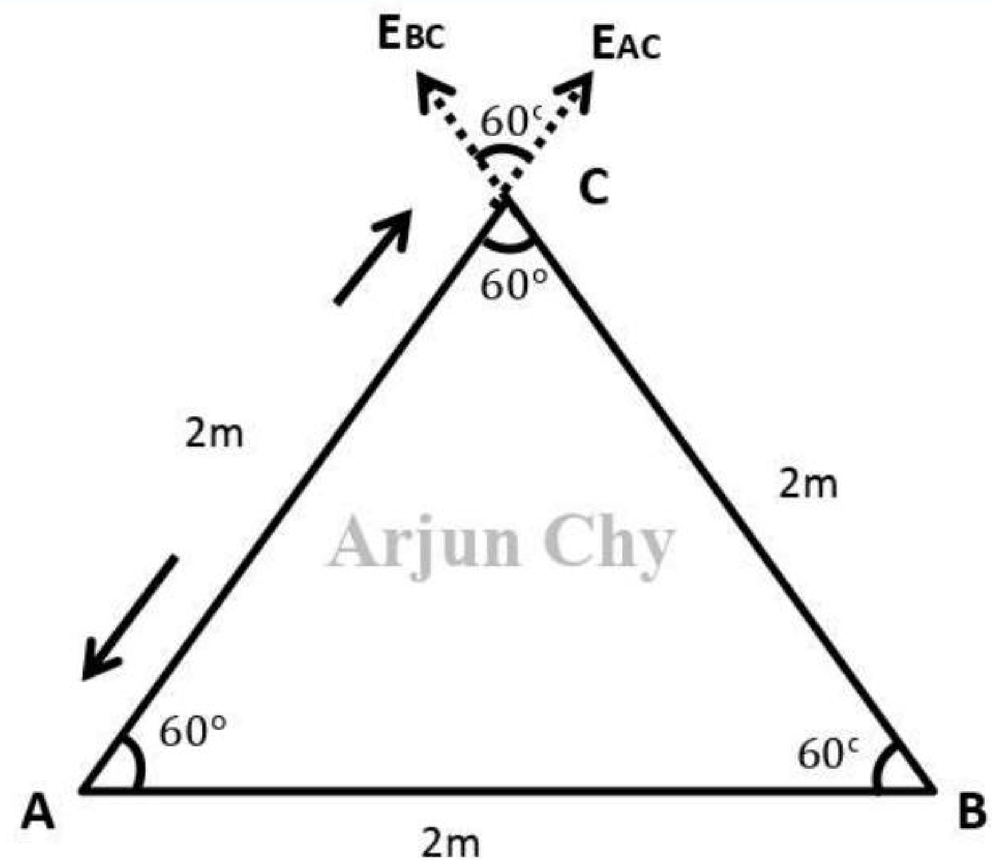

Given that;

$$q_1 = 1\mu C = 10^{-6} C$$

$$q_2 = 2\mu C = 2 \times 10^{-6} C$$

Standard Value for free space only,

$$\frac{1}{4\pi\epsilon_0} = 9 \times 10^9 \ Nm^2C^{-2}$$

Electric Field due to charge at A to C is,

$$E_{AC} = \frac{1}{4\pi\epsilon_0} \times \frac{q_1}{(r_{AC})^2}$$

$$= \frac{9\times10^9\times1\times10^{-6}}{2^2}$$

$$E_{AC} = 2250 \ N/C \quad \text{(Toward AC Outward)}$$

Similarly at Electric Field at B to C.

$$E_{BC} = \frac{1}{4\pi\epsilon_0} \times \frac{q_2}{(r_{BC})^2}$$

$$= \frac{9\times10^9\times2\times10^{-6}}{2^2}$$

$$E_{BC} = 4500 \ N/C \quad \text{(Toward BC Outward)}$$

**Download from www.arjun00.com.np

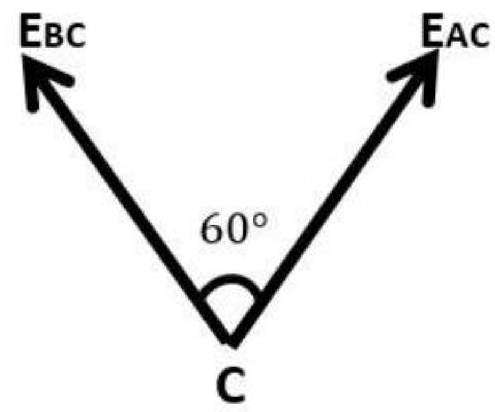

Now, Using Parallogram law of vector addition

$$\text{Enet} = \sqrt{E_{BC}{}^2 + E_{AC}{}^2 + 2E_{BC}.E_{AC}\,\text{Cos}\theta}$$

$$= \sqrt{(2250)^2 + (4500)^2 + 2 \times 2250 \times 4500.\cos(60)}$$

$$= \sqrt{(2250)^2 + (4500)^2 + 10125000}$$

Enet= 5952.94 N/C

19. Calculate the velocity of sound in air at $27°c$ if density of air at STP is 1.29 kg/m^3, $\gamma = 1.4$.

➢ **Solution**

www.arjun00.com.np

Given that;

Density of air at S.T.P $(\rho) = 1.29\ \text{kg/m}^3$

$\gamma = 1.4.$

Normal pressure $(P) = 0.76 \times 13600 \times 9.8 = 101292.8\ \text{N/m}^2$

We have,

$$\text{Velocity of sound at } 0°C(v_0) = \sqrt{\frac{\gamma P}{\rho}}$$

$$= \sqrt{\frac{1.4 \times 101292.8}{1.29}}$$

$$= 331.56\ \text{m/sec.}$$

**Download from www.arjun00.com.np

Let, v_1 be the velocity of sound at 27°C, then,

T_0= Temp at S.T.P = 0°C =273K,

T_1= 27°C = 273+27 = 300

$$V \propto \sqrt{T}$$

$$\frac{v_1}{v_0} = \sqrt{\frac{T_1}{T_0}}$$

$$v_1 = \sqrt{\frac{300}{273}} \times v_0$$

$$v_1 = \sqrt{\frac{300}{273}} \times 331.56$$

$$\therefore v_1 = \mathbf{347.56\ m/s}$$

www.arjun00.com.np

20. A battery of e.m.f. 4 Volt and internal resistance 2Ω is joined to a resistor of 8Ω. Calculate the current and terminal potential difference across the resistor.

➢ **Solution**

Given that;

E.M.F. of the cell $(E) = 4\ V$

Internal resistance $(r) = 2\ \Omega$

External resistance $(R) = 8\ \Omega$

Now, if 'I' be current through the wire; then,

$$E = IR + Ir$$

**Download from www.arjun00.com.np

$$\therefore I = \frac{E}{R+r} = \frac{4}{8+2} = 0.4A$$

Since, $E = V + Ir$

$$\therefore \quad V = E - Ir$$
$$= 4 - 0.4 \times 20$$
$$= \mathbf{3.2\ V}$$

–The End –

** "If you find a mistake in Question/Answer, Kindly take a Screenshot and email to info@arjun00.com.np "

**This Solution is for Educational Purpose Only. If you misuse it, we are not Responsible.

Support us

A Small gift will help maintain this website. →

Feel Free to Read at no cost.

Support us on: fonepay

you can donate as you wish.

ARJUN CHAUDHARY

2222120014283943

**Download from www.arjun00.com.np

Engg. Physics –II__(Engg. All) 2nd Sem

(2079) *Old + Very Old* Question Paper Solution.

Compile & Written by © Arjun Chy

Website :- www.arjun00.com.np

Facebook :-www.facebook.com/Arjun00.com.np

1. Define electric potential. Find the expression for it.

➢ See the Solution of 2079 Regular of Q.no 1 on Page no. 58

2. State Biot and Savart law. Use this law to find the magnetic field due to straight current carrying conductor.

➢ See the Solution of 2078 R/B of Q.no 3 on Page no. 36

www.arjun00.com.np

3. State Bohr's postulates and derive the expression for the energy of electron in nth orbit.

➢ See the Solution of 2077 R/B of Q.no 4 on Page no. 9

4. What are the laws of Radioactive disintegration Prove $N = Noe^{-\lambda t}$ for decay equation, where symbols have their usual meanings.

➢ The Laws of radioactive disintegration are:-

- Radioactive decay is a random and spontaneous process.
- In any radioactive decay, either an α- particle or β-particle is emitted by the atom. These law are called displacement laws.

**Download from www.arjun00.com.np

- The rate of disintegration of radioactive substance is directly proportional to the number of atoms present at that instant.

$$\frac{dN}{dt} \propto N$$

$$\text{i.e } \frac{\mathbf{dN}}{\mathbf{dt}} = -\boldsymbol{\lambda}\mathbf{N}$$

This is called decay law.

Let N_0 = Total number of atoms present originally in a sample at time $t = 0$

N=Total number of atoms left undecayed in the sample at time t

dN=a small number of atoms that disintegrate in a small interval of time dt

Rate of disintegration of the element,

$$R = \frac{dN}{dt} = -\lambda N \qquad \lambda = \text{disintegration constant}$$

$$\frac{dN}{dt} = -\lambda N$$

Integrate both side:

www.arjun00.com.np

$$\int \frac{dN}{N} = \int -\lambda dt$$

$$\log_e N = -\lambda t + C$$

$C =$ Constant of integration at $t = 0, N = N_0$

$$\log_e N = -\lambda \times 0 + C$$

$$\Rightarrow C = \log_e N_0$$

$$\log_e N = -\lambda t + \log_e N_0$$

**Download from www.arjun00.com.np

$$\log_e \frac{N}{N_0} = -\lambda t$$

$$\mathbf{N = N_0 e^{-\lambda t}}$$ **Proved.**

5. What are coherent sources of light show that fringe width are equal for bright and dark fringes in Young's double slit experiment.

- Two sources of light, which continuously emit light waves of same wavelength or frequency and are always in phase or have a constant phase differences are called coherent sources.

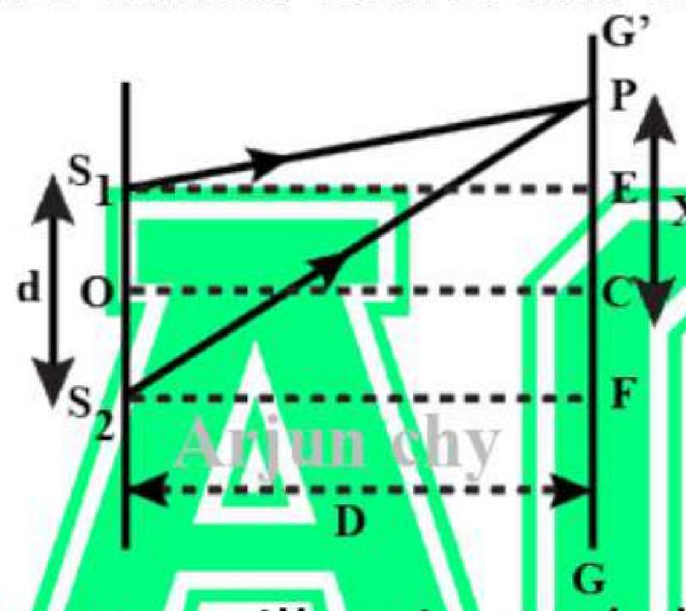

- When light waves from two illuminated slits is incident on the screen, the path traveled by each light wave is different. This path difference leads to a phase difference in the two light waves. The path difference is different for each point on the screen and hence, intensity is different for all the points. This leads to the formation and bright and dark fringes on the screen.

Consider point P on the screen as shown in the figure.

$$S_2P^2 = S_2F^2 + PF^2$$

$$S_2P = \sqrt{D^2 + \left(X + \frac{d}{2}\right)^2} \Rightarrow S_2P^2 = D^2 + \left(X + \frac{d}{2}\right)^2$$

Similarly,

$$S_1P = \sqrt{D^2 + \left(X - \frac{d}{2}\right)^2} \Rightarrow S_1P^2 = D^2 + \left(X - \frac{d}{2}\right)^2$$

**Download from www.arjun00.com.np

$$\text{Or,} S_2P^2 - S_1P^2 = D^2 + \left(x + \frac{d}{2}\right)^2 - D^2 - \left(x - \frac{d}{2}\right)^2$$

$$\text{or,} (S_2P - S_1P)(S_2P + S_1P) = \left(x + \frac{d}{2}\right)^2 - \left(x - \frac{d}{2}\right)^2$$

$$\text{or,} (S_2P - S_1P)(S_2P + S_1P) = \left(x^2 + xd + \frac{d^2}{4}\right) - \left(x^2 - xd + \frac{d^2}{4}\right)$$

www.arjun00.com.np

$$\text{or,} (S_2P - S_1P)(S_2P + S_1P) = 2xd$$

As , $S_2P \cong S_1P = D$ so, $S_2P + S_1P = D + D = 2D$

$$\text{or,} (S_2P - S_1P).2D = 2xd$$

$$\text{or,} (S_2P - S_1P) = \frac{xd}{D}$$

Path difference $=(S_2P - S_1P) = \frac{xd}{D}$

For constructive interference i.e. bright fringes,

∵Path difference is integral multiple of wave length λ

$$n\lambda = \frac{xd}{D}$$ where n=0,1,2,...

$$X_n = \frac{n\lambda D}{d}$$

Fringe width is equal to the distance between two consecutive maxima.

$$\beta = X_n - X_{n-1} = \frac{n\lambda D}{d} - \frac{(n-1)\lambda D}{d}$$

$$\boldsymbol{\beta = \frac{\lambda D}{d} \cdots\cdots\cdots (1)}$$

For Destructive interference i.e. for dark fringes;

∵Path difference is old multiple of wave length $\frac{\lambda}{2}$

$$\frac{xd}{D} = (2n-1)\frac{\lambda}{2}$$

Where n = 1, 2, 3....

$$X_n = (2n-1)\frac{\lambda D}{2d}$$

**Download from www.arjun00.com.np

Fringe width is equal to the distance between two Destructive minima.

$$\beta = X_n - X_{n-1} = (2n-1)\frac{\lambda D}{2d} - \{2(n-1)-1\}\frac{\lambda D}{2d}$$

$$= (2n-1)\frac{\lambda D}{2d} - \{2n-2-1\}\frac{\lambda D}{2d}$$

$$= (2n-1)\frac{\lambda D}{2d} - (2n-1)\frac{\lambda D}{2d} + 2.\frac{\lambda D}{2d}$$

$$= 2\frac{\lambda D}{2d}$$

$$\boldsymbol{\beta = \frac{\lambda D}{d}} \cdots\cdots\cdots (2)$$

From eq. (1) and (2), it is clear that width of bright fringe is equal to the width of the dark fringe.

www.arjun00.com.np

6. Find the capacitance of a parallel plate capacitor.

- Two metal plates are placed parallel to each other separated by dielectric material forms a parallel plate capacitor.

Let two parallel plates having area 'A', each separated by 'd' forms a parallel plate capacitor. If 'Q' charge is given on upper plate and surface density of the charged plate is, σ then,

$$\text{Charge density } (\sigma) = \frac{Q}{A} \quad \cdots\cdots\cdots (i)$$

$$E = \frac{\sigma}{\varepsilon_0} \quad \cdots\cdots\cdots (ii)$$

**Download from www.arjun00.com.np

From equations (i) and (ii); we get,

$$E = \frac{Q}{A\varepsilon_0} \qquad \cdots\cdots\cdots (iii)$$

If 'V' is the potential difference between the plates; then,

$$E = \frac{V}{d} \qquad \cdots\cdots\cdots (iv)$$

Now, equation (iii) and (iv); we get,

$$\frac{V}{d} = \frac{Q}{A\varepsilon_0}$$

$$or, \quad \frac{Q}{V} = \frac{\varepsilon_0 A}{d}$$

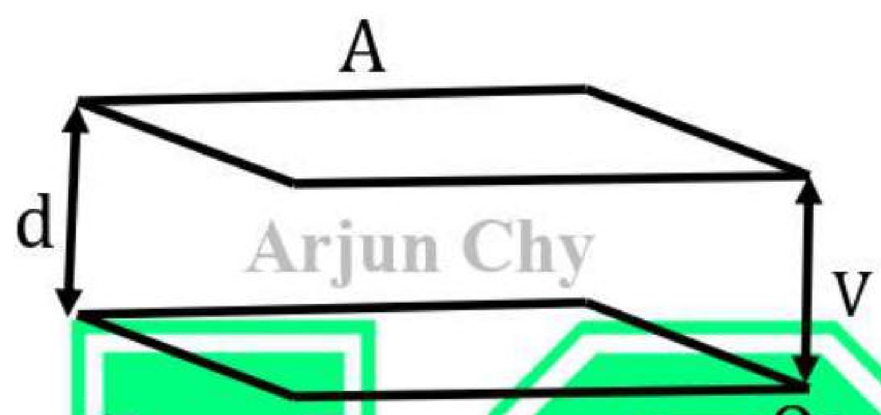

$$i.e, \quad C = \frac{\varepsilon_0 A}{d} \qquad \left[\because \text{Capacitance}(C) = \frac{Q}{V}\right]$$

Hence, the capacitance of parallel plate capacitor is $\frac{\varepsilon_0 A}{d}$.

7. State and explain Faraday's law of electromagnetic induction.

➢ **Statement:**

- When the magnetic flux linking a coil changes, an e.m.f. is induced in it.
- This induced e.m.f. lasts so long as the change in magnetic flux continues.
- The induced e.m.f. in the coil is directly proportional to the rate of change of flux linkages.

$i.e.$ If the magnetic flux linking a coil changes from ϕ_1 to ϕ_2 and induced e.m.f. in it is ε, Faraday's law of electromagnetic induction

Induced e.m.f. $\propto$ rate of change of flux linkages.

**Download from www.arjun00.com.np

$$\varepsilon \propto \frac{\phi_2 - \phi_1}{t}$$

$$\varepsilon = -k\,\frac{\phi_2 - \phi_1}{t}$$

Where, K is proportionality constant and

$-ve$ sign due to lenz's law, i.e The direction of induced current is such that It oppose the cause which produced it

In SI unit, K=1

$$\varepsilon = -\frac{\phi_2 - \phi_1}{t}$$

www.arjun00.com.np

Or, $\varepsilon = -\frac{d\phi}{dt}$ [In Differential form]

Induced e.m.f for N number of turns of Coils,

$$\boldsymbol{\varepsilon = -N\frac{d\phi}{dt}}$$

8. What is wheatstone bridge? Obtain the balancing condition of wheatshone bridge using Kirchhoff's law.

➢ **See the Solution of 2077 R/B of Q.no 2 on Page no. 5**

9. Define surface tension. Derive an expression to calculate surface tension of liquid by capillary rise method.

➢ **See the Solution of 2079 Regular of Q.no 2 on Page no. 60**

**Download from www.arjun00.com.np

10. Differentiate between p-type and N-type semiconductor.

➢ See the Solution of 2079 Regular of Q.no 10 on Page no. 70

11. Find the impedance of LR circuit.

➢ Consider an a.c. circuit containing an inductor 'L', and resistor 'R'. The voltage across 'R', V_R is in phase with the current. The voltage across 'L', leads the current by $90°$.

$V_R = IR$

$V_L = IX_L$

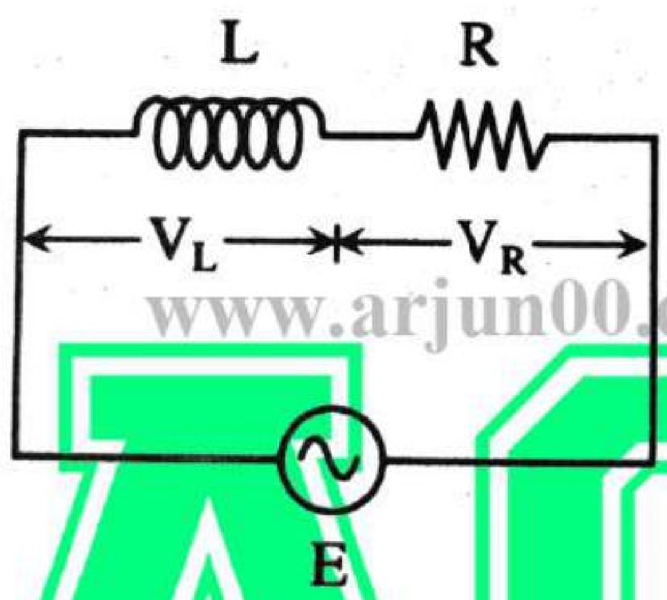

Figure: (i)

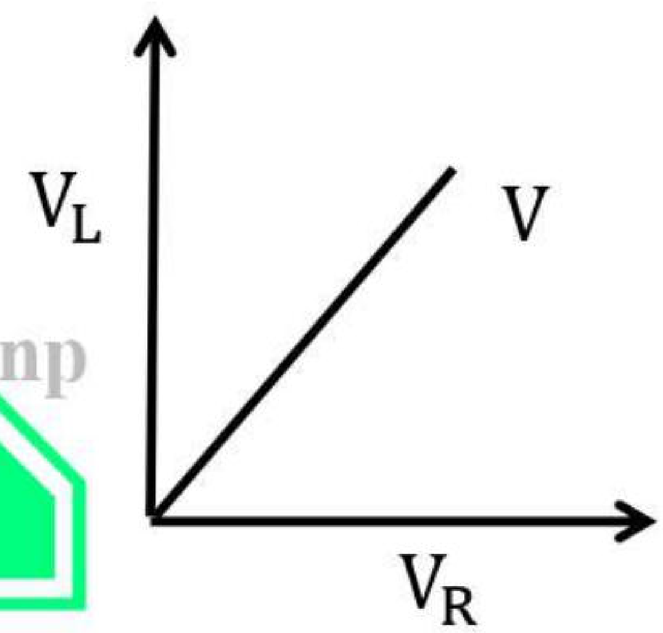

Figure: (ii)

www.arjun00.com.np

Resulting voltage between V_L and V_R is 'V' is given by,

$$V^2 = V_R^2 + (V_L)^2 \quad \textbf{[from fig. ii]}$$

$$= (IR)^2 + (IX_L)^2$$

or, $I^2 = \frac{V^2}{R^2+(X_L)^2}$

or, $I = \frac{V}{\sqrt{R^2+X_L{}^2}}$

From above relation; $I = \frac{V}{Z}$,

$$\textbf{Impedance}(Z) = \sqrt{R^2 + X_L{}^2}$$

**Download from www.arjun00.com.np

12. Two charge of 2μc and 1μc are located at two corners of an equilateral triangle of side 10cm. Find electric field intensity at third corner of the triangle.

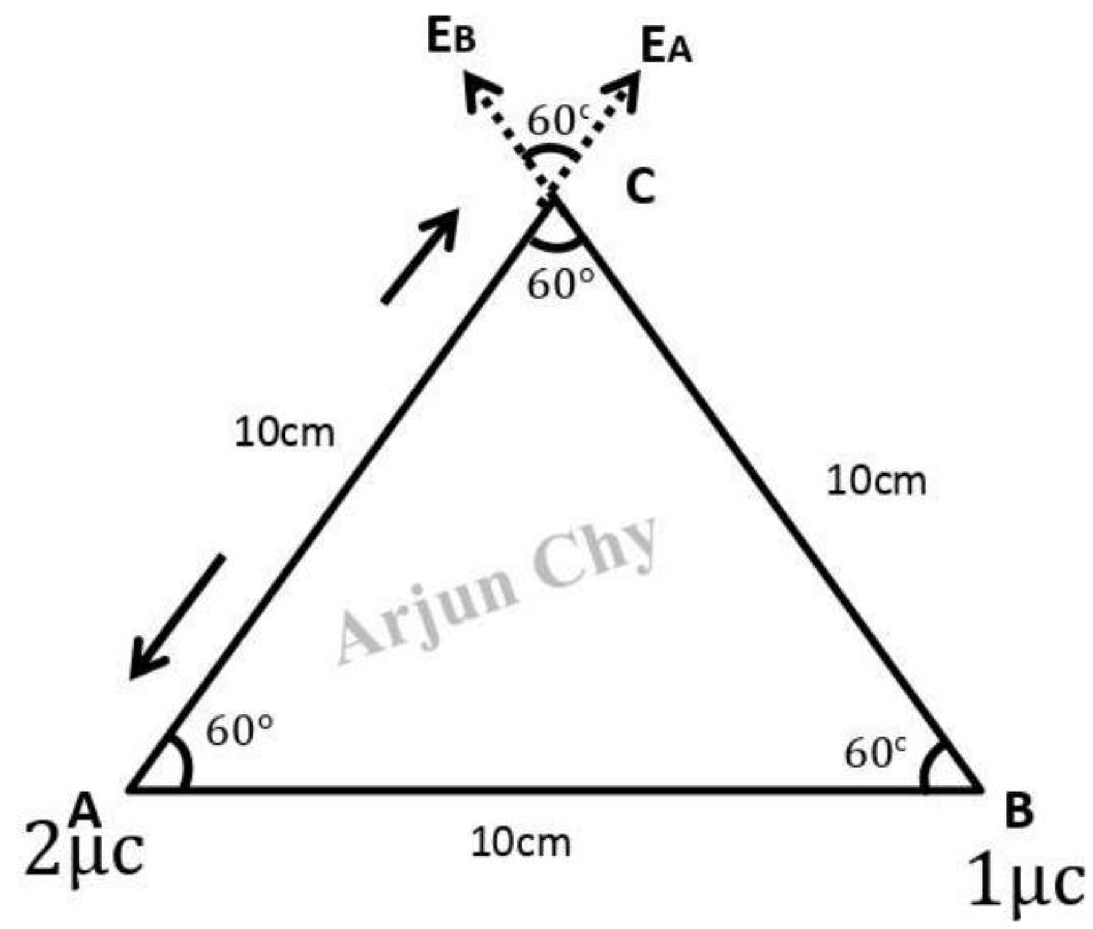

➢ **Solution**

Given that;

$$q_1 = 2\mu C$$

$$q_2 = 1\mu C$$

$$AB = BC = AC$$
$$= 10 \text{ cm}$$
$$= 0.1 \text{ m}$$

Electric Field due to charge at A to C is,

$$E_A = \frac{1}{4\pi\epsilon_0} \times \frac{q_1}{(r_{AC})^2}$$

$$= \frac{9\times10^9 \times 1\times10^{-6}}{(0.1)^2}$$

$$E_A = 0.9 \times 10^6 \quad \text{(Toward AC Outward)}$$

Similarly at Electric Field at B to C.

$$E_B = \frac{1}{4\pi\epsilon_0} \times \frac{q_2}{(r_{BC})^2}$$

$$= \frac{9\times10^9\times2\times10^6}{(0.1)^2}$$

$$= 1.8 \times 10^6 \; N/C$$

$$E_B = 1800 \text{ N/C} \quad \text{(Toward BC Outward)}$$

**Download from www.arjun00.com.np

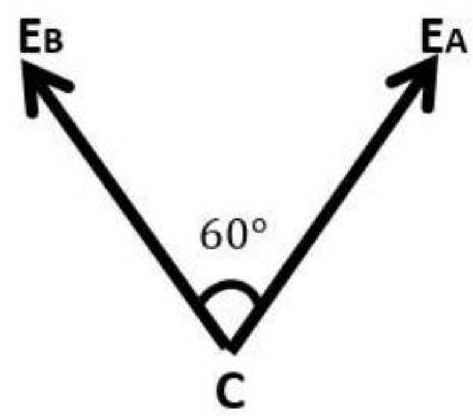

Now, Using Parallogram law of vector addition

$$\text{Enet} = \sqrt{E_B{}^2 + E_A{}^2 + 2E_B.E_A \cos\theta}$$

$$= \sqrt{(1800)^2 + (900)^2 + 2 \times 1800 \times 900.\cos(60)}$$

Enet = 2381.17 K N/C

13. Two resistors for 1200Ω and 800 Ω are connected in series with battery of emf 24v and negligible internal resistance. A Voltmeter of resistance 600 Ω is now connected across 800Ω resistor. Find potential difference recorded by voltmeter.

➢ **Solution**

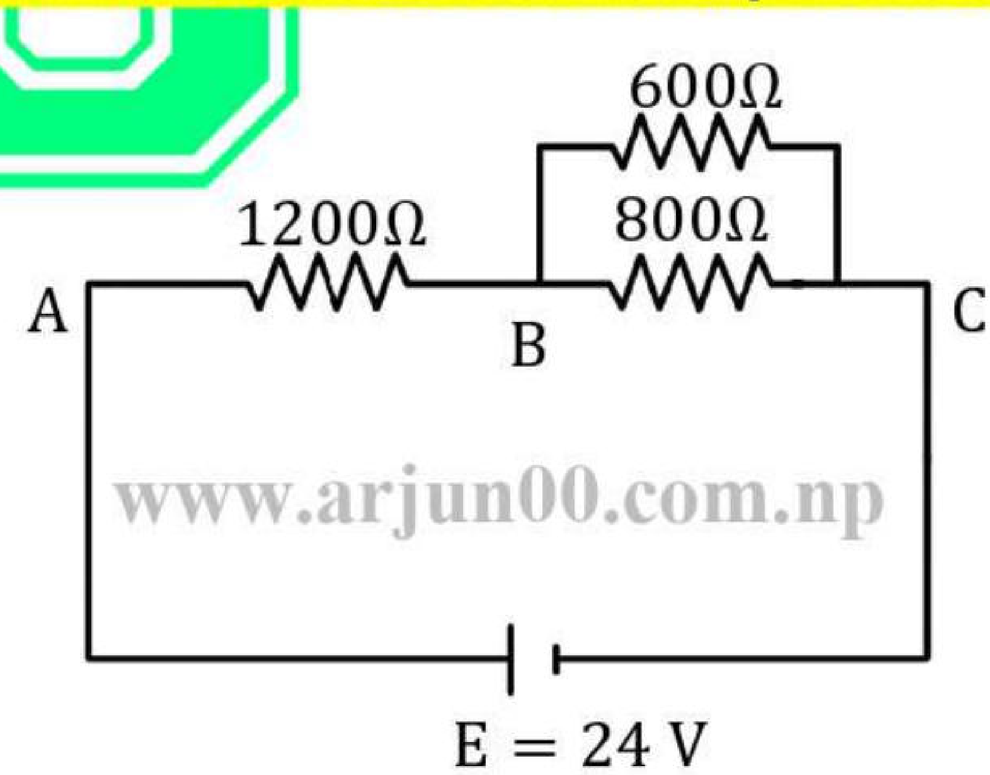

Since,

Voltmeter of Resistance 600 Ω is Connected cross R = 800 Ω.

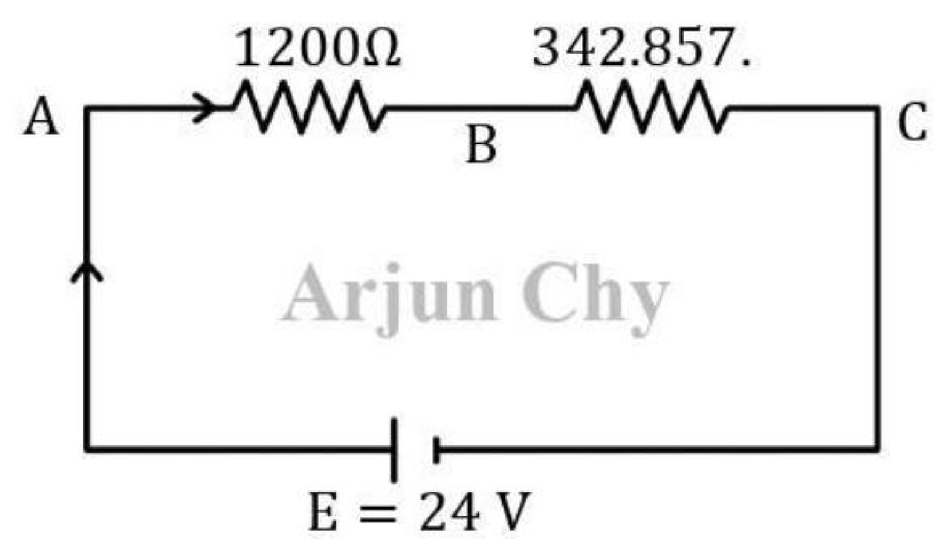

**Download from www.arjun00.com.np

Since, 600 Ω & 800 Ω are in parallel

So, R_{BC} be Resistance between BC,

$$\frac{1}{R_{BC}} = \frac{1}{600} + \frac{1}{800}$$

$$\frac{1}{R_{BC}} = \frac{7}{2400}$$

$$\Longrightarrow R_{BC} = 342.857\Omega$$

Total Resistance in circuit $R_{AC} = 1200 + 342.857$

$$= 1542.857\Omega$$

Current in Circuit, $I = \frac{E}{R_{AC}} = \frac{24}{1542.857} = 0.0156\ A$

P.d. a cross BC $= I\,.\,R_{BC}$

$$= 0.0156 \times 342.857$$

$$= 5.948\ \text{Volts}$$

Hence, Potential difference recorded by voltmeter,

$$\mathbf{V_{BC} = 5.348\ Volts}$$

www.arjun00.com.np

14. A Circular coil of radius 2cm and carrying current 10mA. Find the magnetic field at its centre. ($\mu_0 = 4\pi \times 10^{-7}\ N/A^2$)

➢ **Solution**

$radius\ of\ circular\ coil, R = 2cm = 0.02m$

$current\ , I = 10mA = 10 \times 10^{-3}$

$\mu_0 = 4\pi \times 10^{-7}\ N/A^2$

**Download from www.arjun00.com.np

We have,

$$B \text{ at centre } = \frac{\mu_0 I}{2R}$$

$$= \frac{4\pi\times10^{-7} \times 10\times10^{-3}}{2\times0.02}$$

$$= \mathbf{3.14 \times 10^{-7}\ Tesla}$$

15. One Junction of thermocouple is at 0°c and the other at θ°c. The thermos emf (in volts) is given by $E = 20\times10^{-6} - 0.02\times10^{-6}\theta^2$. Find the temperature and maximum value of emf.

➢ **Solution**

Given,

[*note*: $E = 20\times10^{-6} - 0.02\times10^{-6}\theta^2$ *Then*,
$\theta_n = 0°C$ which is not possible so, question must be wrong

www.arjun00.com.np

Correct question is , $E = 20\times10^{-6}\theta - 0.02\times10^{-6}\theta^2$]

$$E = 20\times10^{-6}\theta - 0.02\times10^{-6}\theta^2$$

$$\therefore \frac{dE}{d\theta} = 20\times10^{-6} - 0.02\times10^{-6}\times2\theta$$

$$= 2\times10^{-5} - 4\times10^{-8}\theta$$

At neutral temperature θ_n, thermo emf is maximum i.e. at $\theta = \theta_n$,

$$\frac{dE}{d\theta} = 0$$

or, $2\times10^{-5} - 4\theta_n\times10^{-6}\times{\theta_n}^2$

or, $\theta_n = \frac{1000}{2}$

$$\therefore \theta_n = 500°C$$

**Download from www.arjun00.com.np

$$Also, E = 0 \; when \; at \; \theta = \theta_i,$$

$$20 \times 10^{-6}\,\theta_i - 0.02 \times 10^{-6}\,{\theta_i}^2 = 0$$

$$\theta_i(20 \times 10^{-6} - 0.02 \times 10^{-6}\,\theta_i) = 0$$

$$As, \theta_i \neq 0 \; so, \qquad 20 \times 10^{-6} - 0.02 \times 10^{-6}\,\theta_i = 0$$

$$\theta_i = \frac{20 \times 10^{-6}}{0.02 \times 10^{-6}}$$

$$\theta_i = 1000°\mathrm{C}$$

Also, $E_m = 20 \times 10^{-6}\theta_n - 0.02 \times 10^{-6} \times {\theta_n}^2$

$= 20 \times 10^{-6} \times 500 - 0.02 \times 10^{-6} \times (500)^2$

$= 0.005\mathrm{V}$

$= 5\mathrm{mV}$

www.arjun00.com.np

∴ Neutral temperature θ_n = **500°C**

Temperature of Inversion = **1000°C**

Maximum thermo emf = **5mV**

16. Find the refractive index of a medium having angle of polarization 30°.

➢ **Solution**

Given that;

Angle of Polarizing angle , $\theta_P = 30°$

To find :- Refractive index =?

From Brewster's law;

we have,

**Download from www.arjun00.com.np

$$\text{or, } \mu = \tan \theta_P$$

$$\text{or, } \mu = \tan(30)$$

$$\text{or, } \mu = \frac{1}{\sqrt{3}}$$

$$\boldsymbol{\mu = 0.5774}$$

Hence, Refractive index is 0.5774.

www.arjun00.com.np

17. Find the force required to stretch a wire of length 10m and diameter 4mm by 2mm? ($Y = 2 \times 10^{11} N/m^2$)

➢ **Solution**

Given that;

Length of Wire (l)= 10m

Diameter of Wire, $(d) = 4mm = 4 \times 10^{-3} m$

Young Modulus (γ) $= 2 \times 10^{11}$ N/m^2

Change in length $(dl) = 2\,mm = 2 \times 10^{-3} m$

Now,

$$\gamma = \frac{\text{stress}}{\text{strain}}$$

$$\text{Stress} = \frac{F}{A}$$

$$\text{strain} = \frac{dl}{l} = \frac{2 \times 10^{-3}}{10} = 2 \times 10^{-4}$$

$$\text{Area} = \frac{\pi d^2}{4} = \frac{\pi(4 \times 10^{-3})^2}{4} = 1.25 \times 10^{-5} m^2$$

**Download from www.arjun00.com.np

$$\gamma = \frac{F/A}{\text{Strain}}$$

$$\gamma = \frac{F}{A.\text{Strain}}$$

$$F = \gamma A\, Strain$$

$$= \gamma A\left(\frac{dl}{l}\right)$$

$$= 2 \times 10^{11} \times 1.25 \times 10^{-5} \times 2 \times 10^{-4}$$

$$\therefore \mathbf{F = 502.65\ N}$$

18. Find the temperature at which velocity of sound is double than at 10°c.

www.arjun00.com.np

➢ **Solution**

Let 'T' be temperature at which the velocity of sound is double that at 10°C

At 10°C

$T_1 = ?$ $\qquad$ $T_2 = 10 + 273 = 283\ K$

And, by question,

$V_1 = 2\ V_2 \quad \cdots\cdots\cdots (i)$

We have,

Velocity is directly prop. to square root of temperature

$$V \propto \sqrt{T}$$

**Download from www.arjun00.com.np

So,

$$\frac{V_1}{V_2} = \sqrt{\frac{T_1}{T_2}}$$

$$\frac{2V_2}{V_2} = \sqrt{\frac{T_1}{283}} \quad [\because \ from\ (i)\ ]$$

$$\Rightarrow 4 = \frac{T_1}{283}$$

$$T_1 = 1132\ K$$

$$T_1 = (1132 - 273)°C$$

$$\therefore \boldsymbol{T_1 = 859°C}$$

Hence,

$859°C$ at which velocity of sound is double than at $10°C$

-The End-

** "If you find a mistake in Question/Answer, Kindly take a Screenshot and email to info@arjun00.com.np "

**This Solution is for Educational Purpose Only. If you misuse it, we are not Responsible.

Support us

A Small gift will help maintain this website. ⟶

Feel Free to Read at no cost.
Support us on: fonepay
you can donate as you wish.

ARJUN CHAUDHARY
2222120014283943

**Download from www.arjun00.com.np

Engineering Physics –II__(Engg. All) 2nd Sem

(2080 Old + Very Old) Question Solution.

Compile & Written by © Arjun Chy

Website :- www.arjun00.com.np

Facebook :-www.facebook.com/Arjun00.com.np

1) State Kirchhoff's law. Hence, use it to deduce the balance condition of wheat stone bridge.

i) Kirchhoff's First law

- The algebraic sum of currents meeting at any point in circuit is zero. Let 'A', 'B', 'C', 'D' and 'E' are conductors joining at a point 'O'. The currents are flowing towards and away from the Point 'O'. Then, algebraic sum currents meeting at the point 'O' is;

$$I_1 + I_2 + I_3 - I_3 - I_5$$

According to Kirchhoff's Law; we have,

$$I_1 + I_2 + I_3 - I_3 + I_5 = 0$$

In general;

$$\sum I = 0$$

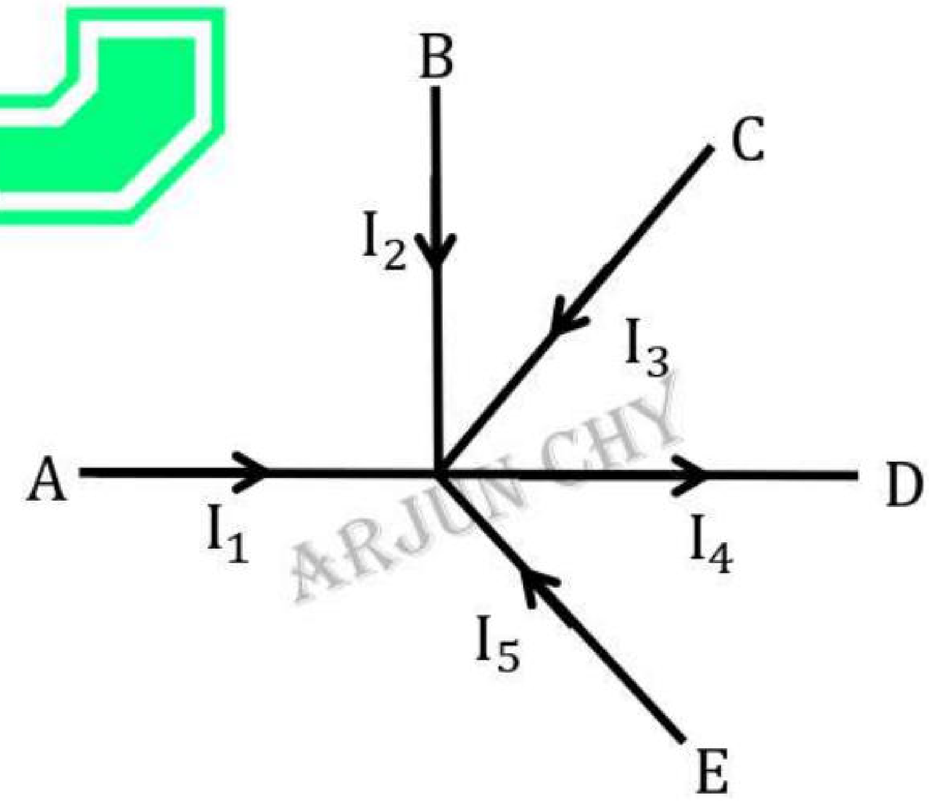

ii) Kirchhoff's Second law

- *According to Kirchhoff's Voltage Law*, In any closed circuit the algebraic sum of the products of the currents and resistance of each part of the circuit is equal to the algebraic sum of e.m.f.'s in that circuit. *For example*; In the circuit given

$$I_1R_1 + I_2R_2 + I_3R_3 = E$$

**Download from www.arjun00.com.np

In general;

$$\sum IR = \sum E$$

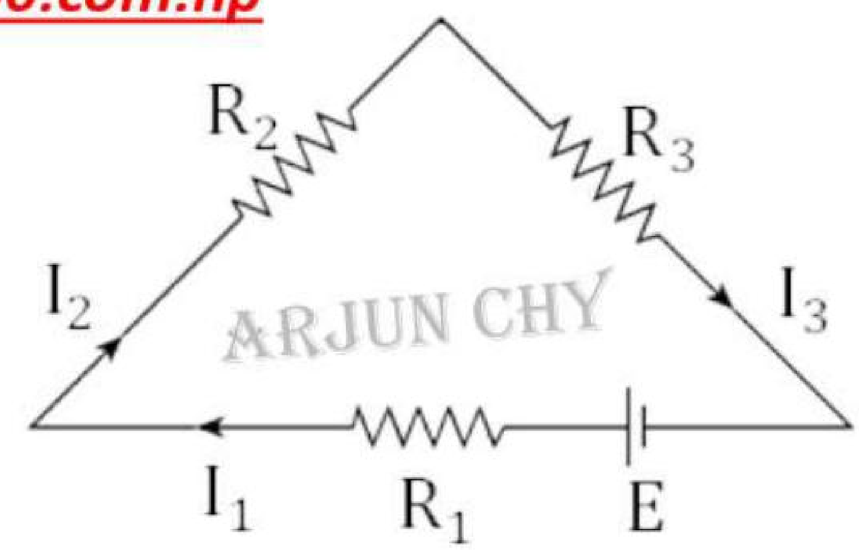

The equation is true for any closed circuit.

➢ Balance condition of Wheatstone bridge.

Wheatstone bridge consists of four resistances 'P', 'Q', 'R' and 'X' connected to a battery as shown in the figure. The currents flowing through them are I_1, I_2, I_3 and I_4 respectively. The current through the galvanometer is I_G and its resistance is 'G'.

Divide the bridge into closed circuits (1), (2) and (3).

Applying Kirchhoff's first law at different points,

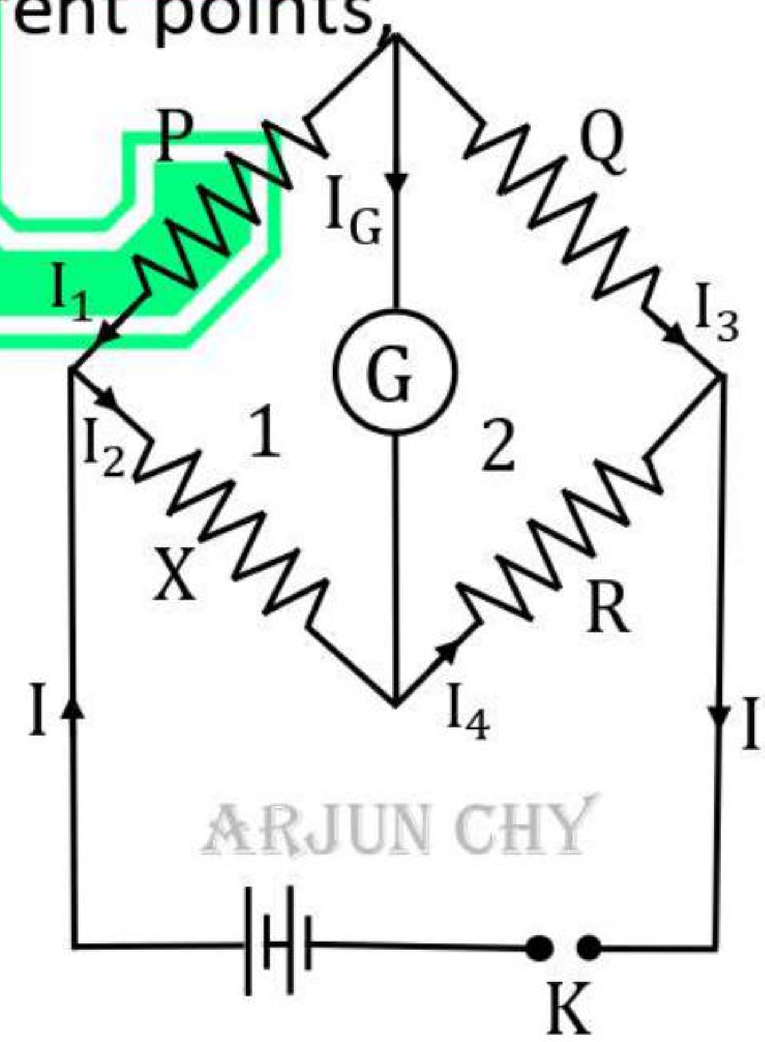

At Point A,

$$I - (I_1 + I_2) = 0$$

$or,\ \ I = I_1 + I_2$

$\therefore\ \ I_2 = I - I_1 \qquad \cdots\cdots\cdots (1)$

At Point B,

$$I_1 = I_G + I_3$$

At balance condition; $I_G = 0$

$\therefore\ \ I_3 = I_1 \qquad \cdots\cdots\cdots (2)$

At Point C,

$$I_3 + I_4 = I$$

Substituting value of I_3; we get,

**Download from www.arjun00.com.np

$$I = I_1 + I_4$$

$$or,\ \ I_4 = I - I_1 \qquad \cdots\cdots (3)$$

Now, using second law for different closed circuits,
For closed circuits (1);

$$I_1P - I_2X = 0$$

Substituting the value of I_2 form (1); we have,

$$I_1P - (I - I_1)X = 0$$

$$or,\ \ I_1P - I + I_1X = 0$$

$$or,\ \ I_1(P + X) - IX = 0 \qquad \cdots\cdots (4)$$

Similary, for closed circuit (2);

$$I_3Q - I_4R = 0$$

Substituting the value of I_3 and I_4 form equation (2) & (1); we get,

www.arjun00.com.np

$$I_1Q - (I - I_1)R = 0$$

$$or,\ \ I_1(Q + R) - IR = 0 \qquad \cdots\cdots (5)$$

Multiplying equation (4)by $(Q + R)$and equation (5)by $(P + X)$ and **on subtraction**; we have ,

$$\begin{array}{rl} & I_1(P + X)(Q + R) - IX(Q + R) = 0 \\ - & I_1(P + X)(Q + R) - IR(P + X) = 0 \\ - & \qquad\qquad\qquad\qquad + \\ \hline & IR(P + X) - IX(Q + R) = 0 \end{array}$$

$$or,\ \ I[R(P + X) - X(Q + R)] = 0$$

$$or,\ \ RP + RX - QX - RX = 0$$

$$or,\ \ RP = QX$$

**Download from www.arjun00.com.np

$$\therefore \quad \frac{P}{Q} = \frac{X}{R}$$

This is the required relation for balanced condition of a wheatstone bridge.

2) Define potential difference between two points. Derive the expression for the electric potential at a point.

- The potential difference between two points inside the electric field is defined as the amount of work done in moving a unit positive test charge from one point another point against the electric field.

Expression for Electric potential at a point

- Consider a positive charge +q placed at a point 'O' in vacuum as shown in the figure and another point 'A' at a distance 'r' from 'O'. Then, according to the definition, potential V_a at a point 'A' is equal to the amount of work done $W_{\infty a}$ in bringing a unit positive charge form infinity to point 'A'.

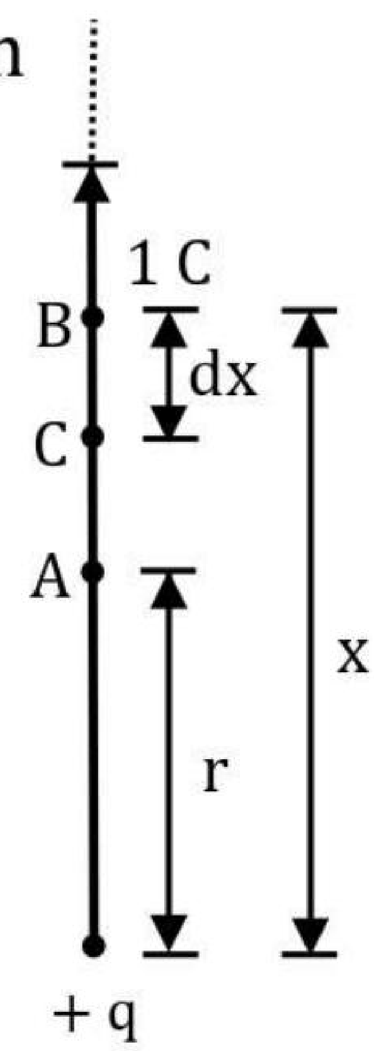

www.arjun00.com.np

$$\therefore \quad V_a = W_{\infty a}$$

$$F = \frac{q}{4\pi\varepsilon_0 x^2}$$

Let, from point 'B', the unit positive charge is moved to point 'C' by an infinitesimal small distance dx. Then, amount of work done in moving the unit positive charge by distance dx against the force 'F' is given by;

$$dW = -F\,dx = -\frac{q}{4\pi\varepsilon_0 x^2}\,dx$$

**Download from www.arjun00.com.np

Where, negative sign shows that, unit positive charge is displaced against the electrostatic force acting on it.

Now, the total work done in bringing the unit positive charge from infinity to point 'A' is obtained as;

$$W_{\infty a} = \int_{\infty}^{A} dW = \int_{\infty}^{r} \left(\frac{-q}{4\pi\varepsilon_0 x^2}\right) dx$$

$$= \frac{q}{4\pi\varepsilon_0}\int_{\infty}^{r} x^{-2} dx = \frac{-q}{4\pi\varepsilon_0}\left[\frac{x^{-1}}{-1}\right]_{\infty}^{r} = \frac{q}{4\pi\varepsilon_0}\left[\frac{1}{x}\right]_{\infty}^{r} = \frac{q}{4\pi\varepsilon_0}\left(\frac{1}{r} - \frac{1}{\infty}\right)$$

$$\therefore W_{\infty a} = \frac{q}{4\pi\varepsilon_0 r}$$

Hence, electric potential at point 'A' $(V_a) = \frac{q}{4\pi\varepsilon_0 r}$

It means that if a unit positive charge (*i.e.,* 1 C of charge) is taken from infinity to point 'A' at a distance 'r' from source charge +q, the unit positive charge will have potential energy of $V = \frac{q}{4\pi\varepsilon_0 r}$. The potential energy gained by the unit positive charge comes from the work done in moving the unit positive charge from infinity to that point.

In S. I. ; unit of potential is Joule/Coulomb or Volt.

www.arjun00.com.np

3) State Biot-Savart's law use this law to find the magnetic field at any point on the axis of the circular coil.

- Biot savart law states that " magnetic field due to a current-carrying conductor at a point 'P' is inversely proportional to the square of the distance between the conductor and point, and the magnetic field is directly proportional to the length of the conductor, current flowing in the conductor ".

**Download from www.arjun00.com.np

Then, according to Biot-Savart law; we can write,

$$\Delta B \propto I \quad \cdots\cdots (1)$$

$$\Delta B \propto \Delta I \quad \cdots\cdots (2)$$

$$\Delta B \propto \frac{1}{r^2} \quad \cdots\cdots (3)$$

$$\Delta B \propto \sin\alpha \quad \cdots\cdots (4)$$

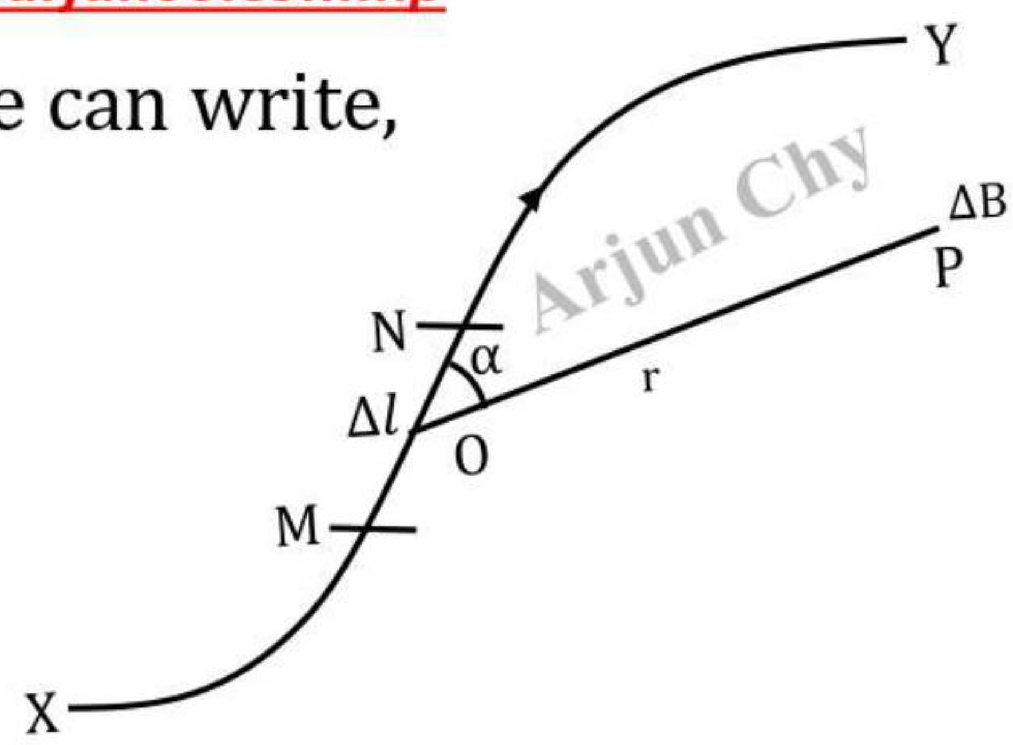

Biot - Savart law

Magnetic field at any point on the axis of the circular coil.

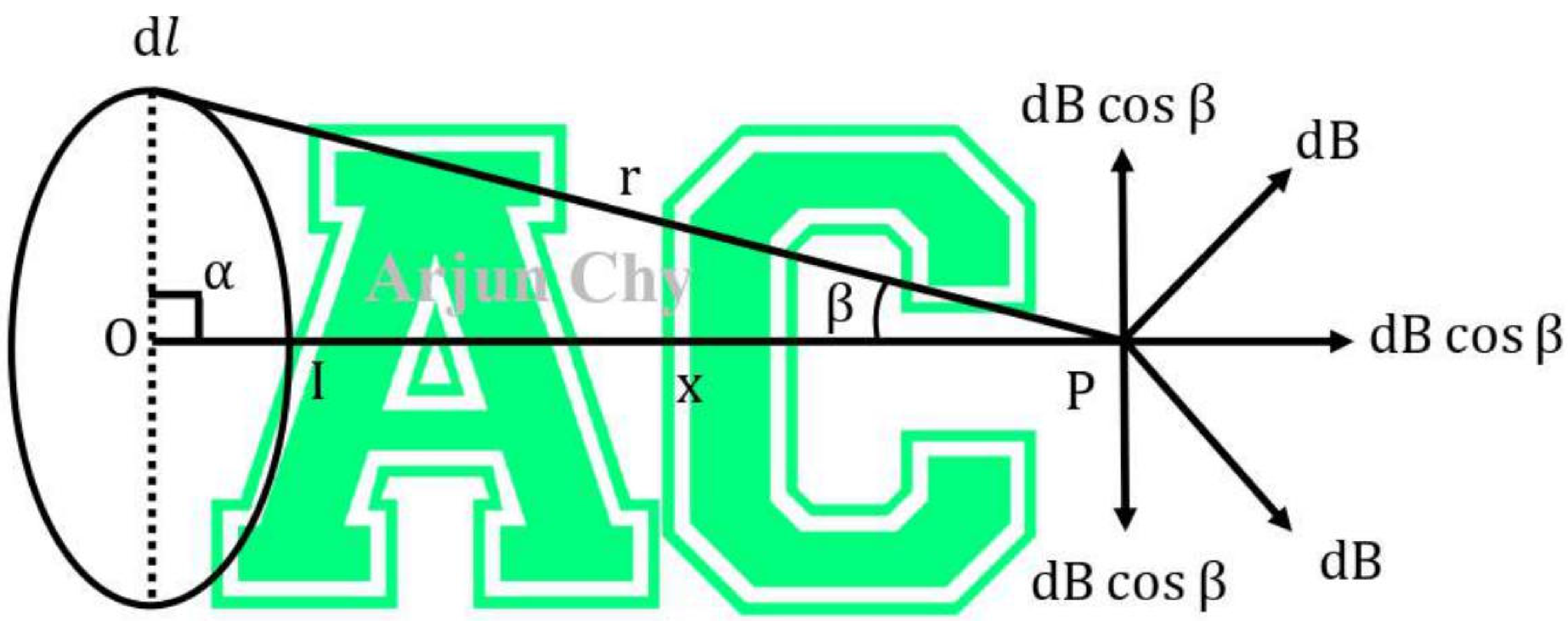

- Let a circular coil of radius 'a' in which appoint 'P' lies on its axis at distance 'x' from its centre. If current 'I' is the flowing on the coil and consider an element d*l* of the coil at right angles to the plane of the paper. Then, the element d*l* gives field dB at 'P' perpendicular to 'r' along the plane of the paper. If β is the angle between 'r' and axis of the coil, then the field dB has components dB sin β along the axis and dB cos β at right angle to the axis.

Again, consider a small element d*l* opposite to d*l* and resolved dB into two components dB cos β and dB sin β as shown in the figure.

**Download from www.arjun00.com.np

The component dB cos β cancel each other and similar cancellation takes place for all similar elements around the circumference of the coil. The effective field at 'P' is due to dB sin β component.

$$\text{Total field (B)} = \int \text{dB} \sin \beta$$

According to Biot Savart law, due to small element of length dl is given by;

www.arjun00.com.np

$$\text{dB} = \frac{\mu_0 \text{Id}l \sin\alpha}{4\pi r^2} = \frac{\mu_0 \text{Id}l}{4\pi r^2} \qquad [\because \alpha = 90°]$$

The field 'B' at 'P' due to a coil is given by;

$$(\text{B}) = \int \frac{\mu_0 \text{Id}l}{4\pi r^2} \sin\beta$$

For the length circular coil the length increases from zero to the circumference of the coil *i. e.*, 2πa.

$$\text{B} = \frac{\mu_0 \text{I} \sin\beta}{4\pi r^2} \int_0^{2\pi a} \text{d}l = \frac{\mu_0 \text{I} \sin\beta}{4\pi r^2} [l]_0^{2\pi a} = \frac{\mu_0 \text{I} \sin\beta}{4\pi r^2} [2\pi a] = \frac{\mu_0 \text{Ia} \sin\beta}{2r^2}$$

If 'N' be number of coils then,

$$\text{B} = \frac{\text{N}\mu_0 \text{Ia} \sin\beta}{2r^2}$$

Again; we have,

$$r^2 = x^2 + a^2$$

Then,

$$\text{B} = \frac{\text{N}\mu_0 \text{Ia}\left(\frac{a}{r}\right)}{2(x^2 + a^2)}$$

**Download from www.arjun00.com.np

$$= \frac{N\mu_0 I a^2}{2(x^2+a^2)(x^2+a^2)^{\frac{1}{2}}}$$

$$B = \frac{N\mu_0 I a^2}{2(x^2+a^2)^{\frac{3}{2}}}$$

So, $\mathbf{B = \frac{N\mu_0 I\, a^2}{2(x^2+a^2)^{\frac{3}{2}}}}$**, which is the required Expreesion.**

For checking:

$$\boldsymbol{When\ x = 0\ i,e\ at\ center}\quad \mathbf{B_{Center} = \frac{N\mu_0 I\, a^2}{2(0+a^2)^{\frac{3}{2}}} = \frac{\mu_0 N\, I}{2a}}$$

www.arjun00.com.np

4) What is interference of light? Derive the expression for the width of interference fringe in young's double slit experiment.

- **Interference of light** is the phenomenon of non-uniform distribution of light energy in a medium due to superposition of light waves from two coherent sources.

There are *two types of interference*:- Constructive interference and destructive interference.

Young's double slit experiment

Suppose S_1 and S_2 be two fine slits at a small distance d apart as in Figure. Let the slits be illuminated by monochromatic light from a strong source S of wavelength λ and MN is a screen at a distance D from the double slits. The two waves starting from S_1 and S_2 superimpose upon each other resulting an interference pattern on the screen placed parallel to the double slit as shown in figure.

**Download from www.arjun00.com.np

Let O be the centre between the slits S_1 and S_2 . Draw S_1P, S_2P and OC perpendicular to MN. The intensity of light at a point on the screen will depend upon the path difference between the two waves arriving at that point. The point C on the screen lies on the perpendicular bisector of Si and Sa, and so it is at equal distance from S_1 and S_2. Therefore, the path difference between two waves reaching C is zero and hence, they are in phase. So, the point C is the position of maximum intensity. It is called central maximum.

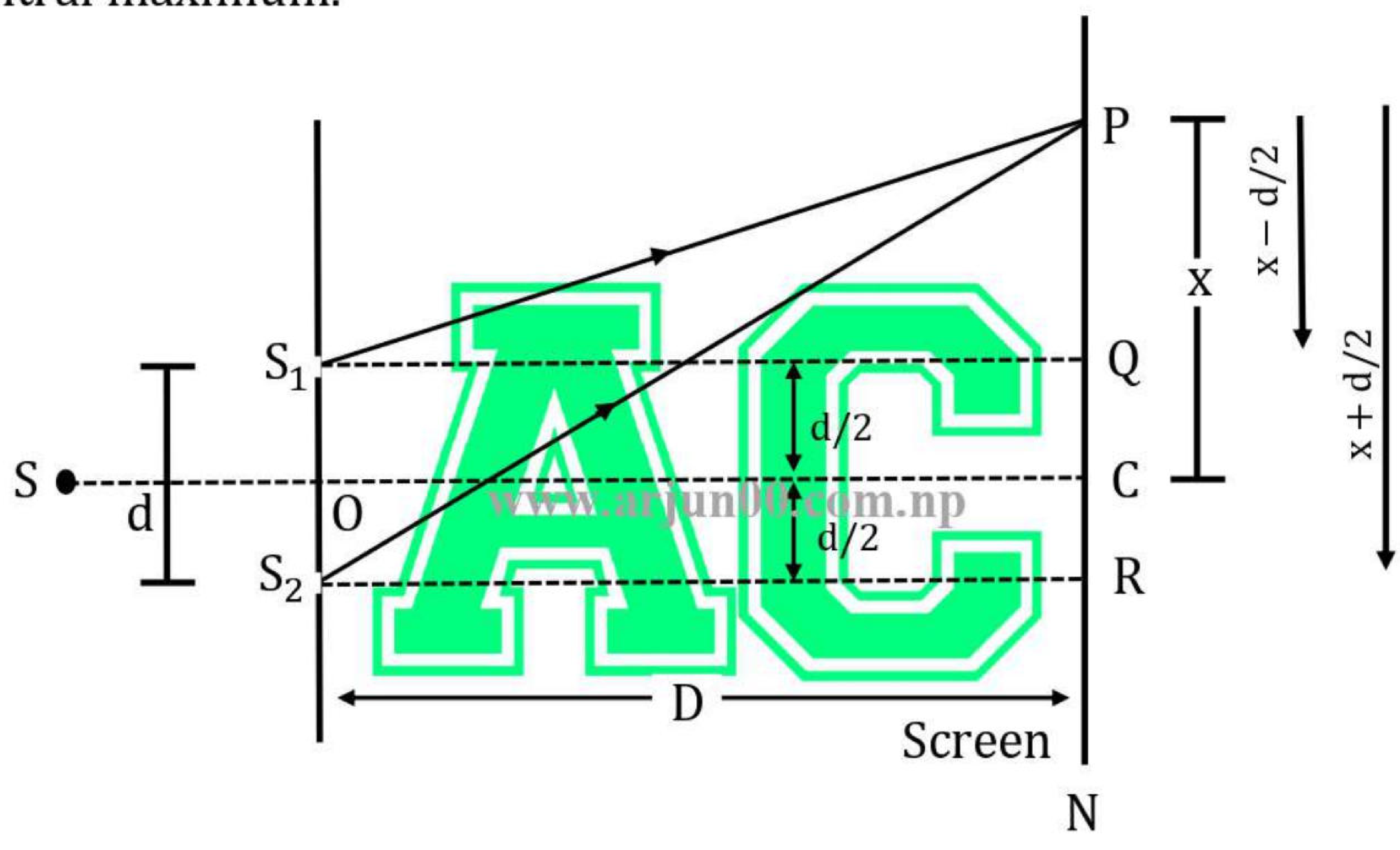

Consider a point P at a distance x from C. The path difference between two waves arriving at P is given by

$$\text{Path difference} = S_2P - S_1P$$

From Fig. (a), it can be found that, $PQ = x - \frac{d}{2}$; $PR = x + \frac{d}{2}$

And $(S_2P)^2 - (S_1P)^2 = \left[D^2 + \left(x + \frac{d}{2}\right)^2\right] - \left[D^2 + \left(x - \frac{d}{2}\right)^2\right]$

**Download from www.arjun00.com.np

$$= \left(x + \frac{d}{2}\right)^2 - \left(x - \frac{d}{2}\right)^2$$

$or,\quad (S_2P - S_1P)(S_2P + S_1P) = 2\,xd$

$or,\quad (S_2P - S_1P) = \dfrac{2\,xd}{S_2P + S_1P}$

In practice, point P lies very close to C. So ,$\mathbf{S_2P \approx S_1P \approx D}$

$$S_2P + S_1P = D + D = 2D$$

www.arjun00.com.np

Path difference $= S_2P - S_1P = \frac{2\,xd}{2D} = \frac{x.d}{D}$

The phase difference for this path difference is given by

Phase difference, $\phi = \frac{2\pi}{\lambda} \times$ **path difference** $= \frac{2\pi}{\lambda}\left(\frac{x.\,d}{D}\right)$

Bright fringes (Constructive Interference): If the path difference is an integral **multiple of wavelength λ**, then Point P is bright. Therefore, for bright fringes

$$\frac{xd}{D} = n\,\lambda$$

or, $x = n\,\lambda\,\frac{D}{d}$ $\cdots\cdots\cdots$ (i) where n = 0, 1, 2, 3 ....

The distance between any two consecutive bright fringes is called fringe width, denoted by β.

Fringe width, $\beta = x_{n+1} - x_n = \dfrac{(n+1)\,\lambda\,D}{d} - \dfrac{n\,\lambda\,D}{d} = \dfrac{\lambda\,D}{d}$

$\therefore$ $\boldsymbol{Fringe\ Width, \beta = \dfrac{\lambda\,D}{d}}$

**Download from www.arjun00.com.np

Similarly, **Dark fringes (Destructive Interference):** If the path difference is an **odd integral multiple of half wavelength λ**, then Point P is Dark. Therefore, for Dark fringes

$$\frac{xd}{D} = (2n-1)\frac{\lambda}{2}$$

or, $\mathbf{x = (2n-1)\ \lambda \frac{D}{2d}}$ $\cdots\cdots\cdots$ (i) where n = 1, 2, 3 ....

The distance between any two consecutive dark fringes is called fringe width, denoted by β.

Fringe width, $\beta = x_{n+1} - x_n = \frac{(2(n+1)-1)\lambda D}{2d} - \frac{(2n-1)\lambda D}{2d}$

$$= \frac{[2n+2-1-2n+1\ ]\lambda D}{2d} = \frac{2\,.\lambda D}{2d} = \frac{\lambda D}{d}$$

$\therefore$ ***Hence, Fringe Width,*** $\boldsymbol{\beta = \frac{\lambda D}{d}}$ $\cdots\cdots\cdots$ (ii)

Hence, From (i) and (ii) , It is clear that width of Bright and Dark fringe are same ,regardless of the order of fringes.

www.arjun00.com.np

5) Define specific charge of an electron. Explain how can you determine the specific charge by Thomson's method.

- The specific charge of a particle is the ratio of charge to its mass. For electron specific charge $\frac{e}{m} = 1.76 \times 10^{11}\ C\ kg^{-1}$.

Principle: If a beam of electrons is subjected to electric and magnetic fields it experiences forces. By adjusting the magnitude and direction of the two fields, the net force on the electron is made zero.

**Download from www.arjun00.com.np

Determine the specific charge by Thomson's method.

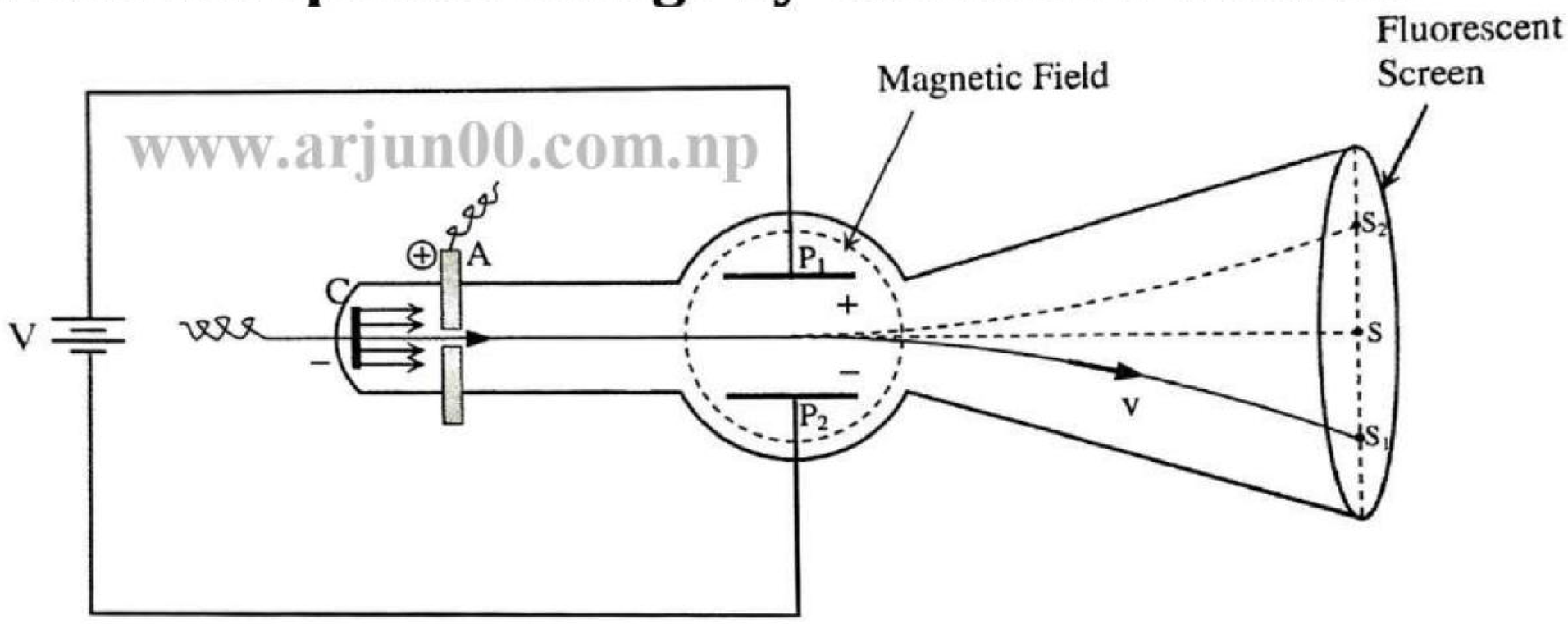

Figure – Thomson's experiment for determination of e/m.

- Modern Version of the Thomson's apparatus is shown in Figure. The apparatus consists of a cathode C and anode A are enclosed in an evacuated discharge tube. When a high potential difference is applied between cathode and anode, a narrow beam of cathode rays emerges out from a small hole in the anode and passes between two parallel plates P_1 and P_2. A uniform electric field is applied between the plates P_1 and P_2 and the electrons will be deflected upwards (*i.e.* towards point S_2) in the plane of paper. On the other hand, a uniform magnetic field is also applied in this region between the plates as shown by dotted circle perpendicular to the plane of the paper and in inward direction. The magnetic field will deflect the electrons downwards and hit the screen at point S_1.

Theory

- If the uniform magnetic field is applied, then force on electron due to magnetic field,

$$F_B = Bev$$

Where e is the changes on an electron, B is the magnetic field strength and v is the velocity of the electron.

**Download from www.arjun00.com.np

The magnetic of electric force is balanced by magnitude of force due to magnetic field

$$i.e\ \ F_E = F_B$$

$$eE = Bev$$

$$\Rightarrow \frac{E}{B} = v$$

The force F_B is always normal to the path of the electron beam and therefore it makes to move the electron along the circular path.

www.arjun00.com.np

Hence, the force on electron due to magnetic field is balanced by the centripetal force and therefore,

$$Bev = \frac{m\,v^2}{r}$$

$$\text{or,}\quad \frac{e}{m} = \frac{v}{rB}$$

$$\frac{e}{m} = \frac{v}{rB}$$

Hence, Knowing the value of r, B, v , we get the specific charge $\frac{e}{m}$

6) Define rectifier. Explain the working of full wave rectifier.

- Rectification is the process in which ac is converted into dc. The device which is used for rectification is called a ***rectifier***.

Full wave rectifier

- The circuit diagram of the full wave rectifier is shown in the figure. It consists of a transformer with center tapped secondary coil.

**Download from www.arjun00.com.np

Two diodes D_1 and D_2 are connected at the upper and lower ends of the secondary coil of the transformer respectively. The center tap of the transformer and a common point of the n-region of diodes are connected to the load resistance from which output is taken.

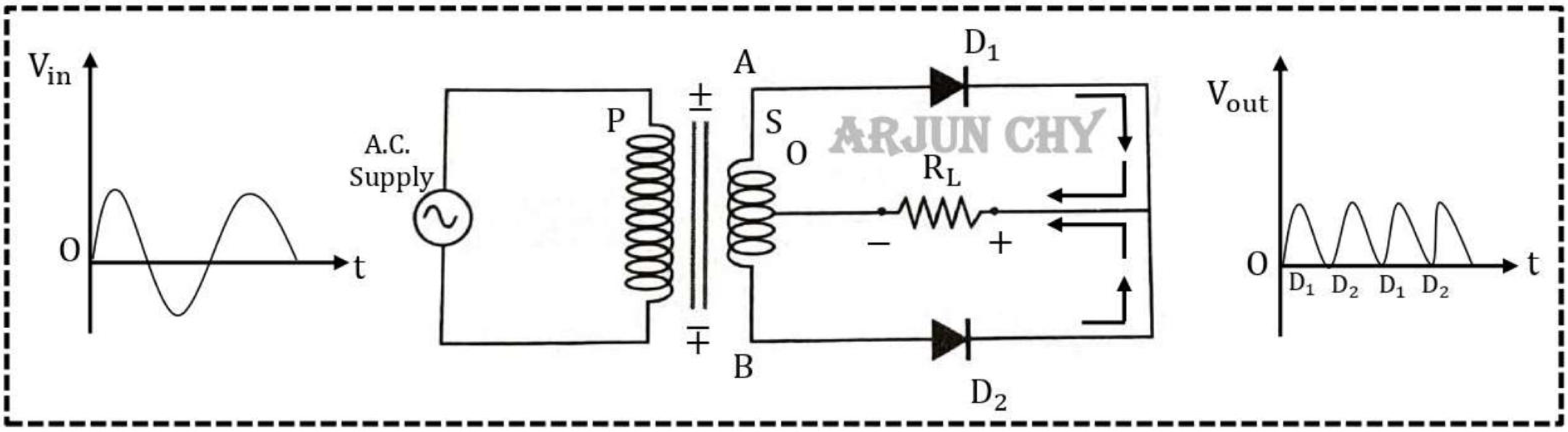

During the positive half cycle, the **upper diode D_1** is forward biased and the **lower diode D_2 is reverse-biased**. Thus, the **current flows through the diode D_1** and load resistor R_L.

During the negative half cycle ,the **upper diode D_1** is **reverse biased** and the **lower diode D_2 forward biased. Thus, current flows through D_2** and the load resistor R_L.

Figure shows the output voltage obtained at the load resistor R_L in both half cycle. The current flows through R_L for both half cycle of the input voltage. The voltage through the resistor R_L is in the same direction in both cases. Thus, the output current through the load is said to be unidirectional current. We can consider that a **full-wave rectifier is like two back to back half wave rectifiers with one rectifier working in the first half cycle and the other working in the alternate half cycle.**

**Download from www.arjun00.com.np

7) Define work function and derive Einstein's photoelectric equation.

- Let ϕ be the energy used up in liberating the electrons from the metal surface and $\frac{1}{2}mv^2$ is the K.E. of the photoelectron. This **minimum energy needed to liberate** the electron from the surface is called the work function. Therefore,

  Work function = Energy of the Photon − K.E. of the electron

Einstein's photoelectric equation

- According to Plank's quantum theory of radiation, the energy associated with each photon of light of frequency 'f' is given by;

$$E = hf$$

where, 'h' is the Plank's constant.

www.arjun00.com.np

When a photon of energy hf is incident on a metal surface,

a) A part of energy is used to knock out an electron from its atom. The minimum energy required just to liberate an electron from the surface of metal without imparting any kinetic energy to it is called work function 'ϕ' of the metal.

b) The rest of the energy is used in providing the kinetic energy to eject photoelectronE_k. If 'm' is the mass and 'v' is the velocity of the photoelectron after the emission, them the kinetic energy of the electron is given by;

$$E_k = \frac{1}{2}mv^2 \qquad \cdots\cdots (i)$$

Thus,

**Download from www.arjun00.com.np

$$hf = \phi + E_k$$

$$\therefore\ hf = \phi + \frac{1}{2}mv^2 \qquad \cdots\cdots (ii)$$

This equation is known as Einstein photoelectric equation.

If f_0 be the threshold frequency of light for a given metal, then the work function ϕ becomes;

$$\phi = hf_0$$

Thus, the equation (i) can be written as,

$$\frac{1}{2}mv^2 = h(f - f_0) \qquad \cdots\cdots (iii)$$

If λ and λ_0 be the wavelength of incident, photon and wavelength corresponding to the threshold frequency respectively, then,

$$f = \frac{c}{\lambda} \text{ and, } f_0 = \frac{c}{\lambda_0}$$

www.arjun00.com.np

where, 'c' is the velocity of light in vacuum.

Hence,

$$\frac{1}{2}mv^2 = hc\left(\frac{1}{\lambda} - \frac{1}{\lambda_0}\right)$$

This is another form of Einstein's photoelectric equation.

8) Define capacitor. Derive capacitance of a parallel plate capacitor.

- An electronic device which is used to store the energy in the form of charge is called ***capacitor***. It is a passive electronic component with two terminals.

**Download from www.arjun00.com.np

Parallel plate capacitor

- Two metal plates are placed parallel to each other separated by dielectric material forms a parallel plate capacitor.

Let two parallel plates having area 'A', each separated by 'd' forms a parallel plate capacitor. If 'Q' charge is given on upper plate and surface density of the charged plate is, σ then,

$$\text{Charge density } (\sigma) = \frac{Q}{A} \qquad \cdots\cdots\cdots (i)$$

$$E = \frac{\sigma}{\varepsilon_0} \qquad \cdots\cdots\cdots (ii)$$

From equations (i) and (ii); we get,

$$E = \frac{Q}{A\varepsilon_0} \qquad \cdots\cdots\cdots (iii)$$

If 'V' is the potential difference between the plates; then,

$$E = \frac{V}{d} \qquad \cdots\cdots\cdots (iv)$$

Now, equation (iii) and (iv); we get,

$$\frac{V}{d} = \frac{Q}{A\varepsilon_0}$$

$$or, \quad \frac{Q}{V} = \frac{\varepsilon_0 A}{d}$$

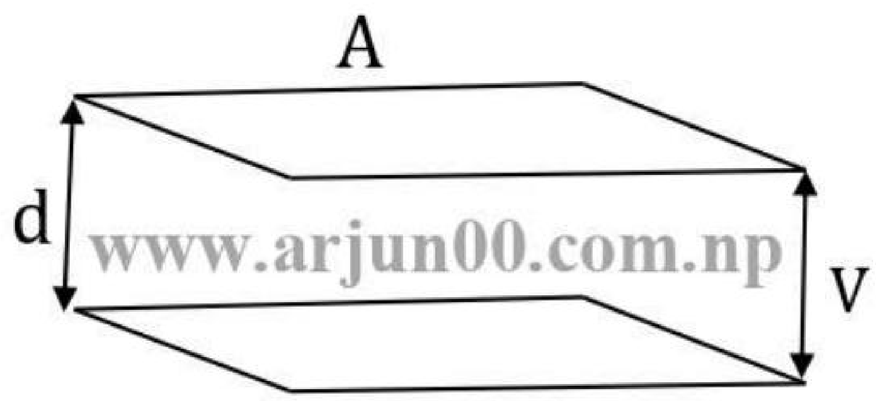

www.arjun00.com.np

$$i.e, \quad C = \frac{\varepsilon_0 A}{d} \qquad \left[\because \text{Capacitance}(C) = \frac{Q}{V}\right]$$

Hence, the capacitance of parallel plate capacitor is $\frac{\varepsilon_0 A}{d}$.

**Download from www.arjun00.com.np

9) Derive Newton's formula for velocity of sound in air.

- Newton assumed that when sound waves propagate through gas, compression and rarefaction are produced in the medium. The changes of these compressions and rarefaction takes place at a slow rate. Hence, the process is isothermal. The equation of state for isothermal change is given by;

$$PV = K\,(\text{Constant}) \qquad \cdots\cdots (i)$$

Where, 'P' is pressure of the gas and 'V' is its volume.
On differentiating equation (i) ; we obtain,

$$P\,dV + V\,dP = 0$$

$$or, \quad P = -\frac{dP}{\frac{dV}{V}} = \frac{\text{stress}}{\text{strain}} = E$$

Negative sign indicates that as the pressure increases the volume decreases and vice-versa. 'E' is isothermal bulk modulus of elasticity.

$$\therefore \text{Velocity of sound in gas}(v) = \sqrt{\frac{E}{\rho}} = \sqrt{\frac{P}{\rho}}$$

This is Newton's formula.
For air at N.T.P.; we have,

$$P = 1.013 \times 10^5\ Nm^{-2} \text{ and, } \rho = 1.293\ kgm^{-3}$$

$$\therefore \mathbf{v} = \sqrt{\frac{P}{\rho}} = \sqrt{\frac{1.013\times10^5}{1.293}} = \mathbf{280\ ms^{-1}}$$

However, the velocity of sound in air at NTP is found experimentally as 332 m/s which is quite greater than the value calculated above. Such difference in values shows that there are discrepancies in Newton's assumption and it needs correction.

www.arjun00.com.np

**Download from www.arjun00.com.np

10) State Faraday law's of electromagnetic induction. What is Lenz's law?

➢ **Statement:**

- When the magnetic flux linking a coil changes, an e.m.f. is induced in it.
- This induced e.m.f. lasts so long as the change in magnetic flux continues.
- The induced e.m.f. in the coil is directly proportional to the rate of change of flux linkages.

www.arjun00.com.np

$i.e.$ If the magnetic flux linking a coil changes from ϕ_1 to ϕ_2 and induced e.m.f. in it is ε, Faraday's law of electromagnetic induction Induced e.m.f. ∝ rate of change of flux linkages.

$$\varepsilon \propto \frac{\phi_2 - \phi_1}{t}$$

$$\varepsilon = -k\,\frac{d\emptyset}{t}$$

AC

Where, K is proportionality constant and $(-)$***ve* sign** due to lenz's law, i.e The direction of induced current is such that It oppose the cause which produced it

Induced e.m.f for N number of turns of Coils,

$$\boldsymbol{\varepsilon = -N\frac{d\phi}{dt}}$$

➢ It states that the direction of induced current is always such that it opposes the change or cause which produces it. It is used to find out the direction of current due to induced e.m.f.

**Download from www.arjun00.com.np

11) Differentiate between nuclear fission and fusion section.

Fission	Fusion
Fission involves breaking up of a heavy nucleus into lighter nuclei.	Fusion involves combining of two lighter nuclei into a heavy nucleus.
Energy released per fission is about 200 MeV.	Energy released per fusion is about 24 MeV.
Energy released per nucleons ≈ 0.8 MeV.	Energy released per nucleon ≈ 6 MeV.
No restriction for temperature.	High temperature and pressure is needed.
Produces radiation.	Produces no radiation.
Nuclear reactor is based on controlled fission chain reaction.	No controlled fusion discovered so far (yet to be realised).
Uncontrolled chain reaction result atom bomb.	Uncontrolled fusion reaction result H-bombs. It is about 1000 times powerful than atom bomb.
For fission chain reaction critical mass is needed.	No limitation of critical mass/size of the fusible material.
The sources (fuel) fission is limited.	Almost unlimited source.
It is single stage reaction.	It is multistage reaction.
Fuel is either in solid or liquid state	Fuel is in plasma state.
Fuel can be stored for any length of time.	Fuel can not be stored as no container is available for such high temperature.
Fission is induced by neutrons.	Fusion is induced by protons.
Example: $_{0}n^{1} + _{92}U^{235} \rightarrow _{56}Ba^{141} + _{36}kr^{92} + 3_{0}n^{1} + \text{Energy}$	Example: $_{1}H^{2} + _{1}H^{2} = _{2}H^{4} + \text{Energy}.$

www.arjun00.com.np

**Download from www.arjun00.com.np

12) How a galvanometer is converted into Ammeter.

➢ To convert galvanometer into ammeter

A galvanometer is converted to an ammeter by connecting a suitable low resistance across the galvanometer. The low resistance used for the purpose is called shunt resistance. Let 'S' be the shunt resistance.

Let, Galvanometer resistance = G

Current on galvanometer = I_g

Current on shunt = I_S

Shunt resistance = S

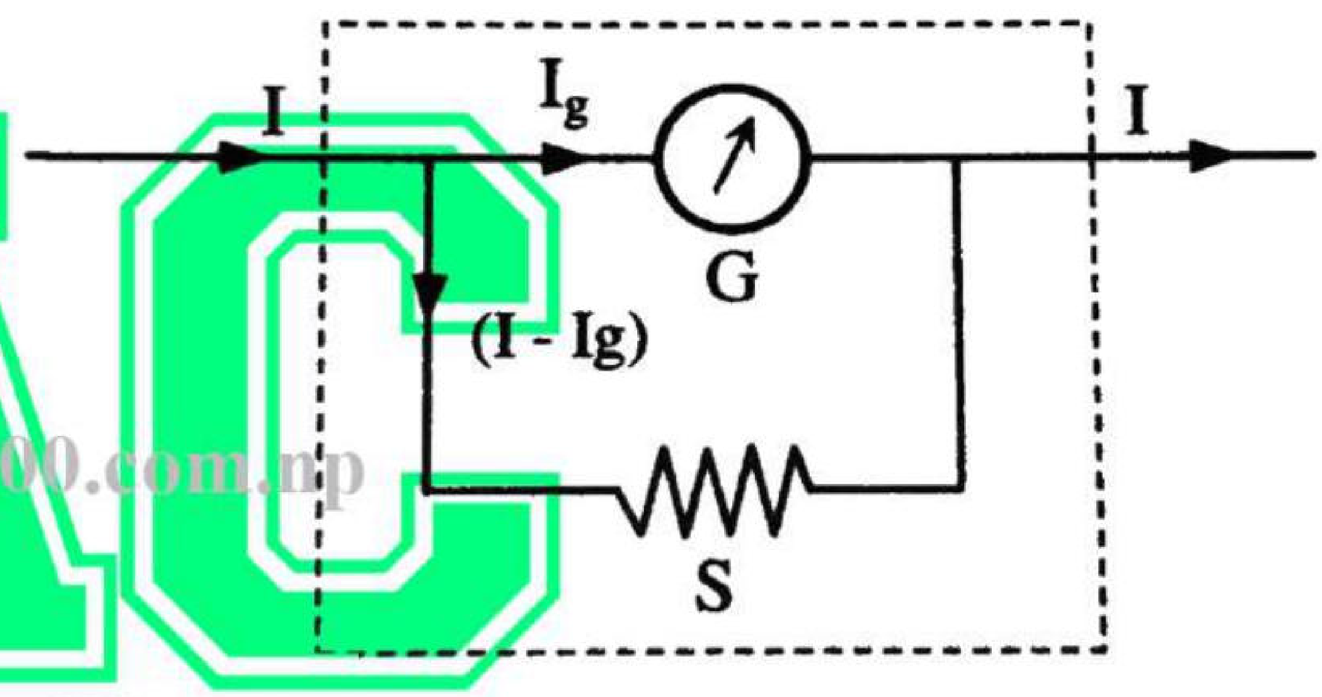

www.arjun00.com.np

Then, form the figure;

p.d across 'S' = p.d. across 'G'

$$I_S S = I_g G$$

$$\text{or, } S = \frac{I_g G}{I_S} = \frac{I_g G}{I - I_g} \qquad [\because\ I_S = I - I_g]$$

By choosing suitable shunt resistance, galvanometer is converted to ammeter of range (0 - I) Amperes.

**Download from www.arjun00.com.np

13) The critical angle of light in a certain substance is 45° What is the polarizing angle?

➢ **Solution**

Given that;

Critical angle (C) = 45°

Polarizing angle (ϕ) =?

From Brewster's law; we have,

$\mu = \tan\phi$; where i_P is polarizing angle.

www.arjun00.com.np

or, $\frac{1}{\sin C} = \tan\phi$; where C is the critical angle.

or, $\frac{1}{\sin 45°} = \tan\phi$

or, $\sqrt{2} = \tan\phi$

or, $\phi = \tan^{-1}(1.414)$

$= \mathbf{54.73°}$

Hence, Polarizing angle is 54.73°.

14) At what temperature, velocity of sound is 2/3 of velocity of sound at 127°c?

➢ **Solution**

Given that;

Temperature $(T_1) = 127 + 273 = 400k$

We have,

Velocity of sound (V) $\propto \sqrt{T}$

**Download from www.arjun00.com.np

Let T_1 be the temperature at which the velocity of sound is $\frac{2}{3}$ of velocity of sound at 127°C.

Now,

$$\frac{V_2}{V_1} = \frac{\sqrt{T_2}}{\sqrt{T_1}}$$

$$or, \quad \frac{2V}{3V} = \frac{\sqrt{T_2}}{\sqrt{400}}$$

$$or, \quad T_2 = \frac{4}{9} \times 400$$

$$T_2 = 177.78\ K$$

$\therefore$ **$T_2 = 177.78$ K at which velcity of sound is $\frac{2}{3}$ of velocity at 127° C**

www.arjun00.com.np

15) A cell of emf 1.5 V and internal resistance 1Ω sends a current through wire of resistance 6 Ω and 12 Ω in parallel. Find the current flowing through each wire.

➢ **Solution**

Given that;

E.m.f of cell (E) = 1.5 V

Internal resistance (r) = 1Ω

The resistance 6 Ω and 12 Ω are connected in parallel as shown in figure .

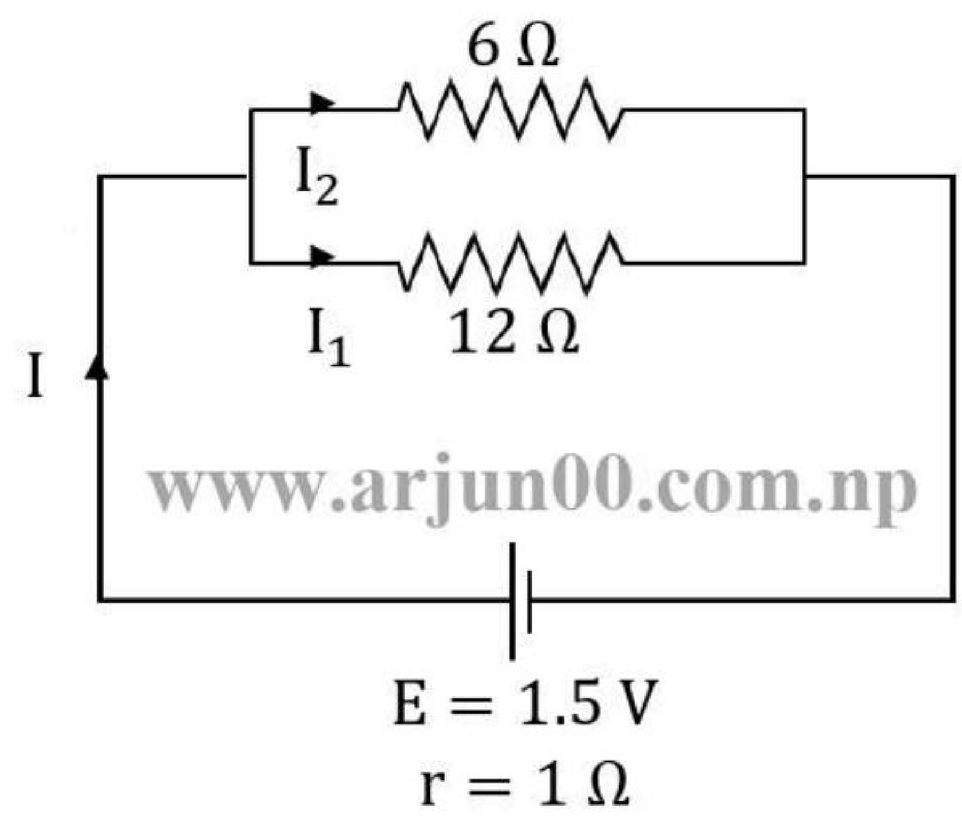

www.arjun00.com.np

**Download from www.arjun00.com.np

The effective resistance of 6 Ω and 12 Ω are in parallel is given by;

$$R_{eq} = \frac{R_1 R_2}{R_1 + R_2} = \frac{6 \times 12}{6 + 12} = \mathbf{4\ \Omega}$$

Now,

Total current flowing throught circuit (I) $= \frac{E}{R_{eq} + r} = \frac{1.5}{4 + 1} = \mathbf{0.3\ A}$

But, in the parallel combination;

P.d. across 6 Ω = P.d. across 12 Ω

or, $I_2 \times 6 = I_1 \times 12$

or, $\frac{I_1}{I_2} = \frac{6}{12} = \frac{1}{2}$

$\therefore \quad \mathbf{I_2 = 2I_1}$

www.arjun00.com.np

But, Total current (I) $= I_1 + I_2$

or, $0.3 = I_1 + I_2$

or, $I_1 = \mathbf{0.1\ A}$

and, $I_2 = 2I_1 = 2 \times 0.1 = \mathbf{0.2A}$

Hence, the current through 6 Ω wire and 12 Ω wire are 0.1 A and 0.2 A respectively.

**Download from www.arjun00.com.np

16) What is the impedance of a series combinations of a resistance of 1kΩ and a capacitance of a capacitor 2μF at a frequency of 50Hz ?

➢ **Solution**

Given that;

$$\text{Resistance (R)} = 1\ \text{k}\Omega = 1000\ \Omega$$
$$\text{Frequency (F)} = 50\text{Hz}$$
$$\text{Capacitance of a capacitor (C)} = 2\mu\text{F} = 2 \times 10^{-6}\ \text{F}$$

Now,

$$X_C = \frac{1}{2\pi FC}$$

www.arjun00.com.np

$$X_C = \frac{1}{2\pi \times 50 \times 2 \times 10^{-6}}$$

$$X_C = \mathbf{1.59 \times 10^3\ \Omega}$$

and,

$$\text{Impedance (Z)} = \sqrt{R^2 + X_C^2}$$

$$= \sqrt{(1000)^2 + (1.59 \times 10^3)^2}$$

$$= \mathbf{1.87 \times 10^3\ \Omega}$$

17) The activity of radium decreases about 10% every 20 years. Calculate its half life.

➢ **Solution**

Given that;

$$\text{Activity (A)} = (100 - 10)\%\ \text{of}\ A_0 = 0.9\ A_0$$
$$\text{Time (t)} = 20\ \text{years}$$

**Download from www.arjun00.com.np

We have,

$$A = A_0 e^{-\lambda t}$$

or, $0.9\ A_0 = A_0 e^{-\lambda t}$

or, $0.9 = e^{-\lambda t}$

or, $ln\left(\frac{1}{0.9}\right) = \lambda t$

$$\therefore \quad \lambda = \frac{ln\left(\frac{1}{0.9}\right)}{20}$$

$\therefore$ Half life of radium $\left(T_{\frac{1}{2}}\right) = \frac{0.693}{\lambda}$

$$= \frac{0.693}{ln\left(\frac{1}{0.9}\right)} \times 20$$

$$= \mathbf{131.57\ year}$$

www.arjun00.com.np

18) Calculate the velocity of sound in air if two waves of wavelengths per second. 0.5mm and 0.505m produce 5 beats.

- **Solution**

Given that;

Number of beats per second = 5

Wavelength of first wave (λ_1) = 0.5m

Wavelength of second wave (λ_2)= 0.505m

Frequency of first wave = f_1

Frequency of second wave = f_2

**Download from www.arjun00.com.np

Let, 'V' be the velocity of sound in air.

$$f_1 - f_2 = \text{Beats per second} = 5 \quad \cdots\cdots\cdots (i)$$

$$f_1 = \frac{V}{\lambda_1} = \frac{V}{0.5} \quad \text{and,} \quad f_2 = \frac{V}{\lambda_1} = \frac{V}{0.505}$$

www.arjun00.com.np

Now, substituting the values of f_1 and f_2 in equation (i); we get,

$$\frac{V}{0.5} - \frac{V}{0.505} = 5$$

or, $$V\left(\frac{1}{0.5} - \frac{1}{0.505}\right) = 5$$

$\therefore$ $\mathbf{V = 250\ m/sec.}$

19) A wire of length 150cm and area of cross sectional $1mm^2$ is stretched by a weight of 3kg. Determine increase in length. Young's modulus of material of wire is $2 \times 10^{11}\ N/m^{22}$, $g = 9.8m/s^2$.

➢ **Solution**

Given that;

Length $(l) = 150$ cm $= 1.5$m

Area (A) $= 1\ mm^2 = 1 \times 10^{-6}$ m

Mass (m) $= 3$ kg

Young's modulus (Y) $= 2 \times 10^{11}\ Nm^{-2}$

$g = 9.8\ m/s^2$

**Download from www.arjun00.com.np

Let Δl be the small increase in the length of the wire. Then,

$$(Y) = \frac{\text{Stress}}{\text{Strain}} = \frac{\frac{F}{A}}{\frac{\Delta l}{l}}$$

$$= \frac{Fl}{A\Delta l} \qquad [\because F = mg]$$

$$or, \qquad \Delta l = \frac{mgl}{2AY}$$

www.arjun00.com.np

[divided by 2 for the length of wire is taken to centre of mass only]

$$or, \qquad \Delta l = \frac{3 \times 9.8 \times 1.5}{2 \times 10^{-6} \times 2 \times 10^{11}}$$

$$\Delta l = 0.00011 \text{ m}$$

$\therefore$ Increase in the length (Δl) = **0.11 mm**

20) Calculate the binding energy per nucleon for a helium nucleus. Give that
mass of helium nucleus = 4.001509 amu
mass of proton = 1.007277 amu
mass of neutron = 1.008666 amu

➢ **Solution**

Given that;

Mass of nucleus $M(2He^4) = 4.001509$ amu
Mass of proton $(m_p) = 1.007277$ amu
Mass of neuron $(m_n) = 1.008666$ amu
1amu = 931MeV

**Download from www.arjun00.com.np

Binding energy per nucleon $(\overline{BE}) = ?$

Now, Mass defects $\Delta m = [(2\,m_p + 2\,m_n) - M]$

$= [2(1.007277 + 1.008666) - 4.001509]$

www.arjun00.com.np

$= \mathbf{0.030377\ amu}$

Binding Energy (B.E.) $= 0.030377 \times 931\text{MeV} = \mathbf{28.28\ MeV}$

Binding Energy per nucleon $(\overline{BE}) = \frac{BE}{A} = \frac{28.28}{4} = \mathbf{7.07\ MeV}$

Hence, the binding energy per nucleon for a Helium nucleus is 7.07 MeV.

-The End-

** "If you find a mistake in Question/Answer, Kindly take a Screenshot and email to info@arjun00.com.np "

**This Solution is for Educational Purpose Only. If you misuse it, we are not Responsible.

Support us

A Small gift will help maintain this website. →

Feel Free to Read at no cost.

Support us on: fonepay

you can donate as you wish.

ARJUN CHAUDHARY

2222120014283943

Copyright © belongs to the Arjun Chy

**Download from www.arjun00.com.np

Engineering Physics –II__(Engg. All) 2nd Sem

(2080 New) Question Solution.

Compile & Written by © Arjun Chy

Website :- www.arjun00.com.np

Facebook :-www.facebook.com/Arjun00.com.np

1) Define equipotential surfaces. Derive an expression for electric potential at a point due to an electric charge.

- Equipotential surfaces in an electric field are defined as the surfaces over which the electric potential has same value.

- *See the Solution of 2080 (old) of Q.no 2 on Page no. 102*

2) State Biot-Savart's law. Use this law to find the magnetic field at a point on the axis of current carrying circular coil.

- *See the Solution of 2080 (old) of Q.no 3 on Page no. 103*

3) State Bohr's postulates of hydrogen atom. Derive an expression for the energy of electron in the nth orbit of hydrogen atom.

- *See the Solution of 2077 R/B of Q.no 4 on Page no. 9*

**Download from www.arjun00.com.np

4) Define beat and beat frequency. Derive an expression for beat frequency.

- The periodic variation in the intensity of sound at a point, due to the superposition of two sound waves of slightly different frequencies travelling in the same direction, is called **beats**.
- The time interval in which one beat occurs is called beat period, while the number of beats per second is called **beat frequency.**

Derivation for Beat Frequency

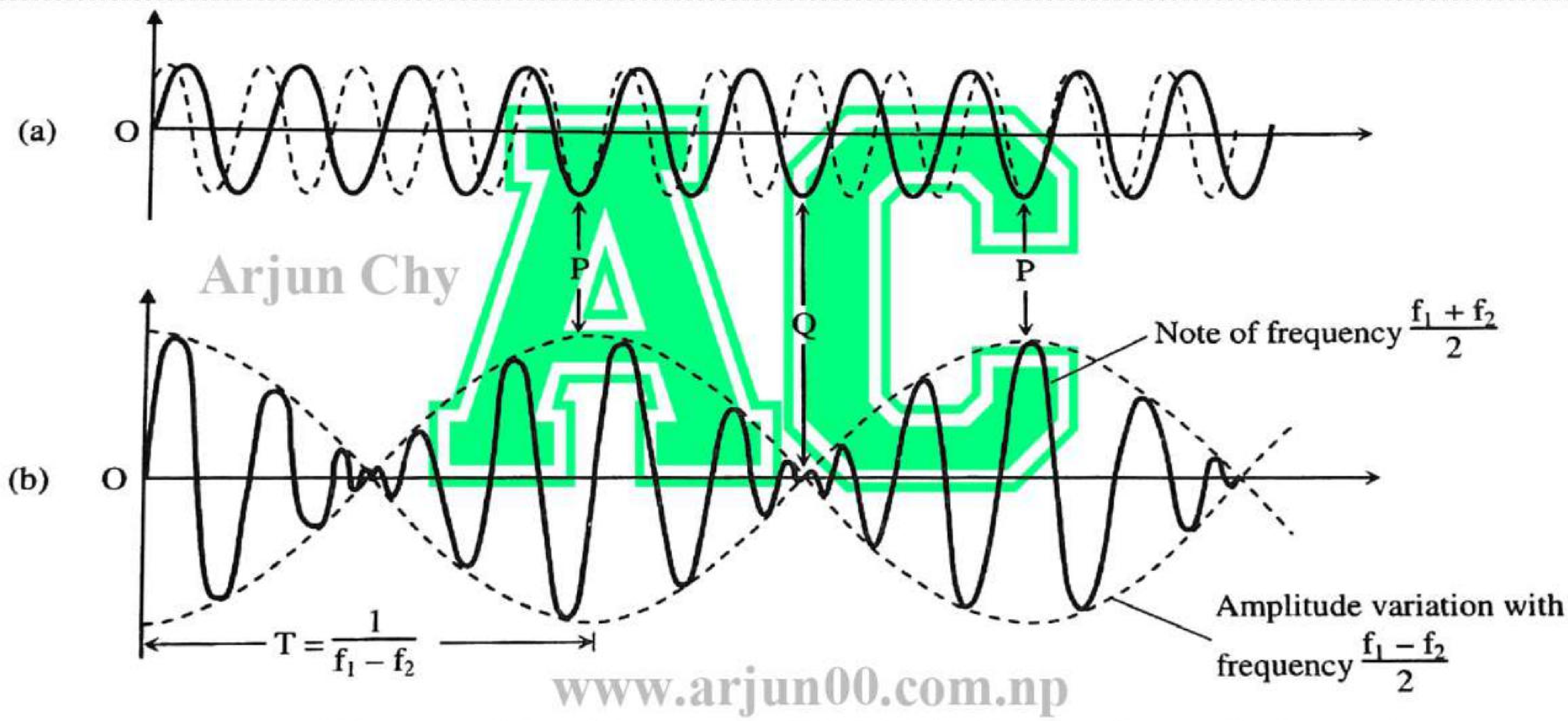

Figure – (a) Superposition of two waves with slightly different frequencies f_1 and f_2.
(b) Graphical representation of beat.

***This image is For Understanding only , Not necessary to draw in exam**

- Let us consider two sound waves, having same amplitude '**a**' and slightly difference frequency $\mathbf{f_1}$ and $\mathbf{f_2}$ having angular frequency $\boldsymbol{\omega}_1$ and $\boldsymbol{\omega}_2$ Respectively. Suppose they Arrive in phase at some point x of medium Then,

**Download from www.arjun00.com.np

The displacement due to each waves at any instant is

$$y_1 = a \sin(\omega_1 t - k_1 x) \quad \cdots\cdots\cdots (i)$$

$$y_2 = a \sin(\omega_2 t - k_2 x) \quad \cdots\cdots\cdots (ii)$$

When two waves superpose at $\boldsymbol{x} = \mathbf{0}$, then

$$y_1 = a \sin \omega_1 t \quad \cdots\cdots\cdots (iii)$$

$$y_2 = a \sin \omega_2 t \quad \cdots\cdots\cdots (iv)$$

From the principle of superposition, the resultant displacement at that point is

www.arjun00.com.np

$$y = y_1 + y_2$$

$$= a \sin \omega_1 t + a \sin \omega_2 t$$

$$= 2\,a \sin\left(\frac{\omega_1 + \omega_2}{2}\right) t \cos\left(\frac{\omega_1 - \omega_2}{2}\right) t \quad \cdots (v)$$

where, $\omega_1 = 2\pi\ f_1$ and $\omega_1 = 2\pi\ f_2$. =Then Eq. (v) becomes

$$y = \left[2\,a \cos 2\pi \left(\frac{f_1 - f_2}{2}\right) t\right] \mathbf{\sin 2\pi} \left(\frac{\mathbf{f_1 + f_2}}{\mathbf{2}}\right) \mathbf{t} \quad \cdots (vi)$$

Comparing with $\boldsymbol{y} = A.\mathbf{sin}(\mathbf{2\pi}\boldsymbol{f}.\boldsymbol{t})$

The above Eq. (vi) shows a resultant wave which is a **sin function** with frequency $f = \frac{f_1 + f_2}{2}$ and

$$\textbf{amplitude (A)} = \left[2\,a \cos 2\pi \left(\frac{f_1 - f_2}{2}\right) t\right]$$

So, the amplitude of beat is not constant but varies with time with frequency "**f**" .

**Download from www.arjun00.com.np

Condition for Maxima

The beat detected when resultant amplitude

$A = \mathbf{2\ a}\ \cos 2\pi\left(\frac{f_1 - f_2}{2}\right)\ t$ is **maximum**, $i.e$, **cosine function** has a value $+\mathbf{1}$ or $-\mathbf{1}$ so, $A = \pm\mathbf{2\ a}$

Hence,

$$2a.\cos 2\pi\left(\frac{f_1 - f_2}{2}\right)t = \pm 2a$$

$$\cos 2\pi\left(\frac{f_1 - f_2}{2}\right)t = \pm 1$$

$$or, \quad \cos 2\pi\left(\frac{f_1 - f_2}{2}\right)t = \cos n\pi$$

Where $n = 0,1,2,3, \ldots$

www.arjun00.com.np

$$2\pi\left(\frac{f_1 - f_2}{2}\right)t = n\pi$$

$$or, \quad t = \frac{n}{f_1 - f_2}$$

In General, $t_n = \dfrac{n}{f_1 - f_2}$

$When, \quad n = 0, \quad t_0 = 0,$

$n = 1, \quad t_1 = \dfrac{1}{f_1 - f_2}$

$n = 2, \quad t_2 = \dfrac{2}{f_1 - f_2}, \ldots so\ on.$

The time interval between **two consecutive maxima** is the beat period and it is given by

**Download from www.arjun00.com.np

$$T = t_1 - t_0 \quad = \quad t_2 - t_1 =, \ldots = t_{n+1} - t_n$$

$$\text{or, } T = \frac{1}{f_1 - f_2} - 0 = \frac{2}{f_1 - f_2} - \frac{1}{f_1 - f_2}, \ldots$$

$$\therefore T = \frac{1}{f_1 - f_2} = \frac{1}{f_1 - f_2}, \ldots$$

Since , Frequency is the reciprocal of period, $f = \frac{1}{T}$

$$\therefore \text{ frequency of maxima (f)} = \frac{1}{T} = \frac{1}{\frac{1}{f_1 - f_2}} = \mathbf{f_1 - f_2} \quad \cdots\cdots (vii)$$

5) State Stoke's law. Derive an expression for coefficient of viscosity of liquid for a spherical body falling inside the liquid.

- Stokes's law states that, the viscous force acting on a small spherical body of radius 'a' moving with terminal velocity 'v' is through a fluid of coefficient of viscosity (η) is given by;

  $F = 6\pi\eta a v$

Determination of viscosity of liquid for spherical body falling inside the liquid.

- When a spherical ball falls freely through a viscous medium such as a liquid, its velocity at first goes on increasing. Finally, a stage is reached at which the weight of the ball is just equal to the sum of upthrust due to buoyancy and the upward viscous force. So, the net force acting on the body is zero and the ball starts to fall with a constant velocity,

  i.e. terminal velocity.

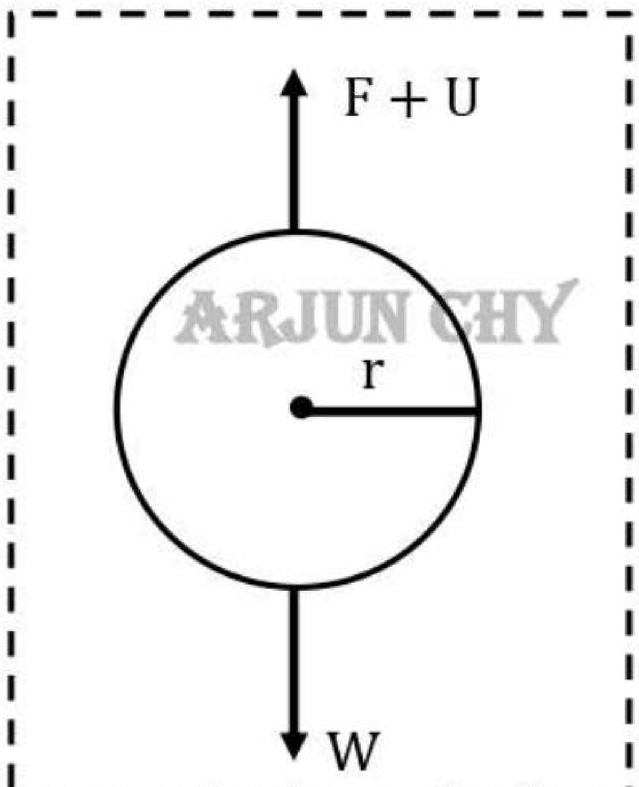

A metal sphere of radius 'r' falling freely under gravity in a liquid.

**Download from www.arjun00.com.np

- Let 'r' be the radius of the spherical ball falling through the viscous fluid of density (σ) and coefficient of viscosity (η). Let (P) be the density of the material of the ball. The various forces acting on the body are:

  - Its weight 'W' in the downward direction.
  - Upward thrust 'U' is equal to the weight of the displaced fluid.
  - The viscous force 'F' in a direction opposite to the direction of motion of the body.

So, the downward force acting on the ball = U + F
When the ball is falling with the terminal velocity 'v', then

www.arjun00.com.np

$$\text{Downward force} = \text{Upward force}$$

$$\mathbf{F = W - U} \qquad \cdots\cdots (\boldsymbol{i})$$

According to Stroke's law, viscous force is $F = 6\pi\eta r v$

$$\text{Weight of body, } (W) = mg$$

$$= (\text{volume} \times \text{density}) \text{ of the body} \times g$$

$$= \frac{4}{3}\pi r^3 \rho g \qquad \cdots\cdots (\boldsymbol{ii})$$

$$\text{Upthrust, } U = \text{weight of liquid displaced}$$

$$= (\text{volume} \times \text{density}) \text{ of fluid} \times g$$

$$= \frac{4}{3}\pi r^3 \sigma g \qquad \cdots\cdots (\boldsymbol{iii})$$

Equation ($\boldsymbol{i}$) becomes as,

$$6\pi\eta r v = \frac{4}{3}\pi r^3 \rho g - \frac{4}{3}\pi r^3 \sigma g$$

$$= \frac{4}{3}\pi r^3 (\rho - \sigma) g$$

**Download from www.arjun00.com.np

or, $$\eta = \frac{2r^2(\rho - \sigma)g}{9v}$$

This is the expression for the coefficient of viscosity of liquid for spherical body falling inside the liquid.

6) What is specific charge of an electron? Explain with necessary theory, the J-J Thomson's experiment to determine specific charge of electron.

➢ *See the Solution of 2080 (old) of Q.no 6 on Page no. 109*

www.arjun00.com.np

7) Define capacitance of a capacitor. Derive equivalent capacitance when three capacitors are connected in parallel.

➢ The ability of a capacitor to store charge is called its capacitance. The rise in potential difference between conducting plates is directly proportional to the charge given to them.

$i.e.\ \ q \propto V \Rightarrow q = CV$

Where C is a constant of proportionality & is called the capacitance of the conductor. Thus,

$$C = \frac{q}{V}$$

When $V = 1$ volt, then $C = q$

Thus, capacitance of a capacitor is numerically equal to the charge required to rise p.d. by 1 volt. The *Sl* unit of capacitance is Farad (F).

**Download from www.arjun00.com.np

Parallel Combination of Capacitor

- A combination in which positive plates of all capacitors are connected to a common point is called parallel combination of capacitors. Adjoining figure shows the parallel combination of capacitors C_1 , C_2 and C_3 so that the potential difference across the combination is same say, V.

Since, individual capacitance is different and the potential difference is same the charge stored in each capacitor must be different which is given by:

$$\mathbf{q_1 = C_1 V} \quad \cdots\cdots (i)$$
$$\mathbf{q_2 = C_2 V} \quad \cdots\cdots (ii)$$
$$\mathbf{q_3 = C_3 V} \quad \cdots\cdots (iii)$$

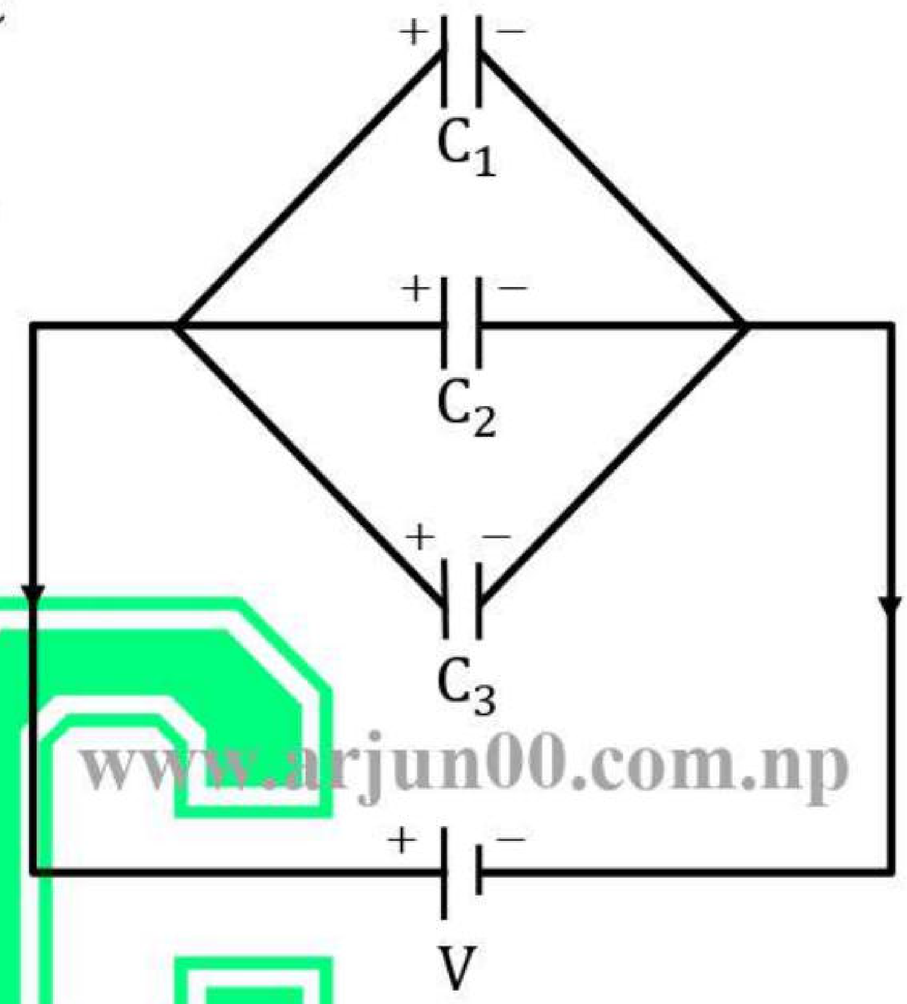

Parallel Combination of Capacitors.

www.arjun00.com.np

From conservation of charge, if 'q' is the charge supplied by cell, then

$$q = q_1 + q_2 + q_3$$
$$= C_1V + C_2V + C_3V$$
$$= \mathbf{V(C_1 + C_2 + C_3)} \quad \cdots (iv)$$

If ' C_P' represents the effective capacitance of parallel combination, then we have

$$\mathbf{q = C_p V} \quad \cdots (v)$$

Equating (iv) and (v), we get,

$$\mathbf{C_p = C_1 + C_2 + C_3}$$

If there are 'n' capacitors combined is parallel then,

$$\boxed{\therefore\ \mathbf{C_p = C_1 + C_2 + C_3 + \cdots + C_n}}$$

Hence, in parallel combination, the effective capacitance is equal with the sum of individual capacitance.

**Download from www.arjun00.com.np

8) How will you convert galvanometer into ammeter?

➢ *See the Solution of 2080 (old) of Q.no 12 on Page no. 119*

9) Discuss the various modes of vibration in closed organ pipe.

➢ *See the Solution of 2077 R/B of Q.no 9 on Page no. 18*

10) Explain the motion of electron inside the electric field.

➢ Let a beam of electrons **moving horizontally with velocity 'v'** enters into an electric field due to two parallel plates AB and CG the electron beam deflected **towards a positive plate.**

To find the relation for deflection,

Consider distance between the plates is 'd'. The upper plate AB is connected to a **+ve** terminal of a **source** and the lower plate GG are **earthed** as shown.

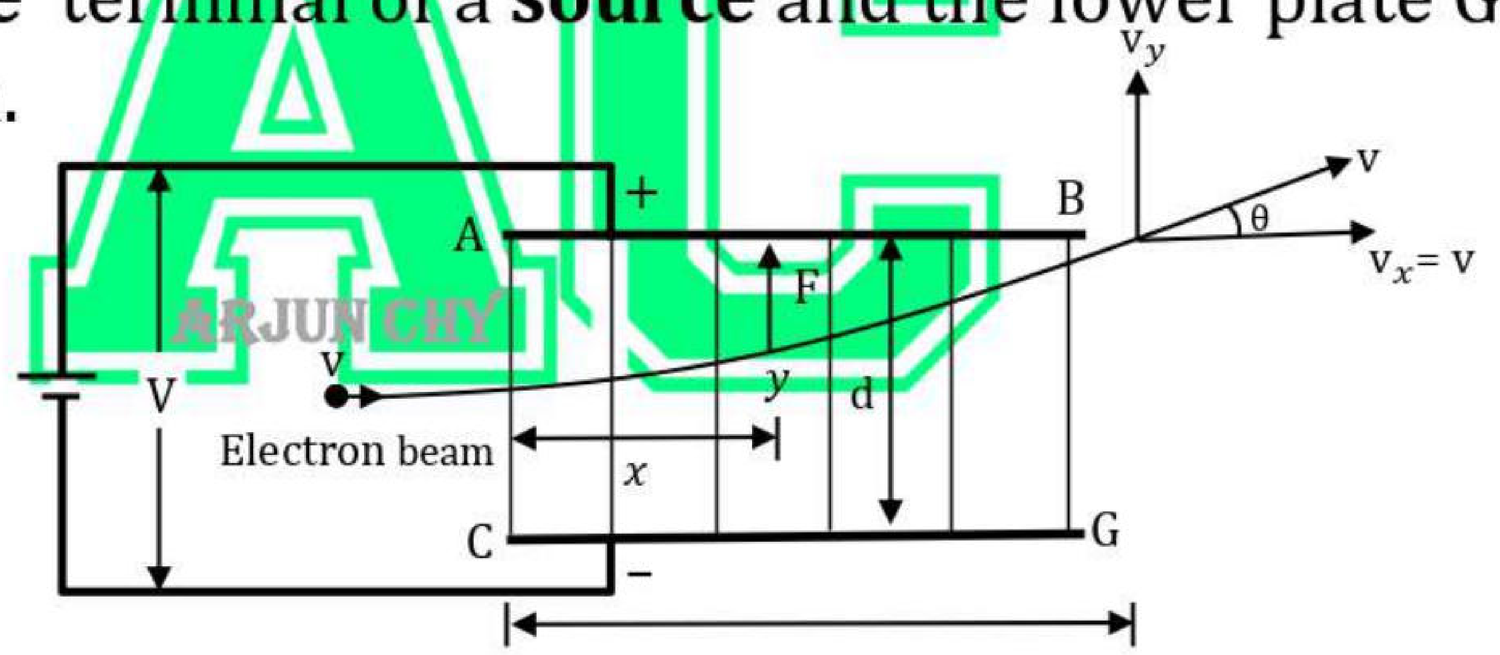

Deflection in electric field

When a beam of electron **enters an electric field**, each **electron** on the attracted towards the **+ve** plate The electric field on electrons acts in upward direction, the magnitude of the force 'F' is given by

$$F = eE = e\frac{V}{d} \qquad \cdots (i) \qquad [\because E = \frac{V}{d}]$$

Suppose, '**m**' is the mass of an electron, '**V**' is the potential difference between the plates. The applied potential difference between the

**Download from www.arjun00.com.np

plates will **accelerate** the electrons. Let us suppose '**a**' is the acceleration produced. Then, from the second law of motion; we have,

$$F = ma \quad \Rightarrow \quad a = \frac{F}{m}$$

Substituting the value of 'F' in (i); we get,

$$a = \frac{eV}{md} \qquad \cdots (ii)$$

During the motion electrons are acted by two velocities; one 'V' along horizontal direction and other along the vertical direction due to the force 'F'.

www.arjun00.com.np

Suppose, after certain interval of time '**t**', the electron covers horizontal distance '**x**' and vertical distance '**y**', then, from equation of motion;

For Horizontal Motion ,

There is no acceleration ($a = 0$) and initial velocity (u)=v

Horizontal motion $(S_x) = ut + \frac{1}{2}\, 0.t^2$

$$\therefore \quad x = vt$$

$$i.e. \quad \mathbf{t} = \frac{\mathbf{x}}{\mathbf{v}} \qquad \cdots (iii)$$

For vertical motion;

$$s_y = u_y t + \frac{1}{2}\, at^2$$

Initally moves with horizontal velocity so, velocity in y direction , $u_y = 0$

$$\therefore \quad y = 0 + \frac{1}{2}\, at^2 = \frac{\mathbf{1}}{\mathbf{2}}\, \mathbf{at^2} \qquad \cdots (iv)$$

From equation (iii) *and* (iv); we get,

**Download from www.arjun00.com.np

$$y = \frac{1}{2} \times a \times \left(\frac{x}{v}\right)^2$$

$$y = \frac{1}{2} \times \frac{eV}{md} \times \left(\frac{x}{v}\right)^2$$

$$= \left(\frac{1}{2} \times \frac{e\mathbf{V}}{mdv^2}\right) \times x^2$$

$\therefore$ *Comparing with* $\mathbf{y = k.x^2}$ $\cdots (v)$

$$\text{Where, } k = \frac{eV}{mdv^2}$$

Hence, it shows that **electrons** moving in an electric field moves in a **parabolic path** in the electric field.

11) What is P-N junction diode? Explain the use of P-N diode as half wave rectifier.

- When a p-type semiconductor is in contact with an n-type semiconductor the device so obtained is called a ***P-N junction diode.*** In actual practice the two regions are created side by side in the same piece of semiconductor.

➢ ***See the Solution of 2078 R/B of Q.no 10 on Page no. 46***

12) Define polarization of light. State and prove Brewster's law.

- The process of confining the light the vibration of the electric of the light waves to one direction is called ***polarization of light*** .

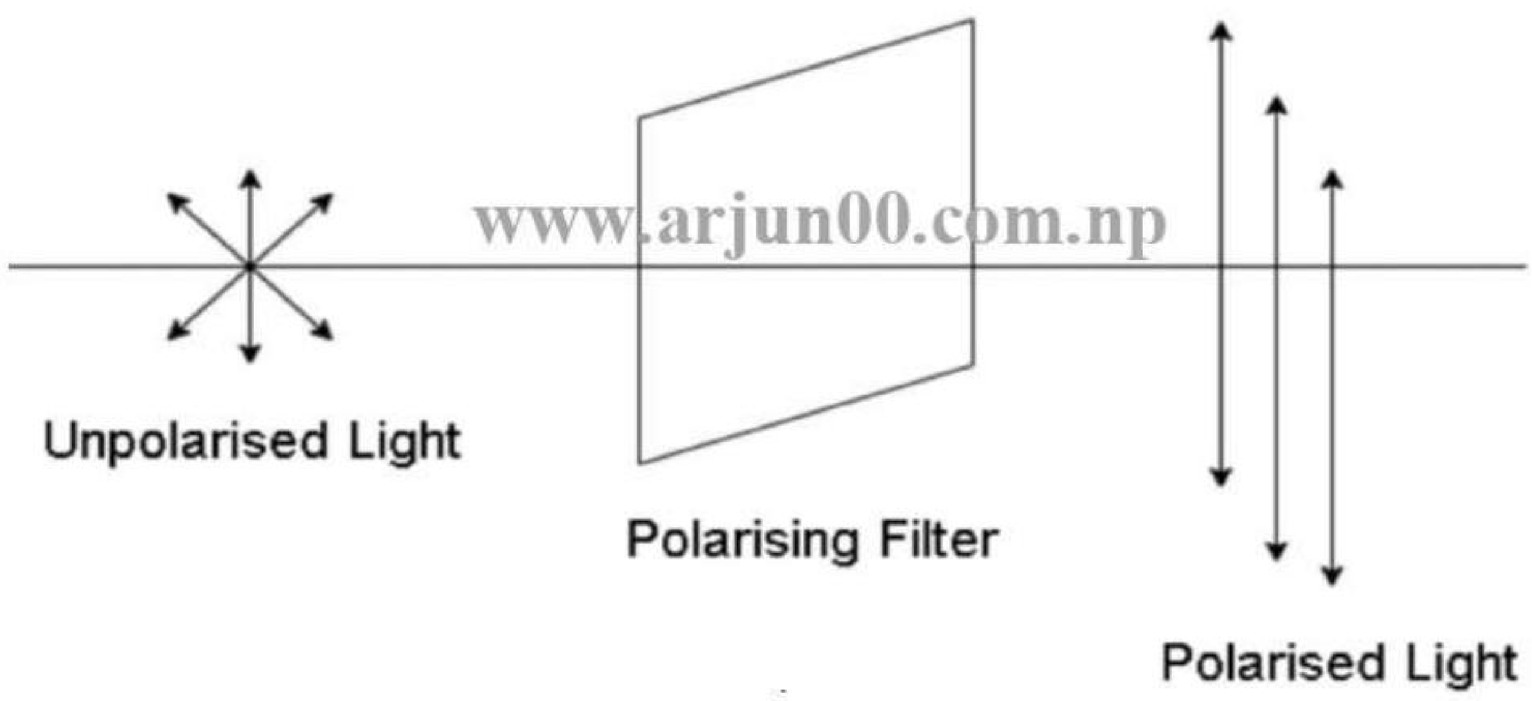

www.arjun00.com.np

**Download from www.arjun00.com.np

➢ *See the Solution of 2078 R/B of Q.no 12 on Page no. 49*

13) The half-life of $_{92}U^{238}$ is 4.5×10^9 years. Calculate the activity of 1 gm sample of $_{92}U^{238}$.

➢ *See the Solution of 2078 R/B of Q.no 20 on Page no. 58*

14) Two parallel resistors 6 Ω and 8 Ω are connected with 4 Ω resistor in series. The connection is supplied to a battery of emf 24 V. If a voltmeter is connected across 4 Ω resistor, find the reading shown by voltmeter.

➢ **Solution**

Given that;

$r = ?$

$R_1 = 6\Omega$

$R_2 = 8\Omega$

$R_3 = 4\Omega$

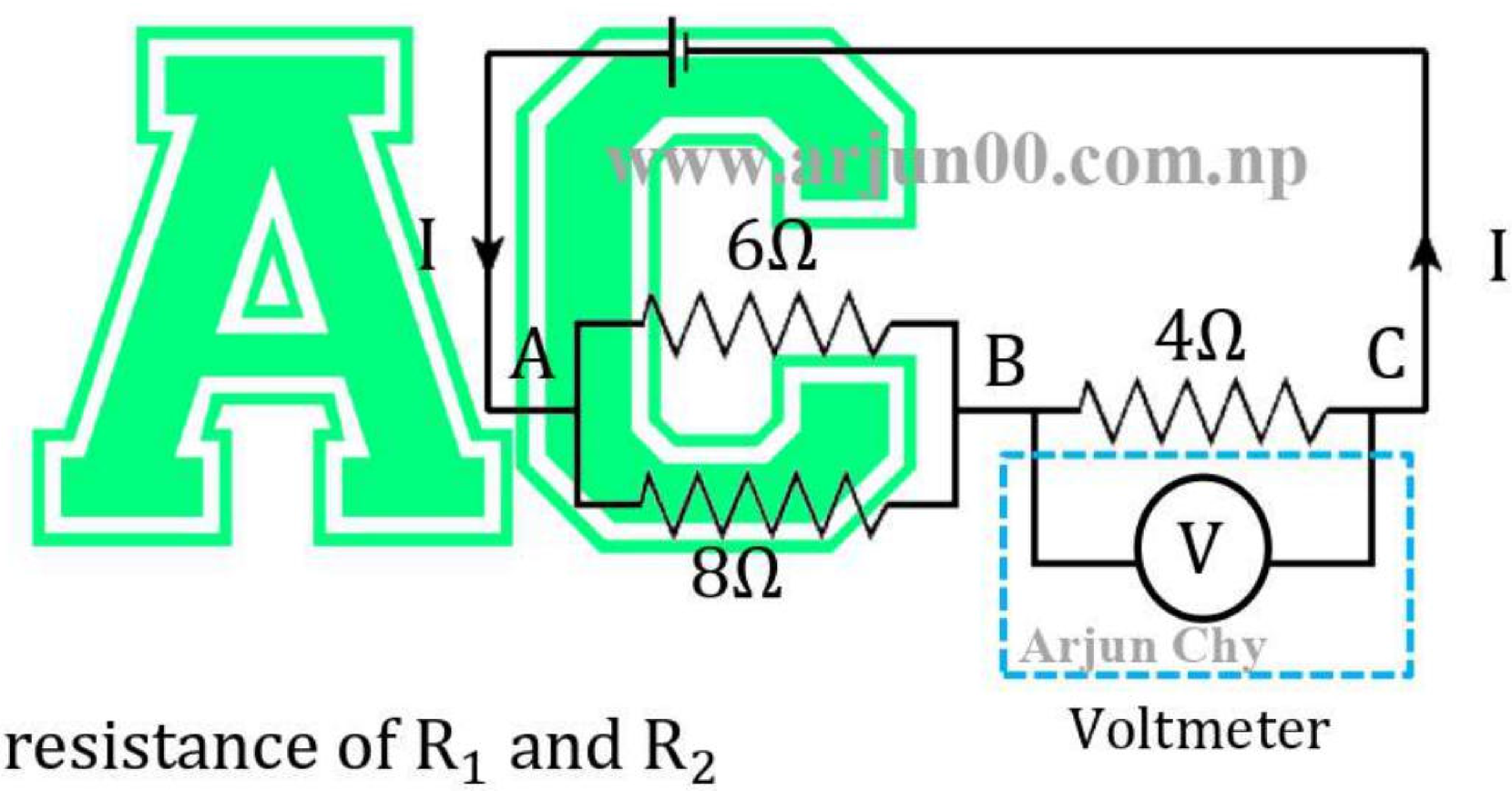

Now, the equivalent resistance of R_1 and R_2 be R_{AB} and calculated as;

$$\frac{1}{R_{AB}} = \frac{1}{R_1} + \frac{1}{R_2}$$

$$= \frac{1}{6} + \frac{1}{8}$$

$$\frac{1}{R_{AB}} = \frac{8+6}{6 \times 8} = \frac{14}{48}$$

$$\therefore \quad R_{AB} = \frac{48}{14} = \mathbf{3.43\ \Omega}$$

**Download from www.arjun00.com.np

Equivalent resistance $(R_{eq}) = 3.42 + 4 = \mathbf{7.42\ \Omega}$

We have,

$$E = IR_{eq}$$

$$I = \frac{E}{R_{eq}} = \frac{24}{7.42}$$

$$\therefore\ I = \mathbf{3.23\ A}$$

Since, In series the current is same so, I

www.arjun00.com.np

Potential difference across 4 Ω ,

$$(V) = IR_3$$

$$= 3.23 \times 4$$

$$= \mathbf{12.92\ V}$$

Hence, The reading shown by the Voltmeter is 12.92 V

15) A 50Ω resistor, 2μF capacitor and a 30 mH inductor are connected in series with an AC source of voltage 200 V and frequency 50 Hz. Find the impedance and current flow in the circuit.

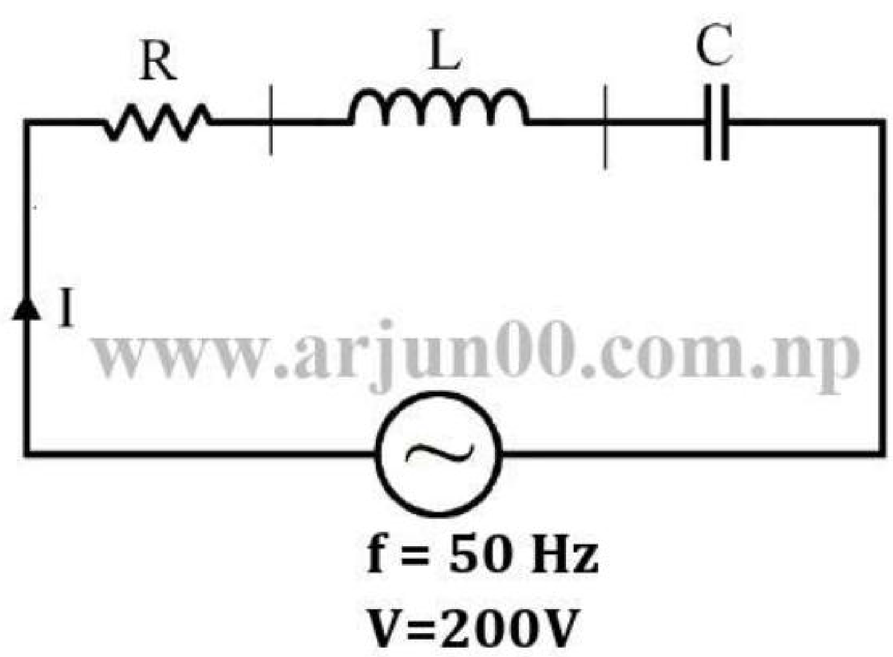

➢ **Solution**

Given that;

$$R = 50\Omega$$

$$L = 30mH = 30 \times 10^{-3}H$$

$$C = 2 \times 10^{-6}F$$

Current through Circuit I =?

**Download from www.arjun00.com.np

We Have,

$$\text{Inductance Reactance, } X_L = WL = 2\pi fL$$
$$= 2\pi \times 50 \times 30 \times 10^{-3}$$
$$\mathbf{X_L = 9.4247\ \Omega}$$

$$\text{Capacitive Reactance, } X_C = \frac{1}{wc}$$
$$= \frac{1}{2\pi \times 50 \times 2 \times 10^{-6}}$$

$$\mathbf{X_C = 1591.549\ \Omega}$$

Since, $X_C > X_L$ so,

In LCR Circuit,

$$Z = \sqrt{R^2 + (X_C - X_L)^2}$$
$$= \sqrt{50^2 + (1591.549 - 9.4247)^2}$$
$$= 1582.914\Omega$$

Impendence (Z) $= \mathbf{1582.914\ \Omega}$

www.arjun00.com.np

Let I be current through Circuit,

$$I = \frac{V}{Z}$$
$$I = \frac{200}{1582.914}$$
$$\mathbf{I = 0.1263\ \ Ampere}$$

**Download from www.arjun00.com.np

16) Light radiation of wavelength 6800 Å falls on a photosensitive metal plate of work function 1.8 eV. Find the velocity of ejected photoelectron. (Mass of electron is 1.6×10^{-31}kg, charge of electron is 1.6×10^{-19} and speed of light is 3×10^{-8}ms^{-1}).

➢ Solution

Given, $\lambda = 6800$ Å $= 6800 \times 10^{-10}$m

$work\ function$, $\phi = 1.8$ e V

Energy of the incident photon,

$$E = hf = \frac{hc}{\lambda}$$

$$= \frac{6.62 \times 10^{-34} \times 3 \times 10^{8}}{6800 \times 10^{-10}}$$

$$= 2.920 \times 10^{-19} \text{J}$$

$$\because 1eV = 1.6 \times 10^{-19}\ J$$

$$= \frac{2.920 \times 10^{-19}}{1.6 \times 10^{-19}} \text{eV}$$

$$= \mathbf{1.825\ eV}$$

www.arjun00.com.np

K. E. of photoelectrons emitted, K. E. $= hf - \phi$

$$= E - \phi$$

$$= 1.825 - 1.8 \text{ eV}$$

$$= 0.025 \text{ eV}$$

$$= 0.025 \times 1.6 \times 10^{-19} \text{J}$$

Let v be velocity of photoelectron, then

K. E. of photoelectron $= \frac{1}{2} m_e v^2$

$$\because m_e = mass\ of\ electron = 9.1 \times 10^{-31} kg$$

**Download from www.arjun00.com.np

$$\therefore v = \sqrt{\frac{2\text{K. E.}}{\text{m}_e}}$$

$$= \sqrt{\frac{2 \times 0.025 \times 1.6 \times 10^{-19}}{9.1 \times 10^{-31}}} = \mathbf{93761.45 m/s}$$

Hence, velocity of photoelectron is 93761.45 m/s

17) At what temperature , the velocity of sound in air is increase by 40% to that of 30°C.

➢ **Solution**

Let 'T_2' be temperature at which the velocity of sound in air is increased by 40% to that at 30°C.

At 30°C

$T_2 = ?$ $\qquad$ $T_1 = 30 + 273 = 303\ K$

And, by question,

$$V_2 = V_1 + 40\%V_1 = 1.4V_1 \quad \cdots\cdots\cdots (i)$$

We have,

www.arjun00.com.np

Velocity is directly prop. to square root of temperature

$$V \propto \sqrt{T}$$

So,

$$\frac{V_2}{V_1} = \sqrt{\frac{T_2}{T_1}}$$

**Download from www.arjun00.com.np

$$\frac{1.4V_1}{V_1} = \sqrt{\frac{T_2}{303}} \qquad [\because \ from\ (i)\ ]$$

$$\Rightarrow 1.4^2 = \frac{T_2}{303}$$

$$T_2 = 593.88\ K$$

$$T_2 = (593.88 - 273)°C$$

$$\mathbf{T_2 = 320.88°C}$$

Hence, 320.88°C be temperature at which the velocity of sound in air is increased by 40% to that at 30°C

18) A capillary tube of 0.3cm diameter is placed vertically inside a liquid of density 800 kg/m^3, surface tension 5×10^{-4} N/m and angle of contact 30°. Calculate to which the liquid rises in the capillary tube.

www.arjun00.com.np

➢ **Solution**

Given;

$$\text{Diameter} = 0.3\text{cm} = 0.003\ \text{m}$$

$$\text{Radius} = \frac{0.003}{2} = 0.0015\ \text{m}$$

$$\text{Density } (\rho) = 800\ \text{kg/m}^3$$

$$\text{Surface Tension (T)} = 5 \times 10^{-4}\text{N/m}$$

$$\text{Angle of contact } (\theta) = 30°$$

We have,

$$h = \frac{2T\cos\theta}{r\rho g}$$

**Download from www.arjun00.com.np

$$h = \frac{2 \times 5 \times 10^{-4} \times \cos 30°}{0.0015 \times 800 \times 10}$$

$$h = \frac{2 \times 5 \times 10^{-4} \times \frac{\sqrt{3}}{2}}{12}$$

$$= \mathbf{7.2168 \times 10^{-5} m}$$

∴ Height to which water will rise in a capillary tube is $\mathbf{7.217 \times 10^{-5}}\ \boldsymbol{m}$

19) In a Young's double slit experiment, the separation of four bright fringes is 2.5 mm when the wavelength of light used is 6200 Å. The distance of screen from the slits is 0.8 m. Calculate the separation of two slits.

➢ **Solution**

Given;

Wavelength of light, $\lambda = 6200$ Å $= 6200 \times 10^{-10}$m

Distance from silt to screen (D) = 0.8m

Silts separation, d =?

n = 4

www.arjun00.com.np

Separation of 4th bright Fringes$(y) = 2.5mm$

$= 2.5 \times 10^{-3} m$

We have,

For nth Bright fringes, $y = \frac{n\lambda D}{d}$

$$\Rightarrow d = \frac{n\lambda D}{y}$$

**Download from www.arjun00.com.np

$$or, \qquad d = \frac{4 \times 6200 \times 10^{-10} \times 0.8}{2.5 \times 10^{-3}}$$

$$or, \qquad d = 7.936 \times 10^{-4} m$$

$$\therefore d = 0.7936 mm$$

Hence, separation of two slits is 0.7936 mm

20) An electron is revolving in a uniform magnetic field of strength 1.5×10^{-2}T. The radius of circular path is $1.2 \times 10^{-2} m$. Through what potential difference was the electron initially accelerated from rest?[e/m for electron $= 1.77 \times 10^{11} c/kg$].

www.arjun00.com.np

➢*See the Solution of 2077 R/B of Q.no 17 on Page no. 28*

← The End →

** "If you find a mistake in Question/Answer, Kindly take a Screenshot and email to info@arjun00.com.np "

**This Solution is for Educational Purpose Only. If you misuse it, we are not Responsible.

Support us

A Small gift will help maintain this website. →

Feel Free to Read at no cost.

Support us on: fonepay

you can donate as you wish.

ARJUN CHAUDHARY

2222120014283943

Copyright © belongs to the Arjun Chy

**Download from www.arjun00.com.np

Engineering Physics –II__(Engg. All) 2nd Sem

(2081 *Special Scholarship*) Question Solution.

Compile & Written by © Arjun Chy
Website :- www.arjun00.com.np
Facebook :-www.facebook.com/Arjun00.com.np

1) What is potential difference? Derive an expression for potential difference between two points.

- The potential difference between two points inside the electric field is defined as the amount of work done in moving a unit positive test charge from one point another point against the electric field.

- Suppose a unit positive charge is at any point 'P' so that OP = X. Since the force experienced by the units positive test charge(q_0) is equal to the electric field intensity at that point.

$$i.e.,\ f = \frac{1}{4\pi\varepsilon_0}\frac{Q}{X^2}$$

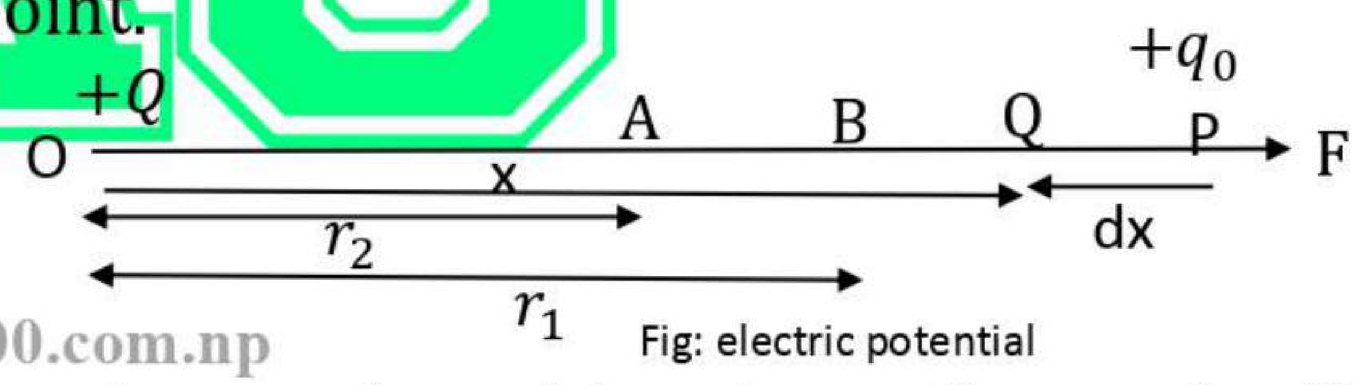

Fig: electric potential

www.arjun00.com.np

Thus, the small work done in moving a unit positive charge from point 'P' to point 'Q' is;

$$dw = f \times (-dx) = -\frac{1}{4\pi\varepsilon_0}\frac{Q}{x^2}dx$$

-ve sign shows that **Force** and **displacement are in opposite direction.**

Therefore, total work done in moving a unit positive charge 'B' to point 'A' is;

**Download from www.arjun00.com.np

$$W_{BA} = \int_{r_1}^{r_2} \frac{1}{4\pi\varepsilon_0}\frac{Q}{x^2}dx = -\frac{Q}{4\pi\varepsilon_0}\left[-\frac{1}{x}\right]_{r_1}^{r_2} = \frac{Q}{4\pi\varepsilon_0}\left[\frac{1}{r_2} - \frac{1}{r_1}\right]$$

By definition, the potential difference between two points 'A' to 'B' is;

$$V_{AB} = W_{BA}$$

$$\therefore \mathbf{V_{AB} = \frac{Q}{4\pi\varepsilon_0}\left(\frac{1}{r_2} - \frac{1}{r_1}\right)}$$

This gives the potential difference between two points 'A' and 'B'.

2) What is Wheatstone bridge? Describe its balanced condition using Kirchoff's law

- Wheatstone Bridge is an electrical circuit, which is used for the accurate measurement of resistance of a conductor.
- ***See the Solution of 2080 (old) of Q.no 1 on Page no. 100***

www.arjun00.com.np

3) State Biot-Savart's law. Use this law to find magnetic field at the Centre of a current carrying circular coil.

- Biot savart law states that " Magnetic field due to a current-carrying conductor at a point 'P' is **inversely proportional to the square of the distance between the conductor and point, and the magnetic field is directly proportional to the length of the conductor, current flowing in the conductor, and Angle between current element and magnetic field** ".

Then, according to Biot-Savart law; we can write,

$$\Delta B \propto \frac{1}{r^2} \quad \cdots\cdots (1)$$

$$\Delta B \propto \Delta l \quad \cdots\cdots (2)$$

$$\Delta B \propto I \quad \cdots\cdots (3)$$

$$\Delta B \propto \sin\alpha \quad \cdots\cdots (4)$$

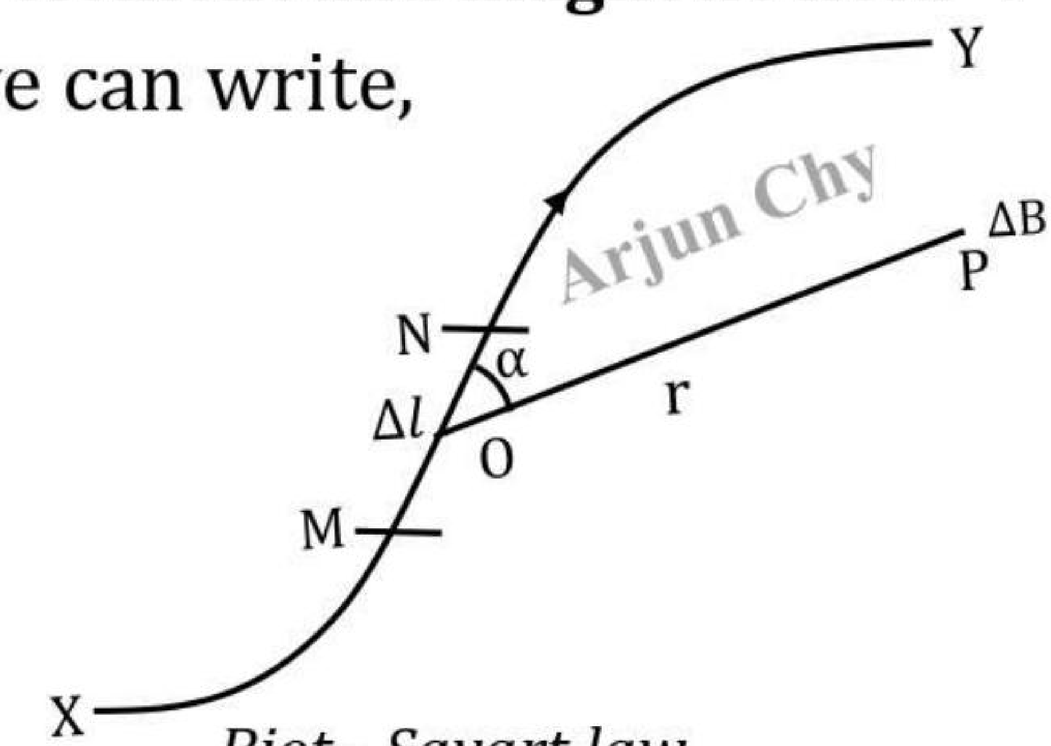

Biot - Savart law

Arjun Chy

**Download from www.arjun00.com.np

Magnetic field at the Centre of Current Carrying circular coil.

- Let a circular coil of radius 'r' in which current flowing through the coil is 'I'. From Biot-Savart law the magnetic flux density at the centre of the coil due to a small element dl of the coil is given by

$$dB = \frac{\mu_0}{4\pi}\frac{I\,dl\sin\alpha}{r^2} \Rightarrow \frac{\mu_0}{4\pi}\frac{I\,dl\sin 90°}{r^2}$$

$$dB = \frac{\mu_0}{4\pi}\frac{I\,dl}{r^2}$$

The total length of the wire is 2π r.

Total magnetic flux due to the coil is given by integrating above relation;

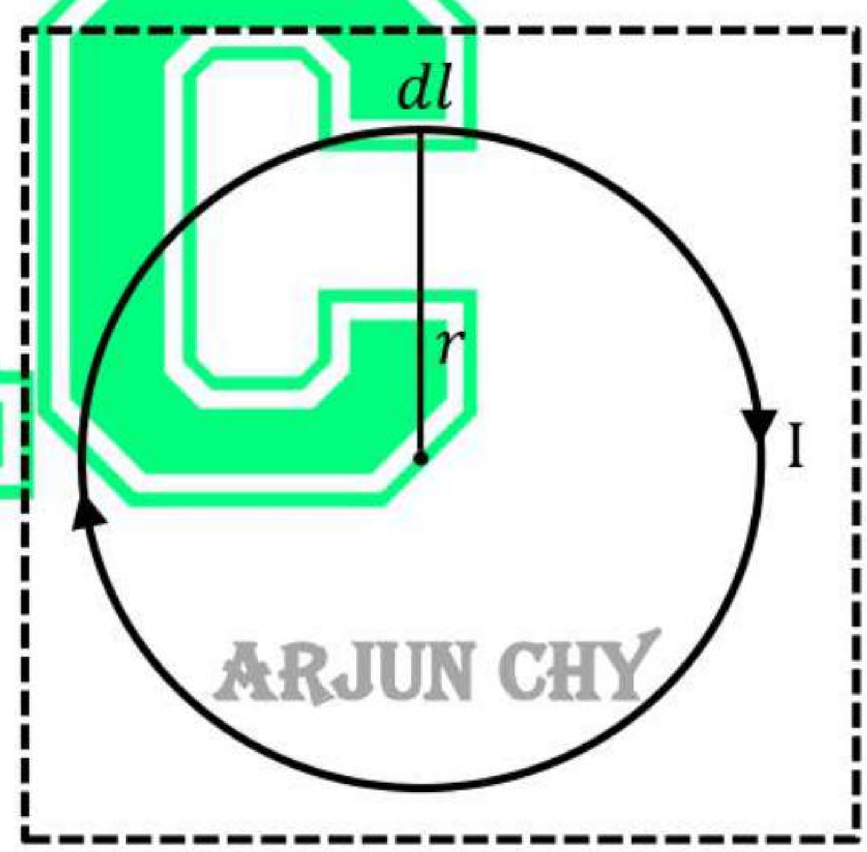

$$i.e, \qquad B = \int_0^{2\pi r} \frac{\mu_0}{4\pi}\frac{I\,dl}{r^2}$$

$$= \frac{\mu_0 I}{4\pi\, r^2}\int_0^{2\pi r} dl$$

$$= \frac{\mu_0 I}{4\pi\, r^2}\, 2\pi r$$

$$\therefore \mathbf{B} = \frac{\mu_0 I}{2r}$$

If the coil has **'N'** turns, each coil carrying same current 'I' in the same direction, then the field is given by ;

$$\mathbf{B}_{Center} = \frac{\mu_0 N\, I}{2r}$$

**Download from www.arjun00.com.np

4) Define interference of light. Derive an expression for fringe width in Young's double slit experiment.

➢ *See the Solution of 2080 (old) of Q.no 4 on Page no. 106*

5) Define beat and beat frequency. Derive an expression for beat frequency.

➢ *See the Solution of 2080 (New) of Q.no 4 on Page no. 129*

6) State Bohr's postulates and hence derive expression for the energy of electron in n^{th} orbit of hydrogen atom.

➢ *See the Solution of 2077 R/B of Q.no 4 on Page no. 9*

www.arjun00.com.np

7) Derive an expression for energy stored in a charged capacitor.

➢ *See the Solution of 2078 R/B of Q.no 7 on Page no. 44*

8) Differentiate between steam line flow and turbulent flow in liquid.

Steam Line Flow	Turbulent Flow
In this flow every particle passing through a point follows exactly the same path as preceding particle.	In this flow liquid becomes zigzag and eddy flow is developed.
In such flow the motion of particles is predictable.	In such flow motion of particles is not predictable.
It always represents a fixed path.	The path of particle changes continuously.

www.arjun00.com.np

**Download from www.arjun00.com.np

Here, velocity at any point remains constant both magnitude and direction.	In this case frequent or sudden in change in velocity takes place and flow is unsteady.
No eddies and whirlpools in the liquid.	There are eddies and whirlpools in the liquid.
Flow of water through a uniform pipe is an example.	The smoke in the air is an example

9) State Ohm's law. Verify it experimentally.

- It states that the current flowing through a conductor is directly proportional to the potential difference across its ends, provided that the physical conditions remain unchanged.

www.arjun00.com.np

Let 'V' be the potential difference across two ends of a conductor and 'I' be the current flowing through it, then, according to ohm's law,

$$V \propto I$$

$$\therefore \quad V = IR$$

Where, R is the resistance of the conductor.

Experimental Verification of Ohm's Law

- A cell of e.m.f. 'E', a key 'k', rheostat R_h a ammeter 'A' and a resistor 'R' are connected in series. A voltmeter 'V' is connected across the resistor. A key is switched on. The current 'I' and potential

**Download from www.arjun00.com.np

difference across resistance 'R' are noted from ammeter 'A' and voltmeter 'V' respectively by varying resistance of rheostat R_h. **A graph between 'V' and 'I' plotted which is straight line passing through the origin as shown in figure** (***b***), which proves that potential difference is directly proportional to the current flowing through it.($V \propto i$)

$i.e.$, Ohm's law is verified.

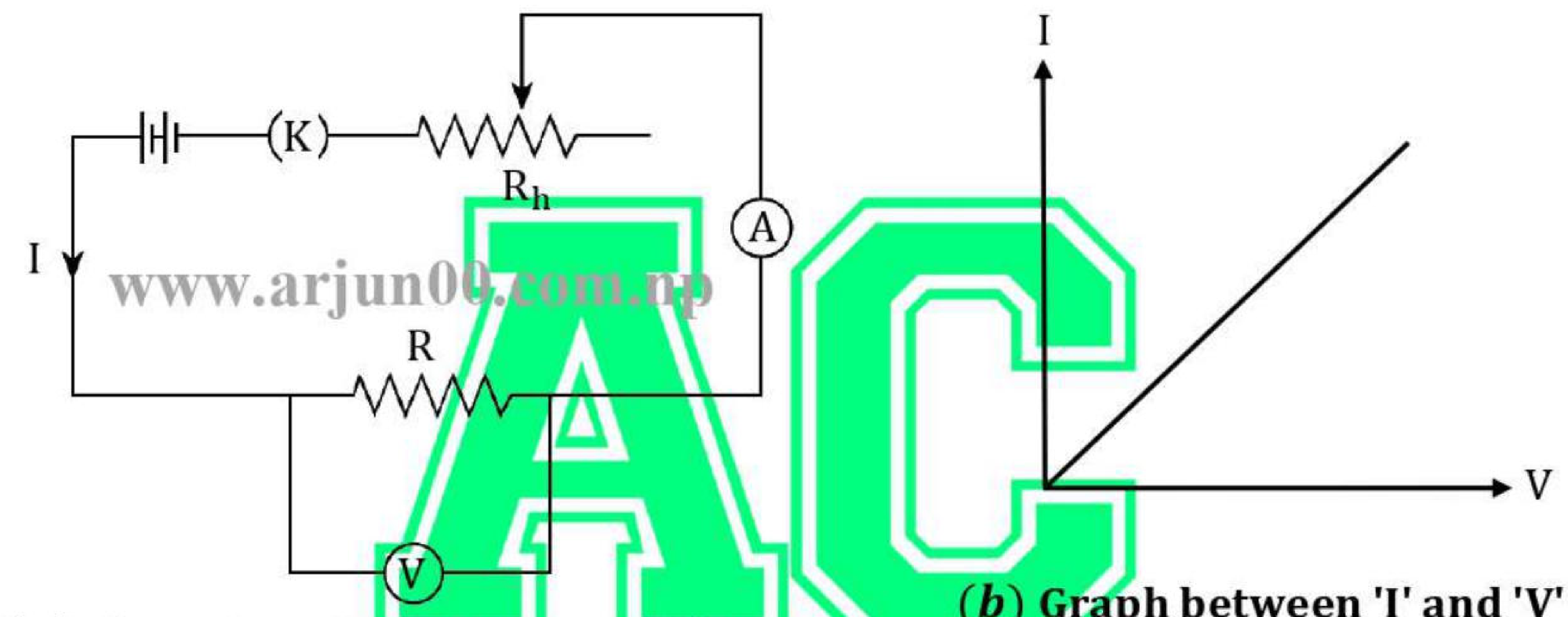

(***a***) **Experimental arrangement for the verification of Ohm's law.**

(***b***) **Graph between 'I' and 'V'**

10) Discuss how semiconductor diodes are used as a full wave rectifier.

➢ *See the Solution of 2080 (old) of Q.no 4 on Page no. 111*

11) Derive an expression for energy stored in a stretched wire.

➢ *See the Solution of 2077 R/B of Q.no 5 on Page no. 13*

12) State and explain Faraday's law of electromagnetic induction.

➢ *See the Solution of 2079 (old) of Q.no 7 on Page no. 88*

**Download from www.arjun00.com.np

13) Three charges of 3×10^{-9}C, -3×10^{-9}C and 1.5×10^{-9}C are placed in air at the corners A, B and C of an equilateral triangle ABC having side 5 cm. Find the force acting on the charge 1.5×10^{-9}c. ($\epsilon_0 = 8.85 \times 10^{-12}\ C^2\ N^{-1}\ m^{-2}$)

➢ *See the Solution of 2078 R/B of Q.no 13 on Page no. 51*

14) A cell of emf 1.5 V and internal resistance 1Ω sends a current through wire of resistance 6Ω and 8Ω in parallel. Find the current flowing through each wire.

➢ **Solution**

Given that;

E.m.f of cell (E) = 1.5 V

Internal resistance (r) = 1Ω

The resistance 6 Ω and 8 Ω are connected in parallel as shown in figure .

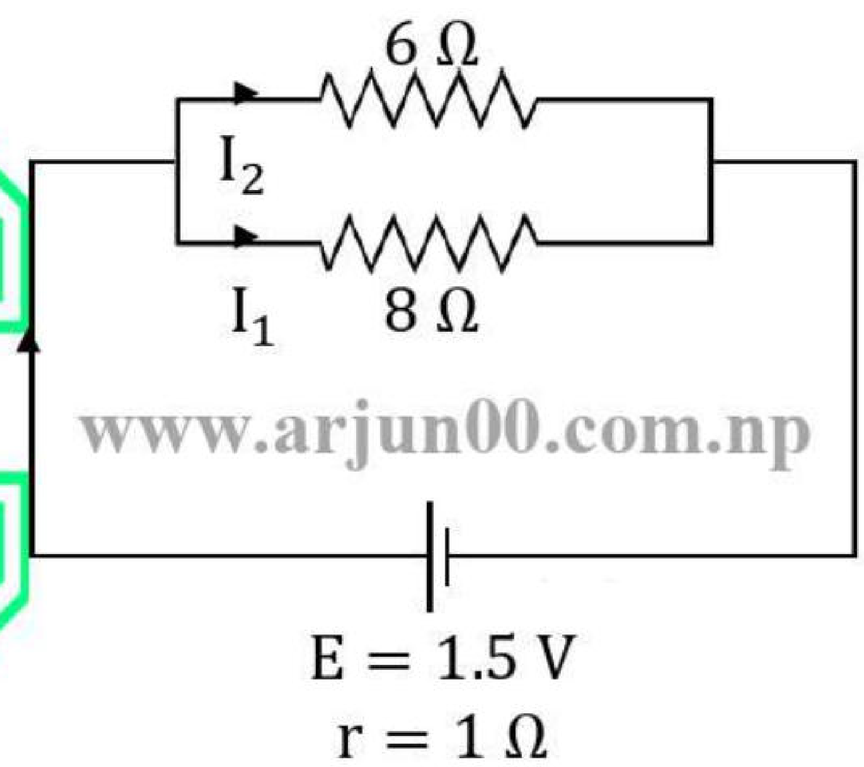

www.arjun00.com.np

The effective resistance of 6 Ω and 8 Ω are in parallel is given by;

$$R_{eq} = \frac{R_1 R_2}{R_1 + R_2} = \frac{6 \times 8}{6 + 8} = \mathbf{3.43\ \Omega}$$

Now,

$$\text{Total current flowing throught circuit (I)} = \frac{E}{R_{eq} + r} = \frac{1.5}{3.43 + 1}$$

$$= \mathbf{0.33\ A}$$

But, in the parallel combination;

P.d. across 6 Ω = P.d. across 8 Ω

**Download from www.arjun00.com.np

or, $I_2 \times 6 = I_1 \times 8$

or, $\frac{I_1}{I_2} = \frac{6}{8} = \frac{3}{4}$

or, $3I_2 = 4I_1$

or, $I_2 = \frac{4}{3} I_1$

$\therefore \quad \mathbf{I_2 = 1.33\ I_1} \qquad \cdots\cdots \quad (i)$

But, Total current (I) $= I_1 + I_2$

or, $0.33 = I_1 + I_2$

or, $0.33 = I_1(1 + 1.33)$

$\therefore \quad I_1 = \frac{0.33}{2.33} = \mathbf{0.142\ A}$

www.arjun00.com.np

Now, From equation (i)

$I_2 = 1.33\ I_1$

$I_2 = 1.33 \times 0.142 = \mathbf{0.188\ A}$

Hence, the current through 6 Ω wire and 8 Ω wire are 0.142 A and 0.188 A respectively.

15) The critical angle of light in a certain substance is 45° What is the polarizing angle?

➢ *See the Solution of 2080 (old) of Q.no 13 on Page no. 120*

**Download from www.arjun00.com.np

16) Calculate the work function in eV for sodium metal given that the threshold wavelength is 6800 Å. ($h = 6.62 \times 10^{-34}$ JS, c = 3×10^{8} m/s).

➢ **Solution**

Given, $\lambda = 6800\ \text{Å} = 6800 \times 10^{-10}\text{m}$

$h = 6.62 \times 10^{-34}\text{J.S}$

$c = 3 \times 10^{8}\ \text{m/s}$

Work function (ϕ) =?

www.arjun00.com.np

We have,

$$\text{Work function } (\phi) = hf = \frac{hc}{\lambda}$$

$$= \frac{6.62 \times 10^{-34} \times 3 \times 10^{8}}{6800 \times 10^{-10}}$$

$$= 2.920 \times 10^{-19}\text{J}$$

$$= \frac{2.920 \times 10^{-19}}{1.6 \times 10^{-19}}\ \text{eV} \qquad \because 1eV = 1.6 \times 10^{-19}\ J$$

$$= 1.825\ \text{eV}$$

$\therefore$ **Work function (ϕ) = 1.825 eV**

17) AC mains of 200 volts, 50 cycles are joined to a circuit containing an inductance of 100 mH and a resistance of 20 Ohms in series. Calculate the power consumed.

➢ **Solution**

Given,

Potential difference of A.C. main (V) = 200V

**Download from www.arjun00.com.np

Frequency of A.C. main (f) = 50 cycles
Value of inductance (L) = 100 mH = 0.1 H
Resistance (R) = 20Ω

We have,

$$\text{Impedance (Z)} = \sqrt{R^2 + X_L^2} = \sqrt{R^2 + (2\pi fL)^2}$$

www.arjun00.com.np

$$= \sqrt{20^2 + (2\pi \times 50 \times 0.1)^2} = \mathbf{37.24\Omega}$$

Now,

$$\text{Current (I)} = \frac{V}{Z}$$

$$= \frac{200}{37.24} = \mathbf{5.370\ A}$$

$$\text{Power Consumed (P)} = I^2R$$

$$= (5.37)^2 \times 20$$

$$= 28.83 \times 20$$

$$\therefore \textbf{Power Consumed (P)} = \mathbf{576.73\ W}$$

18) A radioactive source has decayed to $\left(\frac{1}{128}\right)^{th}$ of its initial Activity after 50 days. What is its half-life?

➢ *See the Solution of 2079 (New) of Q.no 15 on Page 75*

**Download from www.arjun00.com.np

19) The density of air at S.T.P. is $1.293\ kg/m^3$. Find its velocity at S.T.P. and at 27°C. (for air = 1.4).

➢ Solution

Given that;

Density of air at S.T.P $(\rho) = 1.293\ kg/m^3$

$\gamma = 1.4.$ www.arjun00.com.np

Velocity at S.T.P $(v_0) = ?$

Velocity at 27°C $(v_t) = ?$

We have, $P\ at\ N.T.P = 760mm\ of\ Hg = 0.76 \times 13600 \times 9.81$

$= 1.01 \times 10^5 N/m^2$

$$\text{Velocity of S. T. P } (v_0) = \sqrt{\frac{\gamma . P}{\rho}}$$

$$= \sqrt{\frac{1.4 \times 1.01 \times 10^5}{1.293}}$$

$$= \mathbf{330.69\ m/sec.}$$

Now, $v \propto \sqrt{T}$

$$\frac{v_t}{v_0} = \sqrt{\frac{273 + t}{273}}$$

$$v_t = \sqrt{\frac{273 + 27}{273}} \times 330.69$$

$$v_t = \mathbf{346.60\ m/sec.}$$

$\therefore$ **Velocity at S.T.P $(v_0) = 330.69\ m/sec$**

$\therefore$ **Velocity at 27°C $(v_t) = 346.60\ m/sec.$**

**Download from www.arjun00.com.np

20) A capillary tube of 0.4 mm diameter is placed vertically inside a liquid of density 1500 kg/m^3, surface tension 7×10^{-2} Nm^{-1} and angle of contact 0°. Calculate to which the liquid rises in the capillary tube.

➢ Solution

Given;

Diameter(d) = 0.4 mm = 0.4×10^{-3}m

Radius = 0.2×10^{-3}m www.arjun00.com.np

Density (ρ) = 1500 kg/m^3

Surface Tension (T) = 7×10^{-2}Nm^{-1}

Angle of contact (θ) = 0°

We have,

$$h = \frac{2T\cos\theta}{r\rho g} = \frac{2 \times 7 \times 10^{-2} \times \cos 0°}{0.2 \times 10^{-3} \times 1500 \times 9.8}$$

$$\therefore h = \mathbf{4.76 \times 10^{-2} m}$$

← Best of Luck →

This Solution is for Educational Purpose Only. If you misuse it, we are not Responsible.

Support us

A Small gift will help maintain this website. →

Feel Free to Read at no cost.

Support us on: fonepay

you can donate as you wish.

ARJUN CHAUDHARY

2222120014283943

**Download from www.arjun00.com.np

** "I have created this content for students' benefit, so please don't copy it or remove my logos without permission. "

** "If you find a mistake in Question/Answer, Kindly take a Screenshot and email to info@arjun00.com.np "