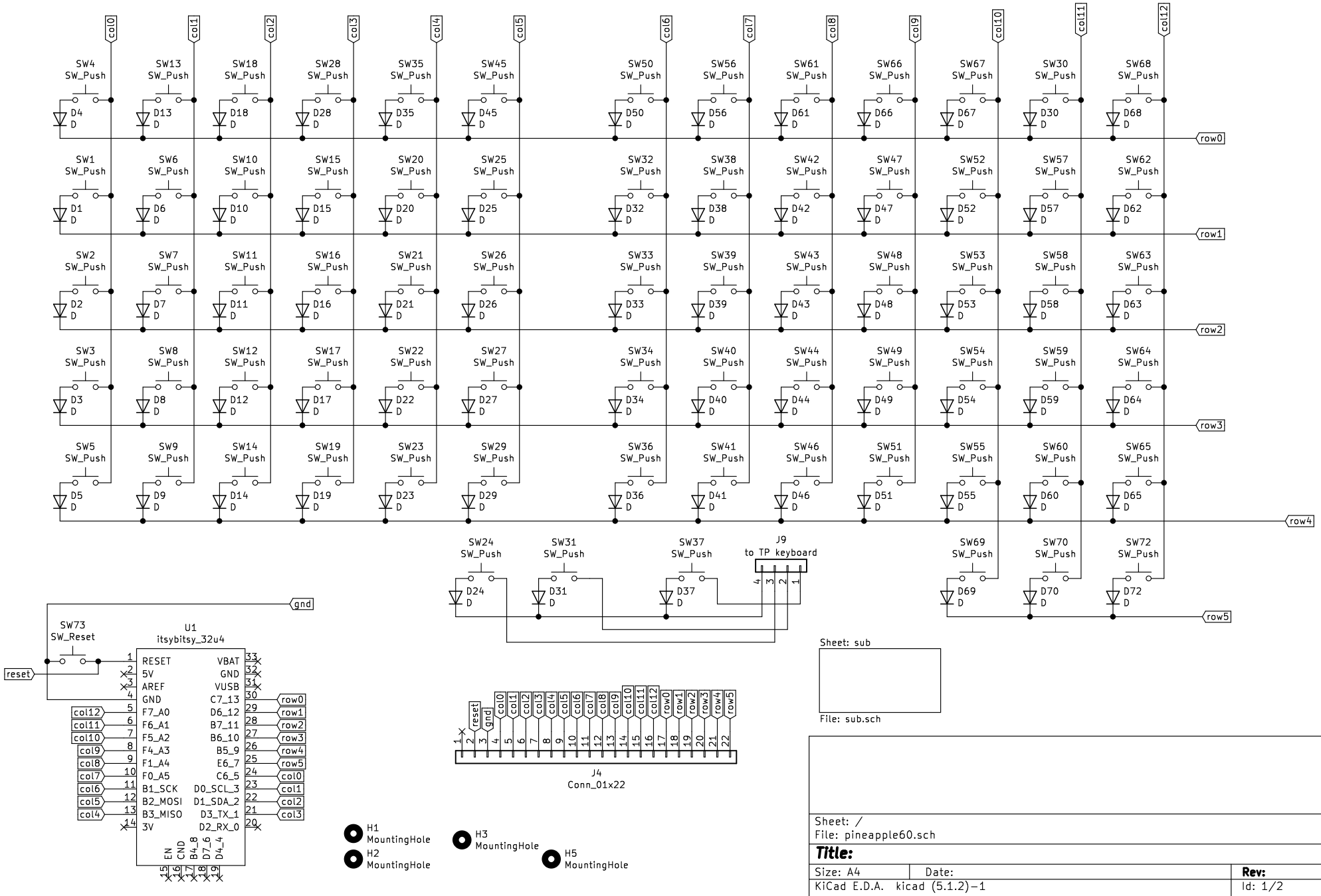

Sheet: /
File: pineapple60.sch

Title:

Size: A4	Date:	**Rev:**
KiCad E.D.A. kicad (5.1.2)-1		Id: 1/2

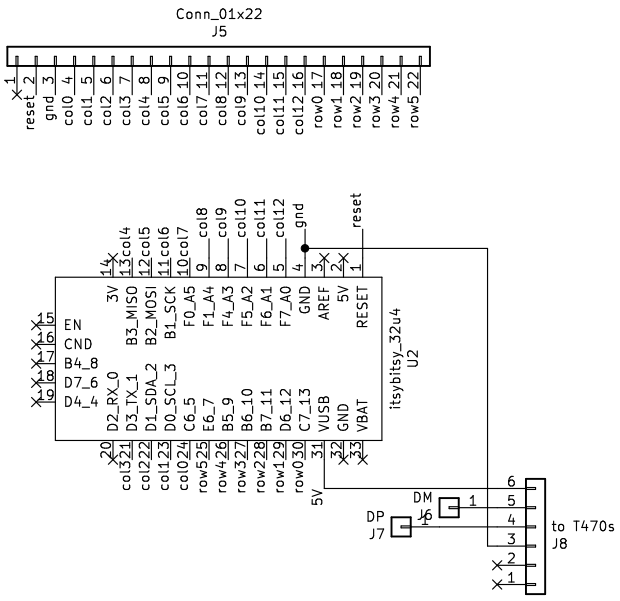

Sheet: /sub/
File: sub.sch

Title:

Size: A4	Date:	**Rev:**
KiCad E.D.A. kicad (5.1.2)-1		Id: 2/2