NCERT Solutions for Class 12 Biology
Chapter 4 - Principles of Inheritance and Variation

Question 1:
Mention the advantages of selecting pea plant for experiment by Mendel.
Solution 1:
Mendel selected the pea plant (*Pisum sativum*) for its following advantages:
1. Pea is an annual plant with a short life cycle. This allows the results to be obtained in a short period.
2. Pea shows seven pairs of characters with contrasting and easy to detect traits like tall and short height, round and yellow seeds, etc.
3. Pea can be propagated by both self and cross pollination. This allowed Mendel to develop pure lines as well as carry out various crosses between plants of contrasting traits.
4. Pea plant gives a large number of seeds for each generation. Therefore it can give a large amount of data that can be statistically more reliable.

Question 2:
Differentiate between the following
a) Dominance and Recessive
b) Homozygous and Heterozygous
c) Monohybrid and Dihybrid.

Solution 2:
a) Dominance and Recessive

Dominance	Recessive
Trait which suppresses the effect of other trait. e.g., tallness suppresses dwarfness.	Trait which is suppressed by the effect of other trait. e.g., dwarfness is suppressed by tallness.
Trait which will express itself even when present along with the recessive trait	Trait that will express itself only in the absence of the dominant trait.
Trait which will express itself in both homozygous and heterozygous condition	Trait which will express itself only in the homozygous condition.

b) Homozygous and Heterozygous

Homozygous	Heterozygous
Genotype comprising of similar alleles for a trait. e.g., TT (for tall) or tt (for short)	Genotype comprising dissimilar alleles for a trait. e.g.Tt
The individual could be either dominant or recessive. e.g: Individuals with TT genotype will be tall plants whereas individuals with tt genotype will be all short plants.	The individual will usually be dominant or incompletely dominant but never recessive
The individuals will produce only one kind of gametes. e.g., either T or t	The individual will produce two types of gametes. e.g., Both T and t gametes.

Homozygous individuals on selfing form pure lines or the true breeding individuals, i.e., those that produce progeny exactly identical to the parents	Heterozygous individuals are hybrids and their progeny will not be exactly identical to the parents and will exhibit different phenotypes.

c) Monohybrid and Dihybrid.

Monohybrid	**Dihybrid**
Monohybrid is an individual that is the result of crossing parents with alternate traits for only one character, like height. e.g., Tt (monohybrid for plant height)	Dihybrid is an individual that is the results of crossing parents with alternate traits for two characters, like seed colour and seed shape. e.g. RrYy (dihybrid for seed colour and seed shape).
Monohybrid cross is a cross between two parents homozygous for contrasting traits of the only one character. e.g., cross between tall (TT) and short (tt)	Dihybrid cross is a cross between two parents that are homozygous for contrasting traits of two different characters, like seed shape and seed colour. e.g., a cross between RRYY (round and yellow seeds) and rryy (wrinkled and green seeds)
Monohybrid cross is used to study the inheritance of a single character only	Dihybrid cross is used to study the inheritance of two different characters.

Question 3:
A diploid organism is heterozygous for 4 loci, how many types of gametes can be produced?
Solution 3:
Loci are the places on the chromosome where genes lie. So, loci and genes can be considered equivalent. If a diploid organism is heterozygous for 4 loci then it will have four contrasting traits, Aa, Bb, Cc, Dd and during meiosis 2^n different gametes will be formed where n is the number of loci. Therefore, 16 different kinds of gametes will be formed.

Question 4:
Explain the Law of Dominance using a monohybrid cross.

Solution 4:
Mendel's Law of Dominance states that characters are controlled by discrete units that occur in pairs, called as factors. In a dissimilar pair of factors, one factor dominates over the other. Therefore, when two parents (P) of contrasting traits are crossed, the progeny (F1) will express only one of the traits and not the other. The trait expressed in the progeny will "dominate" over the trait and is called as the dominant trait whereas the alternate trait is called the recessive trait. The recessive trait reappears in the next generation (F2) when the F1 generation is selfed. This means that the recessive trait did not completely vanish but its expression was suppressed by the presence of the dominant allele. It can be explained as follows using a monohybrid cross. Monohybrid cross is a cross between two parents homozygous for contrasting traits

of the only one character. e.g., cross between tall (TT) and short (tt)

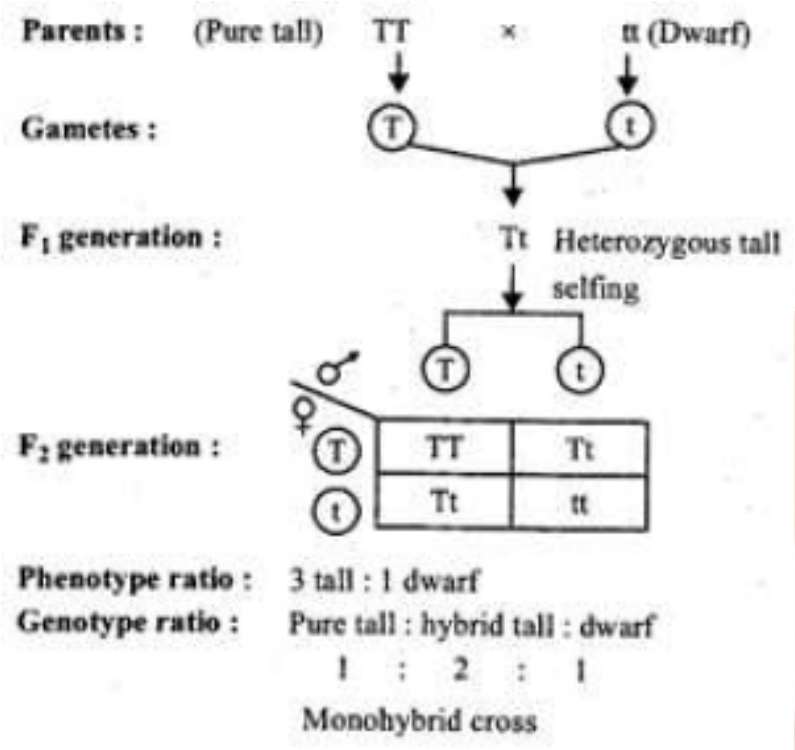

This shows that the dominant trait expresses itself in both homozygous and heterozygous condition whereas the recessive trait expresses itself only in the homozygous condition on the absence of the dominant trait.

Question 5:
Define and design a test – cross?

Solution 5:
A cross between a plant with unknown genotype and the recessive parent is called as a test cross.

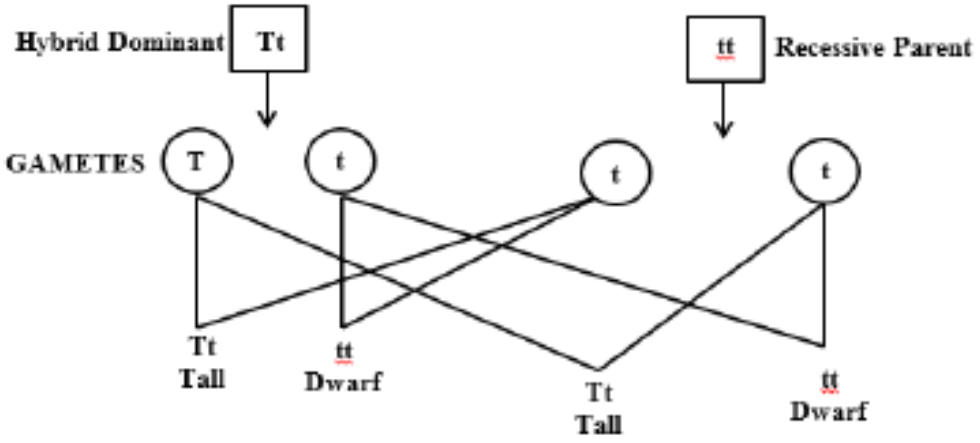

A test cross is used to determine the genotype of the unknown plant (i.e whether the plant is homozygous or heterozygous). If the progeny of the test cross show 1:1 ratio of Dominant: Recessive, then the unknown plant is heterozygous. However, if the progeny are all dominant, then the unknown plant is homozygous.

Question 6:

Using a Punnett square, work out the distribution of phenotypic features in the first filial generation after a cross between a homozygous female and a heterozygous male for a single locus.

Solution 6:

In the case of coat colour of guinea pigs, when heterozygous male guinea pigs (Bb) with black coat are crossed with homozygous female guinea pigs with white coat (bb), we can see that the male produces two types of gametes B and b while female produces one kind of gamete b. Through Punnett square we see genotypic and phenotypic ratio in F1 generation is same , i.e., 1:1

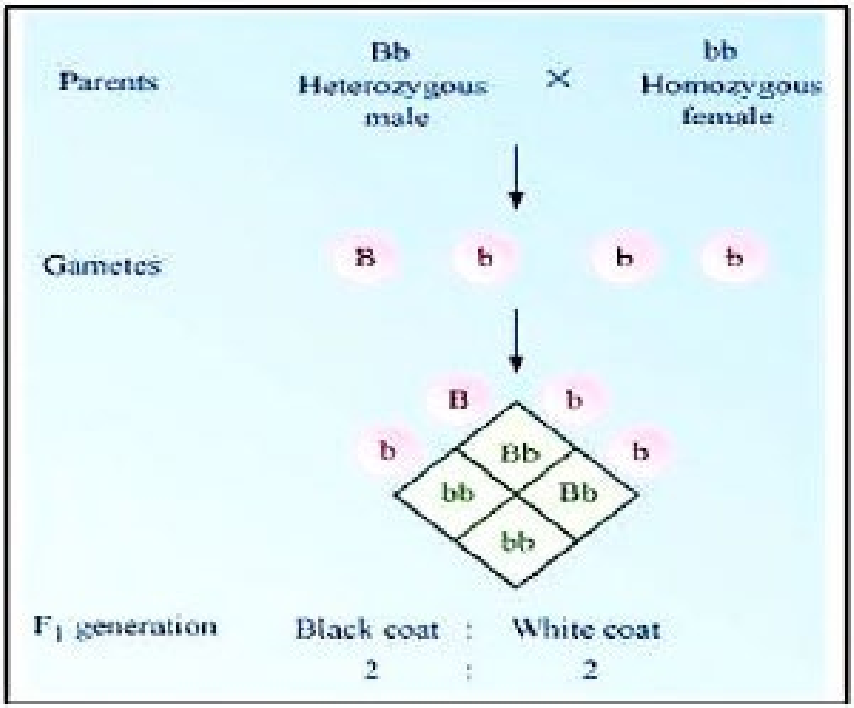

Question 7:
When a cross in made between tall plants with yellow seeds (TtYy) and tall plant with green seed (TtYy), what proportions of phenotype in the offspring could be expected to be
a) Tall and green.
b) Dwarf and green.

Solution 7:
When a cross in made between tall plants with yellow seeds (TtYy) and tall plant with green seed (TtYy), the phenotypic proportion in the offspring could be expected are three tall and green, one dwarf and green.

Parents → Tall Yellow Tt Yy × Tall Green Tt yy

Gametes → TY, Ty, tY, ty Ty ty

×

♂ \ ♀	Ty	ty
TY	TT Yy (Tall, yellow)	Tt Yy (Tall, yellow)
Ty	Tt yy (Tall, green)	Tt yy (Tall, green)
tY	Tt Yy (Tall, yellow)	tt Yy (Dwarf, yellow)
ty	Tt yy (Tall, green)	tt yy (Dwarf, green)

Phenotype ratio :

(a) Tall and green = 3/8 or 37.5%

(b) Dwarf and green = 1/8 or 12.5%

Question 8:

Two heterozygous parents are crossed. If the two loci are linked what would be the distribution of phenotypic features in F1 generation for a dihybrid cross?

Solution 8:

When two genes are inherited together, they are called linked genes and this phenomenon is called linkage. In case two genes are linked then there will be no segregation of alleles and the alleles will be inherited together functioning a single gene. If two genes are completely linked, then the F1

generation will show only parental characters in the phenotype and no recombinants. In case of incomplete linkage there may exist few recombinants but the proportion of parental phenotypes will be more.

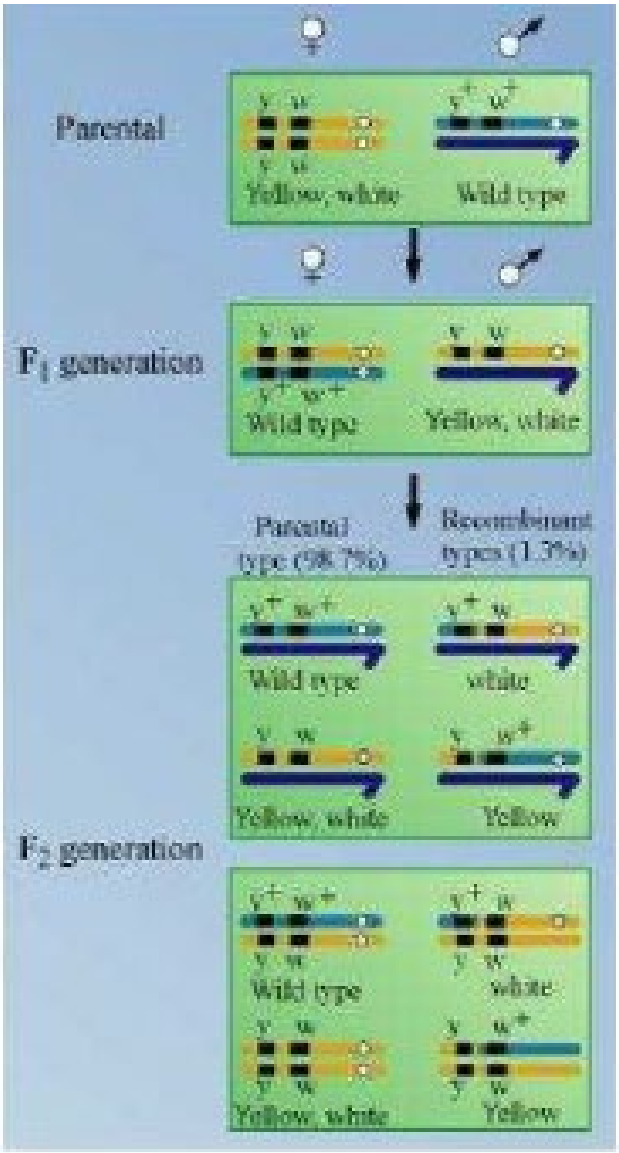

Question 9:
Briefly mention the contribution of T.H. Morgan in genetics.

Solution 9:

T.H. Morgan contributed immensely to the field of genetics through his studies on the fruit fly, *Drosophila melanogaster*. Some of his major contributions to the field of genetics are as follows:

1. He experimentally proved the Chromosomal Theory of Inheritance. This theory states that the genes are located on chromosomes and that chromosomes are inherited by daughter cells
2. He proved the existence of linked genes. Linked genes are genes located on the same chromosome. The theory of linkage says that genes that are located on the same chromosome are inherited together and are less likely to form recombinants.
3. He demonstrated that the distance between the genes in the chromosome affects their recombination rate. The more closely two genes are linked together the more likely that they will be inherited together. The more apart two genes are located in a chromosome the more likely that they will form recombinants.
4. He demonstrated crossing over in chromosomes during meiosis.
5. He demonstrated the X-linked inheritance in the fruit fly *Drosophila melanogaster* Due to his contribution many theories of genetics could be proved experimentally and for this reason he is called as the "Father of Experimental Genetics"

Question 10:

What is pedigree analysis? Suggest how such an analysis, can be useful.

Solution 10:

A kind of genetic analysis by which inheritance of a particular gene is traced in the family of a person is called as Pedigree Analysis. It is done by means of a pedigree chart which is a scientific chart of ancestors drawn with the help of certain specific symbols to indicate male, female, carrier, disease, etc. Pedigree analysis helps in:

1. To analyse and predict if the gene is present in homozygous or heterozygous condition.
2. Analysis of the inheritance of the said gene over various generations of the same family.
3. To understand if the specific genetic disorder is caused due to the dominant or the recessive gene.
4. To analyse the origin of the said disease in the family and try to determine its cause.
5. To predict the possibility of inheritance of this gene in future generations and the probability of the same.
6. To provide genetic counselling to the families with high risk of different genetic disorders like haemophilia, sickle cell anaemia, etc. By studying these charts genetic counsellors can help in preventing certain genetic disorders like haemophilia, sickle cell anaemia in future generation of that family.

Question 11:

How is sex determined in human beings?

Solution 11:

Human beings show XY type of sex determination. In human being, sex chromosomes of female is XX while those of male is XY. The female can produce gametes containing only X

chromosomes, whereas males can produce gametes containing either X or Y chromosomes. When Y chromosome containing gamete of male fertilizes with either X containing gamete of female, foetus will be a male. When X chromosome containing gamete of male fertilizes with either of female gamete, foetus will be a female.

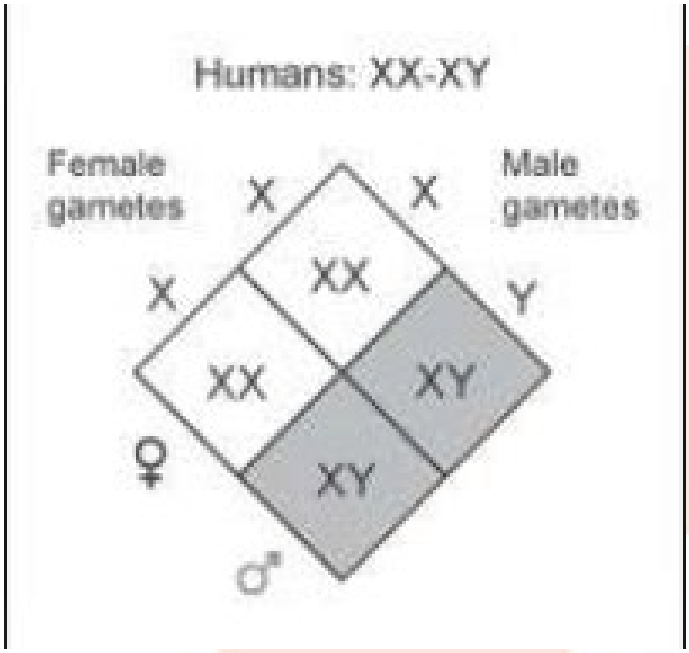

Question 12:
A child has blood group O. If the father has blood group A and mother blood group B, work out the genotypes of the parents and the possible genotypes of the other offspring.

Solution 12:
Blood group in human is controlled by three kinds of alleles I^A, I^B and i. I^A and I^B are codominant whereas I is recessive. I^A codes for blood group A whereas I^B codes for blood group B. O blood group is coded by the i allele.

A person with blood group A can have two possible allele combinations- $I^A I^A$ or $I^A i$

A person with blood group B can also have two combinations $I^B I^B$ or $I^B i$

When both I^A and I^B are present then the blood group will be AB and when both of these are absent then the blood group will be O (ii)

In the above case since the father and mother have dominant alleles and yet the child shows the recessive phenotype, the dominant A and B alleles in the parent must be present in the heterozygous condition. This is because if the alleles were present in homozygous condition in any of the parent then the child would show dominant phenotype and not the recessive phenotype

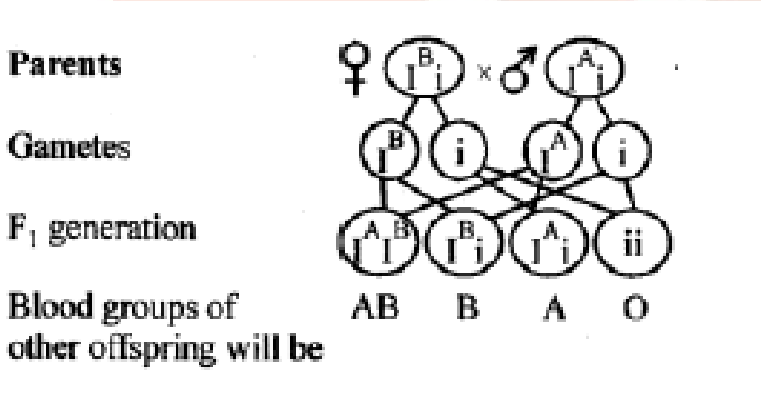

Therefore, we can see that in the above situation the other offspring could show A, B or AB blood group.

Question 13:

Explain the following terms with example

a) Co-dominance

b) Incomplete dominance

Solution 13:
a) When both the contrasting alleles of a gene pair are equally expressed it is called as codominance. E.g. human blood group- both A and B are equally dominant and when present together exhibit the AB blood group instead of either A or B
b) Incomplete dominance is when a dominant allele does not completely mask the effects of a recessive allele, and the organism's resulting physical appearance shows a blending of both alleles. It is also called semi-dominance or partial dominance. E.g. Flower colour in snapdragon plant. Red flower colour (R) is incompletely dominant over the white(r). When both alleles R and r are present together, R is unable to completely suppress r and therefore the resulting phenotype is pink colour flower.

Question 14:
What is point mutation? Give one example.

Solution 14:
When mutation occurs in single base pair of DNA it is termed as point mutation. e.g., Sickle cell anaemia - there is substitution of glutamic acid by valine in the sixth position of the beta globulin chain of haemoglobin leading to formation of sickle shape RBCs instead of biconcave RBCs

Question 15:
Who had proposed the chromosomal theory of inheritance?

Solution 15:
Sutton and Boveri in 1902 proposed the chromosomal theory of inheritance. This states that chromosomes act as vehicles for the inheritance of genes.

Question 16:
Mention any two autosomal genetic disorders with their symptoms.

Solution 16:
a) Sickle cell anaemia – When because of point mutation there is substitution of glutamic acid by valine in the sixth position of the beta globulin chain of haemoglobin, the biconcave shape of haemoglobin converts into sickle shape. This leads to decreased oxygen transport in blood, weakness

b) Phenylketonuria – Person affected from phenylketonuria lacks an enzyme which converts amino acid and phenylalanine into tyrosine. Then this phenylalanine accumulates and converts into phenyl pyruvic acid and other derivatives. This disease causes mental retardation. Due to their poor absorption in kidney they are excreted in the urine.