Proceedings of the 2024 Winter Simulation Conference
H. Lam, E. Azar, D. Batur, S. Gao, W. Xie, S. R. Hunter, and M. D. Rossetti, eds.

BUILDING A DIGITAL TWIN OF A CNC MACHINE TOOL

Deogratias Kibira[1], Guodong Shao[1], Rishabh Venketesh[1], and Matthew J. Triebe[1]

[1]Engineering Laboratory, National Institute of Standards and Technology, Gaithersburg, MD, USA

ABSTRACT

Digital twin technology can positively transform manufacturing decision-making including supporting optimal utilization of machine tools on the shop floor. However, building digital twins faces several challenges, such as, data management, data security, connectivity, and insufficient standardized modeling procedures. Recently, the International Organization for Standardization (ISO) published a new series of standards, ISO 23247 Digital Twin Framework for Manufacturing, to provide guidance for implementing these aspects of digital twins in a manufacturing environment. This paper provides a case study of using the ISO framework to build a digital twin of a Computer Numerical Control (CNC) machine tool. This research demonstrates how the ISO standard, system modeling, machining data standards, messaging protocols, data processing, and data visualization tools support the creation of a digital twin of a CNC machine tool. The approach of this paper can be used by manufacturers to implement their digital twin applications.

1 INTRODUCTION

A digital twin represents the structure, functions, and behavior of a physical system, product, phenomenon, or process in the digital world in real-time. Digital twins are being implemented in many fields, including manufacturing, aerospace, healthcare, automotive, and supply chains. Within manufacturing, digital twins can support decision-making during any phase of a product life cycle (from product requirements to disposal) and at any decision level of a manufacturing system. Digital twins use data collected from the physical system and perform analytics, making it possible to anticipate future behavior and performance in near real-time. This predictive potential can be harnessed for tasks such as prognostics and health management and production planning. The focus can also be on process sustainability, cleaner production, or efficient energy use (Nasir et al. 2021). Computer Numerical Control (CNC) machine tools are the cornerstone of modern manufacturing systems and are becoming more sophisticated with advanced technology. However, the productivity of these machines and the product quality depend as much on their capacity as on how efficiently they are operated. A digital twin can be exploited to improve a machine tool during its design, commissioning, operation, and maintenance.

Significant research is currently being carried out to develop and advance methods, tools, approaches, and standards for digital twins (Alnowaiser et al. 2023). Correspondingly, research for virtualization and implementation of digital twins in machine tool operations is increasing (Stan et al. 2023). A digital twin of a machine tool can be focused on volumetric accuracy, machining process, machine kinematics, structural dynamics, control systems, or cutting tool conditions (Iñigo et al. 2021). All processes involved in digital twin development, including data collection, communication, digital twin modeling, simulation, data analytics, and control command feedback, are complicated and challenging (Rasheed et al. 2020). Hence, digital twin implementations are often costly as they may require solution providers to develop and maintain the digital twin for the client. This paper presents a method of building a digital twin of a CNC machine tool based on available standards and tools. The focus is on the mechanical system of the machine tool. The activities for realizing a digital twin are demonstrated with a laboratory-size machine tool while machining a designed part. The scope of this paper is to build a digital model of the machine tool and create

a data pipeline for streaming data from the physical machine tool to the digital twin. Standards for realizing the digital twin models and data interfaces have been identified and applied. The ISO 23247 standard provides guidance and a framework for the digital twin development process (ISO 2021a).

Current approaches for building a digital twin are still on an individual piecemeal basis and tailored to a given application. In addition, developing a digital twin for a manufacturing system is often carried out using simulation tools (Sturrock 2019). These tools usually lack the interfaces needed to receive data directly from the physical system. Efforts to overcome this limitation for commercial simulation software products are described. The rest of the paper is organized as follows. Section 2 gives background and motivation to the research, Section 3 covers a literature review of the published relevant research, Section 4 discusses the digital twin development process, Section 5 describes the data pipeline from the physical machine tool to the digital counterpart, Section 6 presents data visualization, which is a precursor to decision-making, and Section 7 provides the summary and conclusion.

2 BACKGROUND AND MOTIVATION

Realizing a digital twin for a manufacturing system has been described as challenging from both technological and commercial points of view (Singh et al. 2021). Examples of obstacles include lack of standards and tools, and the time and cost, which affect small and medium-sized manufacturers (SMM). As a result, practical implementations of digital twins have not caught up with the increasing literature (Sharma et al. 2022). Further, the number of case studies decreases with an increasing level of integration between the physical system and its digital counterpart (Kritzinger et al. 2018).

The motivation for this work comes after the observation that literature lacks sufficient information on successfully building a digital twin using available software and open standards. Even with the published digital twins few development details or proofs of concept are published. More examples of implementations of digital twins are needed for SMMs to leverage for their benefit. This research is based on a laboratory-scale testbed at the National Institute of Standards and Technology (NIST). The testbed equipment is arranged into a workcell and comprises robot arms, a CNC machine tool, a coordinate measuring machine (CMM), and safety systems. The focus of this paper is the development of a digital twin for the CNC machine tool. The main objective of this paper is to show how the MTConnect standard and Message Queuing Telemetry Transport (MQTT) support the integration of digital twin components. Real-time data streaming from the machine is analyzed, visualized, and used by the digital twin to support decision-making. The machine tool in the laboratory is a Pocket Numerical Control (Pocket NC) V2-10, a 5-axis desktop milling machine. Figure 1a shows the Pocket NC machine tool and the 5-axes of movement and Figure 1b shows the major components. Section 4 provides more details of this machine tool.

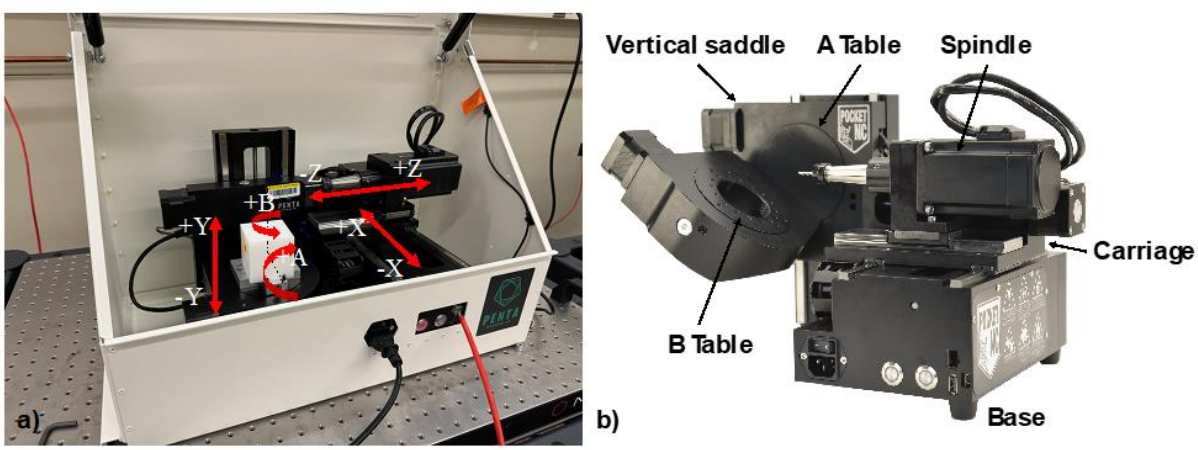

Figure 1: The Pocket NC V2-10 machine tool – a) axes of movement and b) major components.

3 RELATED WORK AND CONTRIBUTION

This review starts with an overview of relevant standards and frameworks for digital twins. It proceeds with describing tools for modeling digital twins and presents some use cases of digital twins for machine tools.

3.1 Standards and Frameworks

A framework that supports building digital twins for machining processes was proposed by STEP Tools, Inc. (STEP Tools 2016). This interoperability framework allows manufacturing execution in real time, using standards such as STEP-NC, MTConnect, and Quality Information Framework (QIF). A model developed in STEP-NC enables integration of data that describe the geometry, tolerances, machining operations, and inspection results and availing it in a single format. MTConnect provides the process monitoring data. QIF brings together inspection results and quality assessment of parts. QIF investigates the machining process from the product point of view. In this paper, we are interested in the CNC machine tool point of view and the ISO 23247 standard can guide building such a digital twin.

The ISO 23247 standard (ISO 2021b) provides a standardized architecture framework for digital twins for manufacturing applications. The framework is composed of four domains represented by four application layers. See Figure 2 for a functional view of the framework. The first layer from the bottom consists of the observable manufacturing elements (OMEs) for which a digital twin is to be built. These are the devices, machines, materials, personnel, products, and other elements from which data are collected. The second layer is the data collection domain and device control entity (DCDCE) and sensors that collect data from the OMEs. This layer also includes control interfaces. In the third layer, OMEs are modeled and synchronized to provide services such as monitoring, simulation, data analysis, prescription, and prediction. This domain constitutes the digital twin core entity. Finally, there is the user domain at the top, which includes people, devices, or other systems that use the services and applications provided by the digital twin entities. Section 4 describes how this framework supports digital twin development for the Pocket NC.

3.2 Technologies and Tools

Lai et al. (2021) identify digital twin modeling, data acquisition and management, and data fusion technologies as essential tasks for digital twin development. Digital twins for machine tools need appropriate modeling tools to represent the system in the virtual world. Software used for CAD modeling, such as Autodesk Inventor, CATIA, AUTOCAD, SOLIDWORKS, and Creo can help achieve the creation of a 3D virtual assembly of a machine tool and the workshop environment. These models are often used in conjunction with simulation tools. Qi et al. (2021) review technologies and tools for enabling digital twins including machine learning and Artificial Intelligence (AI) to support decision-making. There are also several tools marketed as digital twin software for manufacturing with interface capabilities but only stream and model system data for visualizations, lacking capabilities to model the system in the same way as established simulation tools. It has been suggested that to meet all requirements for a digital twin, dedicated modeling platforms are needed (Spaney et al. 2023).

3.3 Machine Tool Digital Twins

Digital twins for machine tools are built at any phase of their life cycles, including design, operation, maintenance, and end-of-life. Armendia et al. (2019) introduce the concept of cyber-physical machine tools (CPMTs) to take advantage of technologies such as IoT, cyber-physical systems (CPS), and cloud computing. Various models are used in digital twins, including multi-body simulation and finite element analysis. Lai et al. (2021) present a review of digital twin modeling for a machine tool. The focus is on the enabling of tools for a digital twin, emphasizing visualization, data acquisition methods, and data management. Luo et al. (2018) demonstrated a digital twin modeling method for CNC machine tools. The method is applied to a CNC milling machine. The results show potential applications including monitoring and predictive maintenance, when used in conjunction with machine learning.

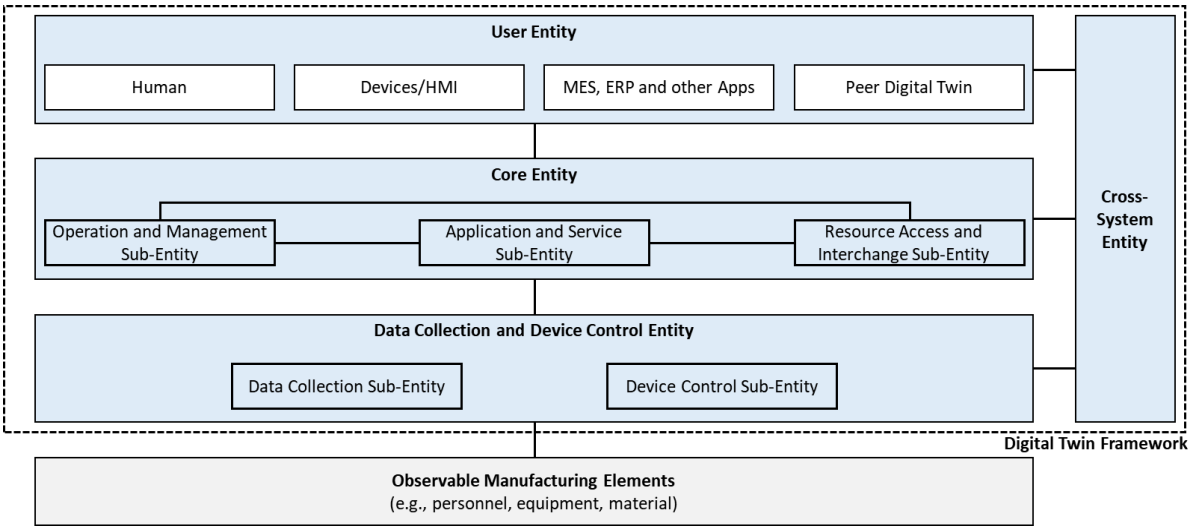

Figure 2: Functional view of the digital twin reference model (ISO 2021b).

Liu et al. (2018) present a digital twin as a core component of CPMTs. The digital twin uses open communication standards, including MTConnect and Open Platform Communications - Unified Architecture (OPC UA). Real-time machining data are collected from the machine using sensors, PLC, and IoT-based data acquisition systems. These data are converted into a common format. Two applications of the machine tool digital twin (MTDT) are used to demonstrate the approach. These include real-time condition monitoring and augmented reality (AR) - assisted machining visualization and simulation.

The review shows a lack of common approaches, terminology, architecture, and key tools for manufacturing digital twin applications. This has contributed to limiting the understanding of how to implement digital twins and their widespread adoption, including those for machine tools (Spaney et al. 2023). There is also a difficulty in modeling the machine tools since many modeling tools do not directly accept streaming data. The problem of real-time data input is further explored while describing the modeling process for the Pocket NC.

4 DIGITAL TWIN DEVELOPMENT

This section describes the instantiation of the ISO 23247 framework for the Pocket NC machine tool in operation. The framework supports the applications of IoT infrastructure for data collection, communication protocols, and information flows between entities of different domains, i.e., OMEs, Data Collection and Device Control, Digital Twin Core, and User layers. See Figure 3.

4.1 Observable Manufacturing Elements

The OMEs constitute the Pocket NC, cutting tool, and workpiece. Figure 1b shows the major components of the Pocket NC. The Pocket NC mill executes tasks through three translational and two rotational operations. The five axes allow the milling of design features that are not perpendicular to the surface of the workpiece. The interface for the machine is accessible via an IP address. In summary, the moving components of the Pocket NC machine tool are:

(1) Carriage: holds the spindle and controls cutting tool movement (moves along the X-axis)
(2) Vertical saddle: holds the A table (moves along the Y-axis)
(3) Spindle: holds the tool while rotating on an axis (moves along the Z-axis)
(4) A Table: the work area on the machine (rotates about the X-axis)
(5) B Table: holds the Pocket NC-custom vice that holds the workpiece (rotates about the Y-axis)

4.2 Data Collection and Device Control Entity

Data are collected from the Pocket NC controller. The MTConnect adapter in Python is installed on the Pocket NC controller. The Pocket NC is directly wired to an ethernet switch, which is then wired directly to the lab's wireless router. Also wired directly to the lab router is a Linux computer that hosts the MTConnect Agent. This enables a local subnet in which all the manufacturing equipment, including the Pocket NC, communicates with a central data aggregator and each other.

4.3 Digital Twin Entity

4.3.1 Modeling Process and Software

A virtual model of the geometry, attributes, and behaviors of a physical system helps improve the visualization of a digital twin. The CAD models for the Pocket NC are provided in the STEP (Standard for the Exchange of Product model data) format. The models of individual components are assembled to create a digital model of the machine. The assembling process specifies the relative motion between machine components and the travel limit along each axis. The scope of data and analysis for this paper assumes rigid bodies of the machine tool elements to support multibody simulation (Altintas et al. 2005). Multibody simulation analysis allows for the representation of the behavior of the machine, including tool paths, the machine itself, and the workpiece.

The software tool used is Altair Inspire Motion, which provides the ability to model functional and directional behavior, among others. Our scope and focus are on functional behavior. Figure 4 shows the model of the Pocket NC in Inspire Motion. With this model, you define the task for the machine, and the software tool solves the equations of motion for the required forces. However, it is more common to provide forces at the actuators and torques at the motors and the resulting motions being calculated.

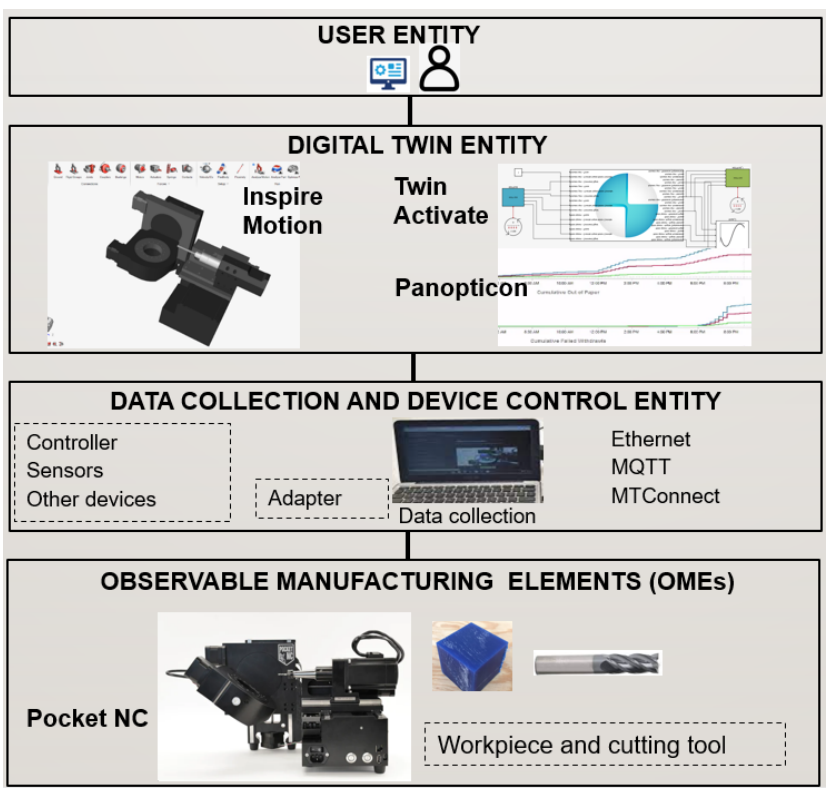

Figure 3: Digital twin architecture for the Pocket NC.

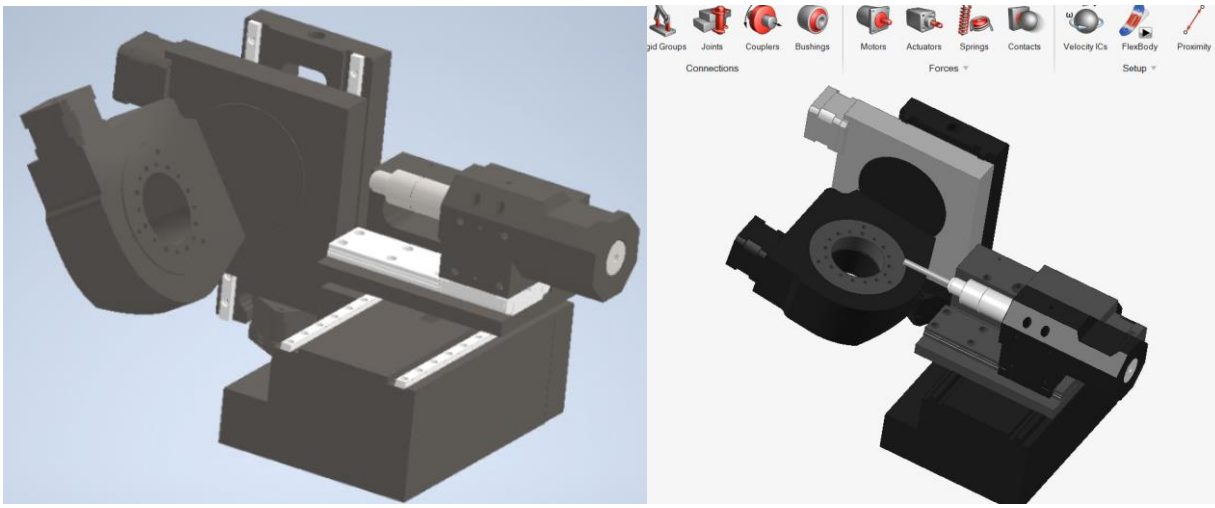

Figure 4: The Pocket NC in the CAD workspace and the digital twin in Inspire Motion.

4.3.2 Real-time Digital Twin Modeling

A digital twin requires real-time or near real-time input of data into the digital model. However, MotionSolve (the solver of Inspire Motion) does not provide this capability. This is a limitation of the software. A workaround is to Co-Simulate the model developed in Inspire Motion with Twin Activate. Co-Simulation is where simulations of two or more models are carried out within their own simulation environments but communicating at fixed time steps (Basnet et al. 2020). This approach enables our Inspire models and Twin Activate models to communicate with each other during simulation.

Twin Activate has a real-time data input capability, which is queried from the MTConnect adapter and made available for the Pocket NC model in Inspire Motion. This real-time input of data supports digital twin development and deployment. Co-Simulation also enables modeling virtual sensors in the digital twin which generate additional data required for building machine learning models. The data pipeline from the physical machine to the digital representation of the Pocket NC is explained in the next section.

4.4 Use Case

The process of acquiring data from the Pocket NC during operation requires developing a use case. The use case scenario consists of machining a designed part and acquiring the machine's operational data. The part design is shown in Figure 5. The design is produced using Autodesk Inventor, a Computer Aided Design (CAD) and Computer Aided Manufacturing (CAM) software platform. Each CNC machine tool requires a G-code program that is slightly different and tailored to the specific mechanics of the machine. Therefore, we use a "Post Processor" to convert the CAM software's code into the G-code suitable for the Pocket NC. Autodesk Inventor allows the user to simulate the machine's movements and cutting of the raw material. The result was a tool path to clear the bulk material and produce the final geometry of the part that includes the pocket, slots, holes, and edge chamfering seen in Figure 5. The stock of material is fixed to table B of the Pocket NC using the vice supplied with the machine. The program is obtained and loaded as a .NGC file and copied to the machine's computer using the Pocket NC user interface.

The workflow starts with the use case scenario. After the design is produced, the Pocket NC is set up to start machining the design. The program is copied to the machine tool computer and the feedstock is machined into the required design part. A digital twin of the Pocket NC is updated with the data streamed from the physical machine. As processing progresses, the digital twin data are streamed, analyzed, plotted, and compared with baseline data to evaluate the state of the workcell.

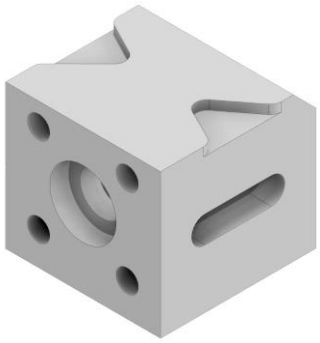

Figure 5: The part design.

5 DATA PIPELINE

Data pipelines convey data from a data source to where it is stored or used. This section describes how the pipeline is developed to acquire machine tool data and availing it in a format suitable for the digital twin.

5.1 Data Flow

The data source is the Pocket NC mill, and the user of the data is its digital twin. Figure 6 is a simplified illustration of the data pipeline. The Figure is a simplified illustration of the collection method, communication protocols, and streaming into the digital twin.

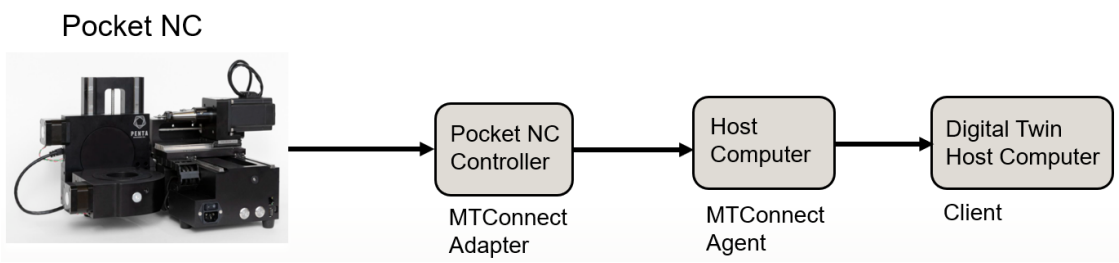

Figure 6: Data pipeline for Pocket NC digital twin.

5.2 Data Acquisition and Communication

Systems that implement the MTConnect standard provide the required interfaces to collect data from the machine tool during operation. For a list of MTConnect Data Tags with their respective contextual information, refer to Part 2.0 of the MTConnect Standard – the Device Information Model (AMT 2024). MTConnect is an information model for data management from a device and provides interfaces by extracting data and making it available in a standard format, i.e., eXtensible Markup Language (XML). Two elements are crucial for MTConnect: the adapter and the agent. The adapter serves as a data collection element from the equipment controller or external sensors while the agent collects data from one or more adapters. MTConnect enables data transmission from manufacturing equipment and allows communication from machine to machine and machine to operator. The MTConnect adapter in our use case is deployed on the Pocket NC as multiple Python scripts.

The adapter transforms the raw machine data into Simple Hierarchical Data Representation (SHDR) with the form “Timestamp|name|value|name|value”. SHDR is the underlying protocol of MTConnect. The data are then sent to a central agent for the workcell via socket-socket programming. The MTConnect agent used in this work was developed in C++ by the MTConnect Institute. The agent is installed on a computer

connected to the same network in the workcell. All adapters on the machines in the workcell are connected to the agent. In this paper, the data are streamed into the digital model of the Pocket NC (client).

5.3 Client-side Integration and Co-Simulation

Data from the MTConnect agent are queried and input into the digital representation of Pocket NC through Co-Simulation with Twin Activate. This software has a "MotionSolveSignals" block that implements Co-Simulation by treating the MotionSolve model as a plant and specifying the input and output signals.

A wide variety of data are available for collection from the machine tool, including motion, energy, vibration, load, power consumption, pressure, temperature tool position, controller mode, spindle speed, and path feed. Motion data is associated with the five axes of the Pocket NC: absolute X position, absolute Y position, absolute Z position, absolute A position, and absolute B position.

These data are streamed into Twin Activate using MQTT, which is a standard messaging protocol for IoT. MQTT supports bidirectional communication and is based on a publisher/subscriber architecture. Every message has a topic. The publisher sends data related to a topic each time the data becomes available, and the subscribers to that topic receive data updates that have taken place. The MQTT protocol follows the publisher/subscriber schema. The clients do not communicate directly, and all the messages are sent through the broker. The broker is the de-facto server whose role is to retrieve messages. A custom block in Python has been written to read PocketNC operational data from the MTConnect agent and makes it available for the MQTTPUB block in Twin Activate.

The Mosquitto broker (Light 2017), which is used in this research, provides standards-compliant server and client implementations of the MQTT messaging protocol. The integrated simulation software has two blocks for publishing and subscribing data: MQTTPUB and MQTTSUB. The MQTTPUB block (publish) formats the data within an object and associates it with a topic. This data becomes available to any MQTTSUB block (subscribe) within the network that is subscribed to the topic. A MQTTSUB block is connected to the MotionSolveSignals block. This block represents the Pocket NC within the integrated simulation and consumes the data for updating the Inspire Motion model. Figure 7 shows the Co-Simulation as the digital twin of the Pocket NC.

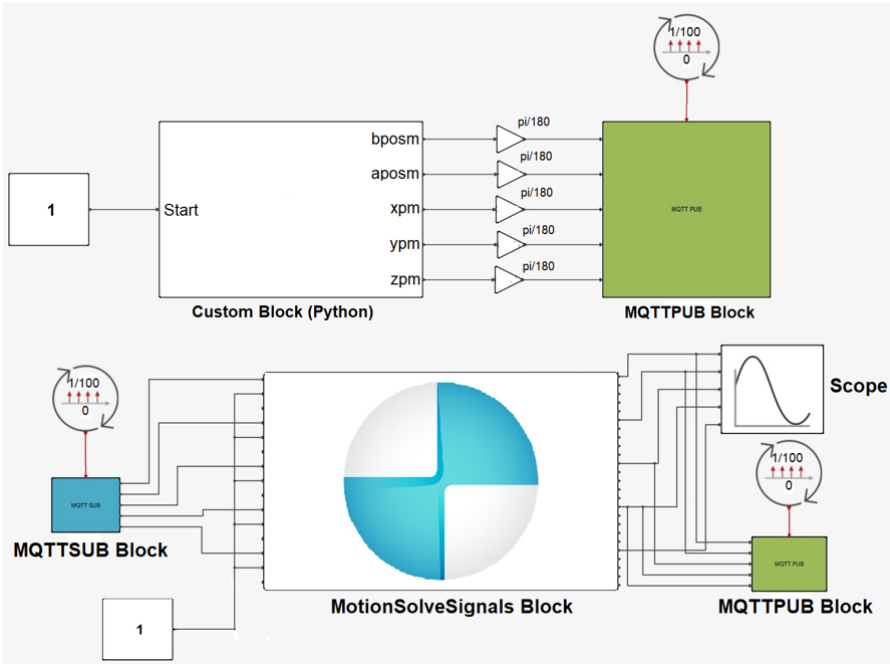

Figure 7: The Co-Simulation model in Twin Activate.

6 DATA PUBLISHING, VISUALIZATION, AND FUTURE WORK

This section describes the activities to export data from the digital models of the Pocket NC for analysis and visualization, as well as planned future work to complete building the digital twin. It also discusses the tool used for analyzing and visualizing streamed data from the digital twin of the Pocket NC.

6.1 Data Publishing

Data output from the Co-Simulation are published to a topic and Panopticon, the software used for real-time processing of the data, also subscribes to the same topic. This software tool provides visual data analysis, filtering, and alerting enabling peer comparisons and identifications of correlations, trends, exceptions, and anomalies. A web server is required for handling client connection negotiation, security, routing, caching, and other essential functions of a web server. In this paper, we use Apache Tomcat, a Java-based web application container created to run servlet and JavaServer Pages web applications (Apache Foundation 2024).

The streamed data are the commanded positions to the CNC Machine tool. It is desired to learn if the behavior of the digital model of the machine tool during operation reflects the commanded data. This approach is a step towards the validation of the data input and of the digital twin. The data before input to the Twin Activate and the motions exhibited by the digital twin are graphed together. Figure 8 is a plot of the X and A axes positions and position errors within the Panopticon plot. The program runs for 3734 seconds to machine the designed part, although only data from the 3000th second to completion is charted. The plot shows that large errors coincide with changes in the direction of motion or rotation about the axes. A similar pattern is observed for all the other axes. Synchronizing position control in a robot program with the digital twin would eliminate or reduce this error.

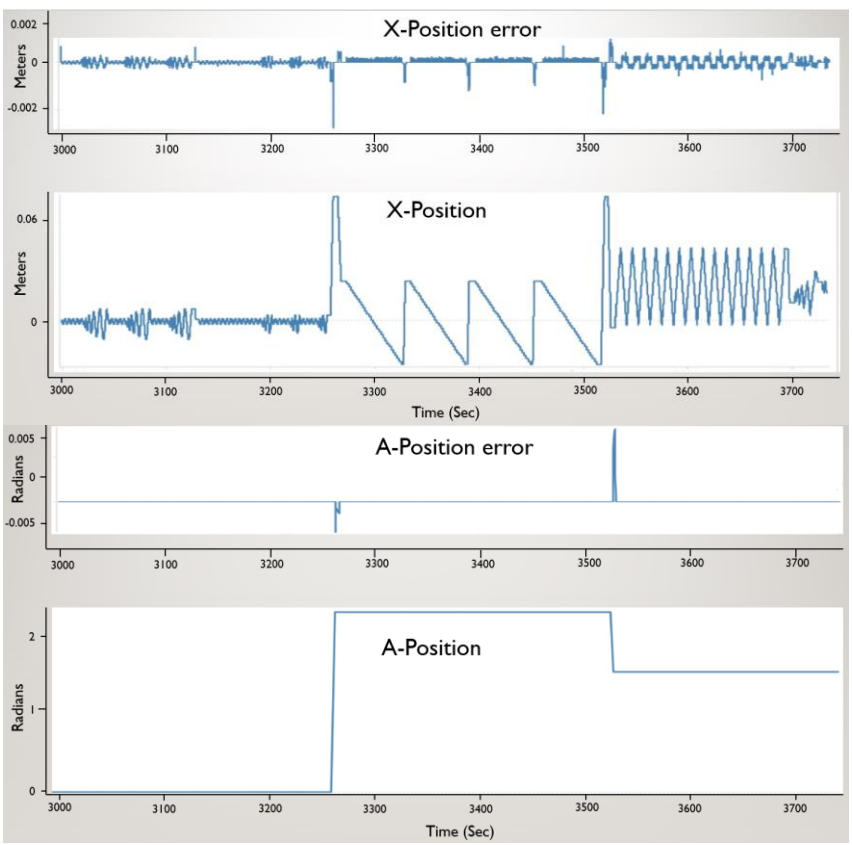

Figure 8: Position and position error plot for X and A axes.

6.2 Future Work

The data collected from the Pocket NC represents the state of the machine. Future work will involve analyzing this streaming data to understand the state of the system and predict future system states through the digital twin. Data will be stored and made available for future analysis. The storage database or message queue. Flat files include Excel, CSV, Text, XML, and SVG.

Figure 9 is a general framework of the digital twin. At the core is the digital twin of the machine tool for a) representing the static and dynamic properties of the machine tool and maintaining consistency with its physical parts, b) receiving real-time data, and c) enabling bi-directional communication with other components in the workcell, including physical robot arms, CMM, human-machine interfaces, and other facilities. Future work will develop user-defined code within the digital twin to generate additional data. Additional data items can also be specified as output from the digital model of the Pocket NC. These data will be fused for streaming, analytics, and visualization.

When data are analyzed in the digital twin, important information, such as the progress of the machining process, is determined. This information is the basis for making decisions as machining continues from one workpiece to another. Other information could indicate that the machine requires maintenance after a given number of cycles or predict that the machine is destined to fail. The decision is made when to carry out the required maintenance activity. On the other hand, information can show that the state of progress in production is not proceeding according to the original plan or that there is an increase in energy consumption. A decision can then be made to increase cutting speed or change the machining strategy. These insights need to be communicated to the physical world through a feedback loop from the digital world to the physical machine. Parameters in the machine tool that are related to the digital twin objective, such as bearing friction for predictive maintenance, will be identified so that they are synchronized between the physical world and the digital twin.

The feedback to the physical system from the digital twin depends on the level of integration and automation of the process that determines actionable recommendations. A human could still be in the loop to evaluate and execute recommendations from the digital twin. For automated feedback, the commands from the digital twin would have to be automatically sent to the controller. The necessary protocols will be investigated in future work.

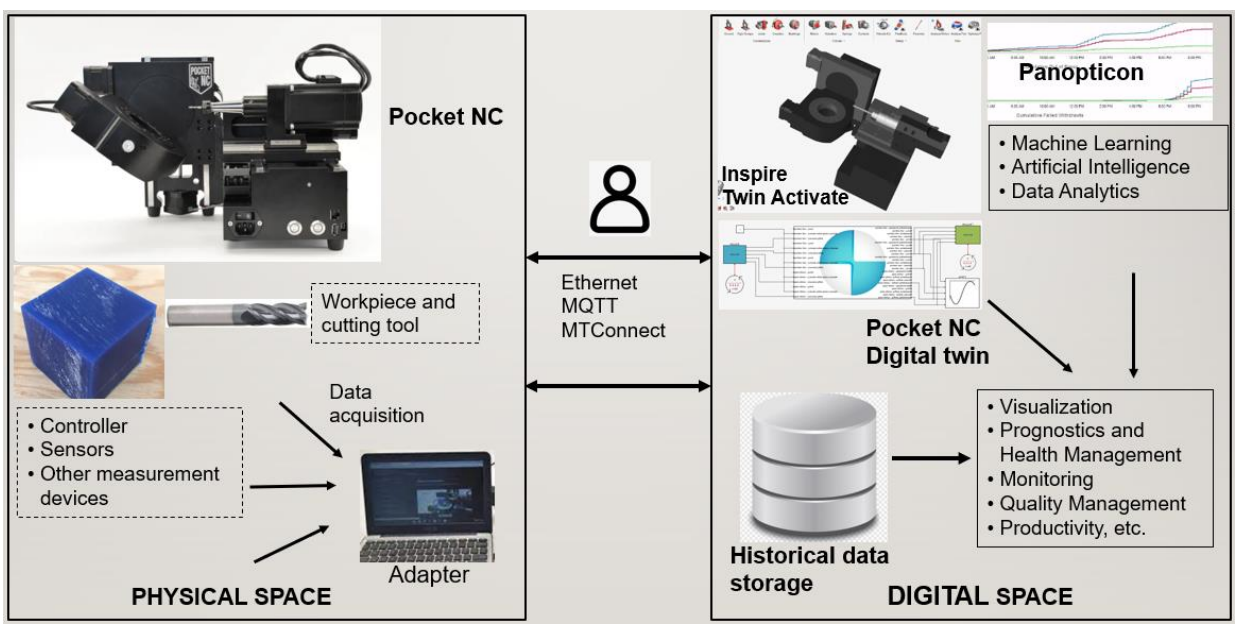

Figure 9: Framework of a digital twin for the Pocket NC.

7 SUMMARY AND CONCLUSION

Digital twins are changing how manufacturing systems and manufactured products are designed and operated. During design, digital twins use data from similar products and data that becomes available during product investigation in a virtual world to support decision-making for the engineer. During operation, the digital twin represents the physical world in real-time to monitor, diagnose, predict, and prescribe the best course of action. Recent advances in data collection, data analytics algorithms, data storage, and computation enable digital twins.

Manufacturers have been building digital twins using custom frameworks and tools in their organizations. Such frameworks may not be reusable or relevant in different situations. The tools available are often hard to customize to represent the manufacturing physical world in a digital environment because they usually lack interfaces for directly inputting real-time streaming data. Some researchers have advocated for specialized tools for digital twins. Many manufacturers have also relied on solution providers with specialized tools to implement and maintain their digital twins at high expense. Software tools, interface standards, and skills are needed to realize a digital twin. ISO 23247 is a digital twin standard that supports building digital twins for different manufacturing environments. This paper has described a method of creating a digital twin of a Pocket NC machine tool based on the ISO 23247 standard and available interface protocols.

Future work for this research will seek to model the data to provide actionable recommendations and integrate all elements in the workcell. A protocol will also be identified to implement actions on the physical elements, whether a human is in the loop or fully automated. The research work is ongoing, but the paper has shown how to realize a digital twin using tools that, though not explicitly developed for digital twins, can be interfaced with data acquisition and messaging protocols to enable data processing, analysis, visualization, and decision-making.

DISCLAIMER

Certain commercial products and systems are identified in this paper to facilitate understanding. Such identification does not imply that these software systems are necessarily the best available for the purpose. No approval or endorsement of any commercial product by NIST is intended or implied.

REFERENCES

Alnowaiser, K.K. and M. A. Ahmed. 2023. "Digital Twin: Current Research Trends and Future Directions". *Arabian Journal for Science and Engineering* 48(2):1075-1095.

Altintas, Y., C. Brecher, M. Weck, and S. Witt. 2005. "Virtual Machine Tool". *CIRP Annals* 54(2):115-138.

Apache Software Foundation. 2024. https://tomcat.apache.org, accessed 20th June.

Armendia, M., A. Alzaga, F. Peysson, T. Fuertjes, F. Cugnon, E. Ozturk, and D. Flum. 2019. "Machine Tool: From the Digital Twin to the Cyber-Physical Systems". In *Twin-Control: A Digital Twin Approach to Improve Machine Tools Lifecycle*, edited by M. Armendia, M. Ghassempouri, E. Ozturk, and F. Peysson, 3-21. Cham, Switzerland: Springer Nature.

AMT (Association for Manufacturing Technology). 2024. MTConnect R© Standard Part 2.0 – Device Information Model, https://www.mtconnect.org, accessed 7th March.

Basnet, B. and P. Pillay. 2020. "Co-Simulation Based Electric Vehicle Drive for a Variable Flux Machine". In *Proceedings of the IEEE Transportation Electrification Conference & Expo (ITEC)*, June 23rd – 26th, Chicago, IL, USA, 1133-1138.

Iñigo, B., B. Colinas-Armijo, L. N. L. de Lacalle, and G. Aguirre. 2021. "Digital Twin-Based Analysis of Volumetric Error Mapping Procedures". *Precision Engineering* 72:823-836.

ISOa. 2021. ISO 23247-1: Automation Systems and Integration - Digital Twin Framework for Manufacturing - Part 1: Overview and General Principles, https://www.iso.org/standard/75066.html, accessed 17th February.

ISOb. 2021. ISO 23247-2: Automation Systems and Integration - Digital Twin Framework for Manufacturing - Part 2: Reference Architecture, https://www.iso.org/obp/ui/en/#iso:std:78743:en, accessed 17th February.

Kritzinger, W., M. Karner, G. Traar, J. Henjes, and W. Sihn. 2018. "Digital Twin in Manufacturing: A Categorical Literature Review and Classification". *IFAC-PapersOnline* 51(11):1016-1022.

Lai, X., Y. Zhou, L. Jiang, and G. Ding. 2021. "A Review: Machine Tools Digital Twin Modeling and Application". In *Proceedings of the 26th International Conference on Automation and Computing (ICAC)*, September 2nd – 4th, Portsmouth, UK, 1-6.

Light, R. A. 2017. "Mosquitto: Server and Client Implementation of the MQTT Protocol". *Journal of Open-Source Software* 2(13): 265.

Liu, C., H. Vengayil, R. Y. Zhong, and X. Xu. 2018. "A Systematic Development Method for Cyber-Physical Machine Tools". *Journal of Manufacturing Systems* 48:13-24.

Luo, W., T. Hu, W. Zhu, and F. Tao. 2018. "Digital Twin Modeling Method for CNC Machine Tool". In *Proceedings of the IEEE 15th International Conference on Networking, Sensing and Control (ICNSC)*, March 27th – 29th, Zhuhai, China, 1-4.

Nasir, V. and F. A. Sassani. 2021. "A Review on Deep Learning in Machining and Tool Monitoring: Methods, Opportunities, and Challenges". *Int. Journal of Adv. Manuf. Technology* 115:2683-2709.

Qi, Q., F. Tao, T. Hu, N. Anwer, A. Liu, Y. Wei et al. 2021. "Enabling Technologies and Tools for Digital Twin". *Journal of Manufacturing Systems* 58:3-21.

Rasheed, A., O. San, and T. Kvamsdal. 2020. "Digital Twin: Values, Challenges and Enablers from a Modeling Perspective". *IEEE Access* 8:21980-22012.

STEP Tools. 2016. Digital Thread and Digital Twin Demonstrations at Future of Flight, https://www.steptools.com/blog/20161005_digital_thread_demo, accessed 17th January 17th.

Sharma, A., E. Kosasih, J. Zhang, A. Brintrup, and A. Calinescu. 2022. "Digital Twins: State of the Art Theory and Practice, Challenges, and Open Research Questions". *Journal of Industrial Information Integration* 30:100383.

Singh, M., E. Fuenmayor, E. P. Hinchy, Y. Qiao, M. Murray, and D. Devine. 2021. "Digital Twin: Origin to Future". *Applied System Innovation* 4(2):36.

Spaney, P., S. Becker, R. Ströbel, J. Fleischer, S. Zenhari, H. C. Möhring, A. K. Splettstößser, and A. Wortmann. 2023. "A Model-Driven Digital Twin for Manufacturing Process Adaptation". In *Proceedings of the ACM/IEEE International Conference on Model Driven Engineering Languages and Systems Companion (MODELS-C)*, October 1st – 6th, Västerås, Sweden, 465-469.

Stan, L., A. F. Nicolescu, C. Pupăză, and G. Jiga. 2023. "Digital Twin and Web Services for Robotic Deburring in Intelligent Manufacturing". *Journal of Intelligent Manufacturing* 34(6):2765-2781.

Sturrock, D.T. 2019. "Using Commercial Software to Create a Digital Twin". In *Simulation for Industry 4.0: Past, Present, and Future*, edited by M. M. Gunal, 191-210. Cham, Switzerland: Springer Nature.

AUTHOR BIOGRAPHIES

DEOGRATIAS KIBIRA is a Professional Research Experience Program (PREP) fellow in the Engineering Laboratory at the National Institute of Standards and Technology. His research interests are in sustainable manufacturing, digital twin development, virtual manufacturing environments, and PHM for smart manufacturing. He has a PhD in Manufacturing Engineering. His e-mail address is deogratias.kibira@nist.gov.

GUODONG SHAO is a Computer Scientist in the Systems Integration Division (SID) of the Engineering Laboratory (EL) at the National Institute of Standards and Technology (NIST). He manages the Digital Twins for Advanced Manufacturing project and focuses on generic guidelines and methodologies for implementing digital twins and relevant standards development and testing. He is a technical expert on relevant standards committees and a co-chair of the Digital Twin Interoperability Task Group (DTITG) in the Industry IoT Consortium (IIC). His email address is gshao@nist.gov.

RISHABH VENKETESH has a Bachelor of Science in Mechanical Engineering from Virginia Tech. He has been a full-time NIST Employee since 2021 and currently works in the Engineering Laboratory in the Systems Integration Division. Within the Division, he is assigned to work on the Digital Twin Project and belongs to the Life Cycle Engineering Group. His email address is rishabh.venketesh@nist.gov.

MATTHEW J. TRIEBE received his Ph.D. from Purdue University in Environmental and Ecological Engineering, where his work centered on reducing machine tool energy consumption through design. He is currently a Mechanical Engineering Researcher at the National Institute of Standards and Technology, where his research focuses on the intersection of circular economy, manufacturing, and digital twins. His email address is matthew.triebe@nist.gov.