Use Case Wi-Fi Alarm Speaker + [Touch or Gesture or Mouse] Alarm Source + Solar-Grid + IR Blaster

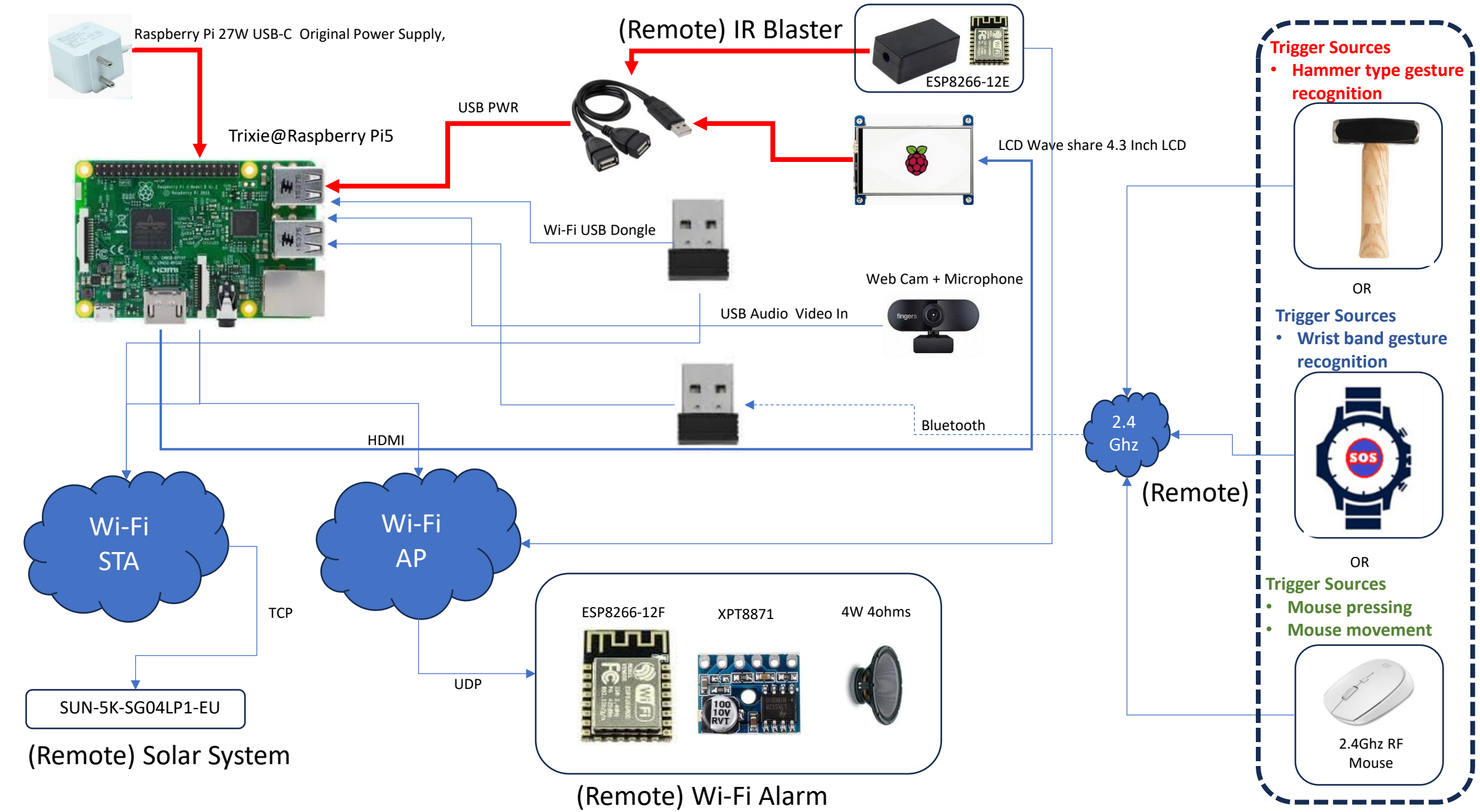
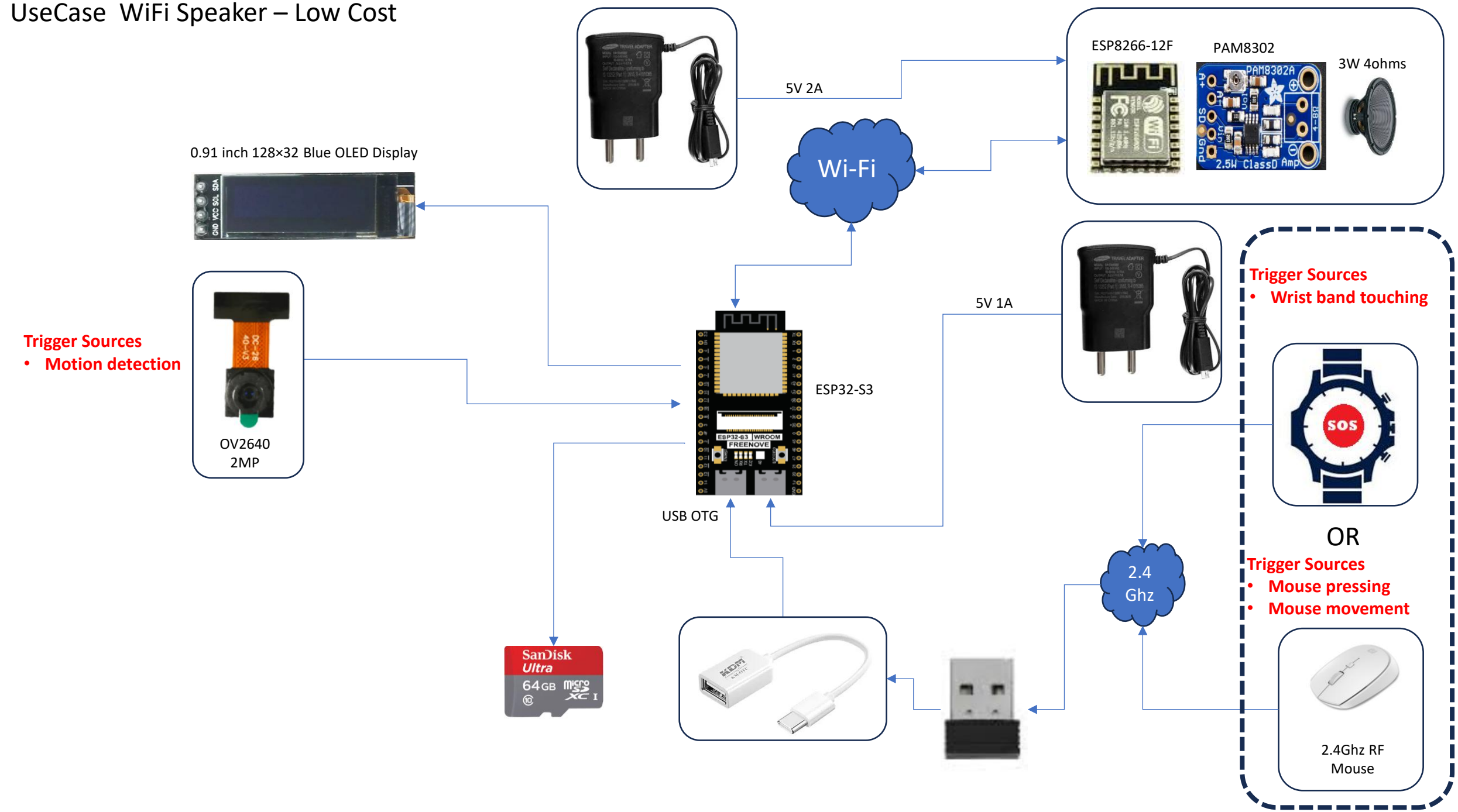
UseCase WiFi Speaker – Low Cost