Use Case Wi-Fi Alarm Speaker + [Touch or Gesture or Mouse] Alarm Source + Solar-Grid-Water Level Monitoring

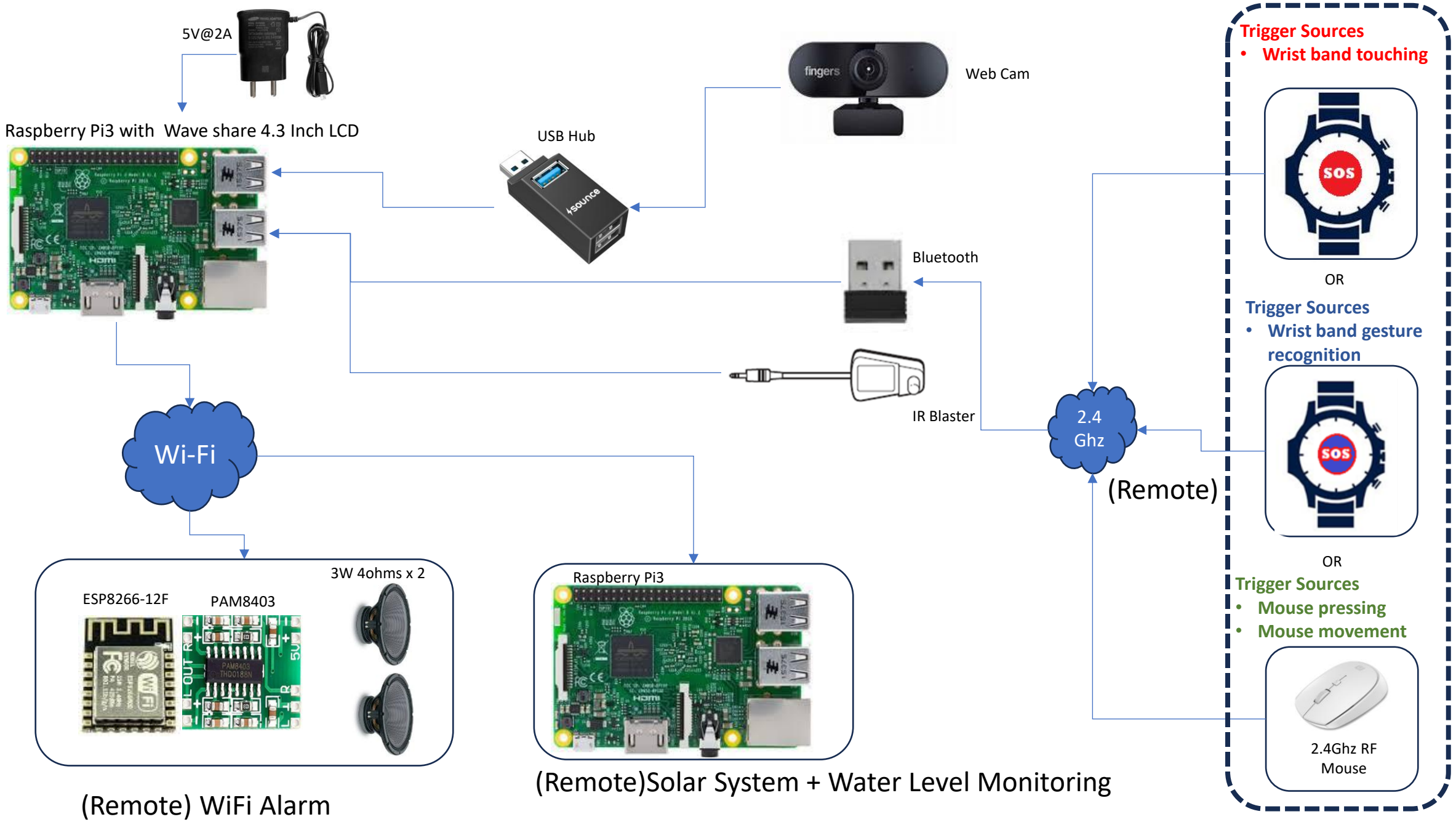

Voice
Activation

Wrist Band
Activation

Motion Detection
Activation

ALARM

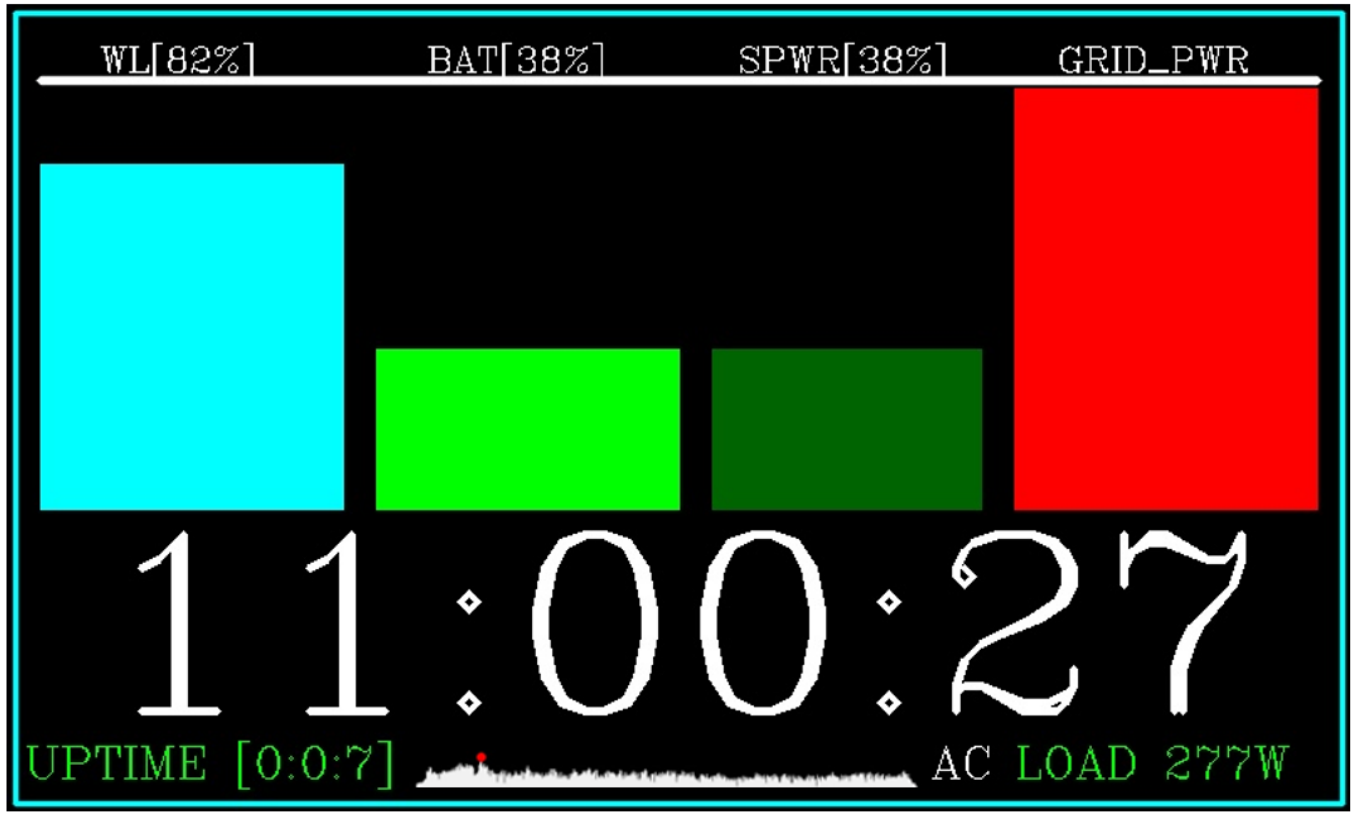
WL[82%]
BAT[38%]
SPWR[38%]
GRID_PWR
11:00:27
UPTIME [0:0:7]
AC LOAD 277W

Back to main page

System Configurations

ID	NAME
0	2.4G Mouse
1	2.4G Mouse
2	HD Web Camera: FINGERS 1080 Hi-
3	ADS7846 Touchscreen

Application Parameters

MOUSE_LEVEL[0-5]	0
MOUSE_NAME	2.4G Mouse
MOUSE_INDEX	1
BEACON_TIMEOUT[1-255]	15
DIR_MAX[1-255]	2
VOICE_THRESHOLD[>90]	13200
VOICE DETECTION HOURS[0,1,2...23]	DEFAULT
NIGHT MODE HOURS[0,1,2...23]	DEFAULT
MOTION DETECTION HOURS[0,1,2...23]	DEFAULT
AC ON HOURS[0,1,2...23]	11,13,15,20,22,0
CAMERA NAME(no)	HD Web Camera: FINGERS 1080 Hi-
SECURITY_KEY	
ALARM IP	
SOLAR IP	
ACCESS_PASSWORD	
PHOTO_MODE[yes/no]	no

Submit

MASKS

ID	5	X	0	Y	0	W	160	H	540
ID	6	X	0	Y	540	W	1280	H	180

Mask Add

X
Y
W
H
Add

Mask Remove

ID
Remove

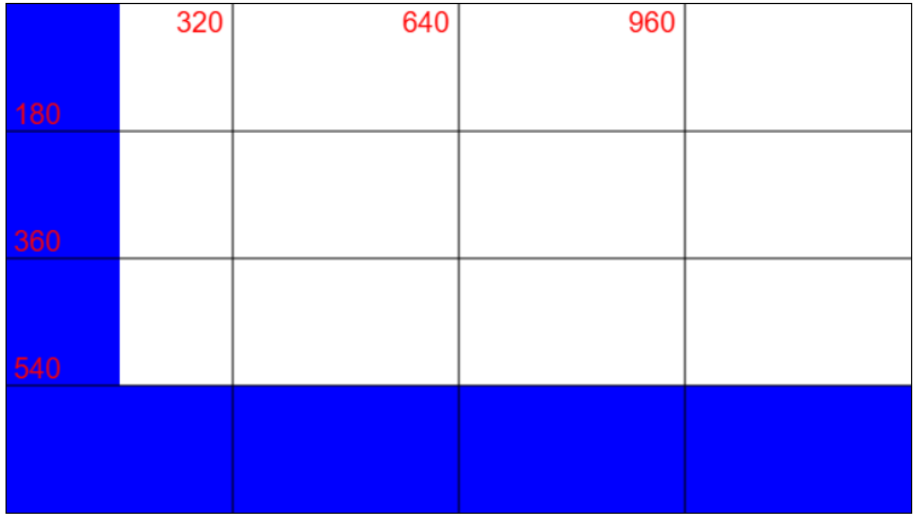

REBOOT

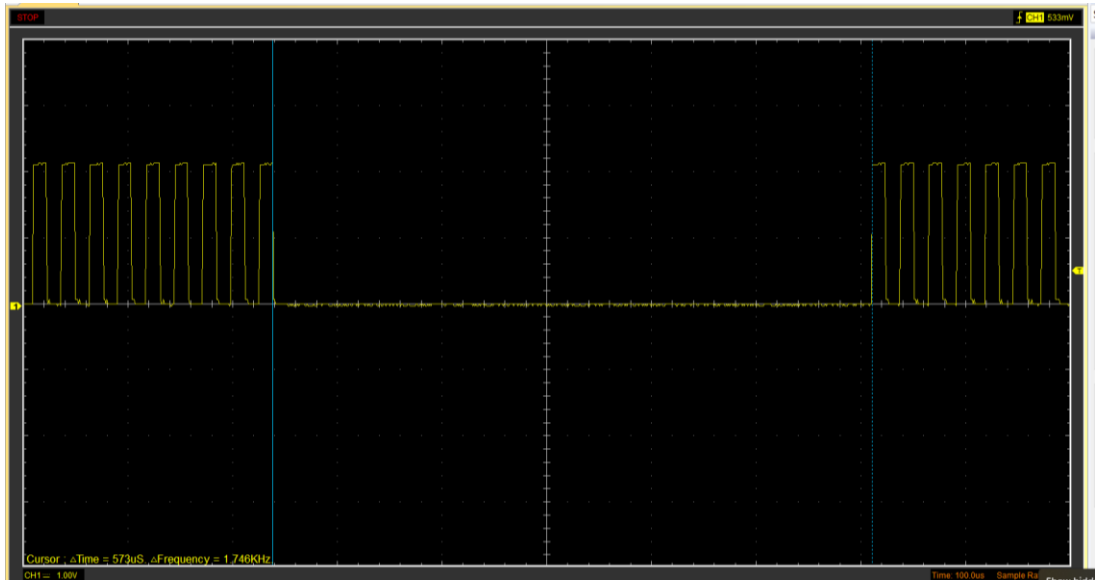

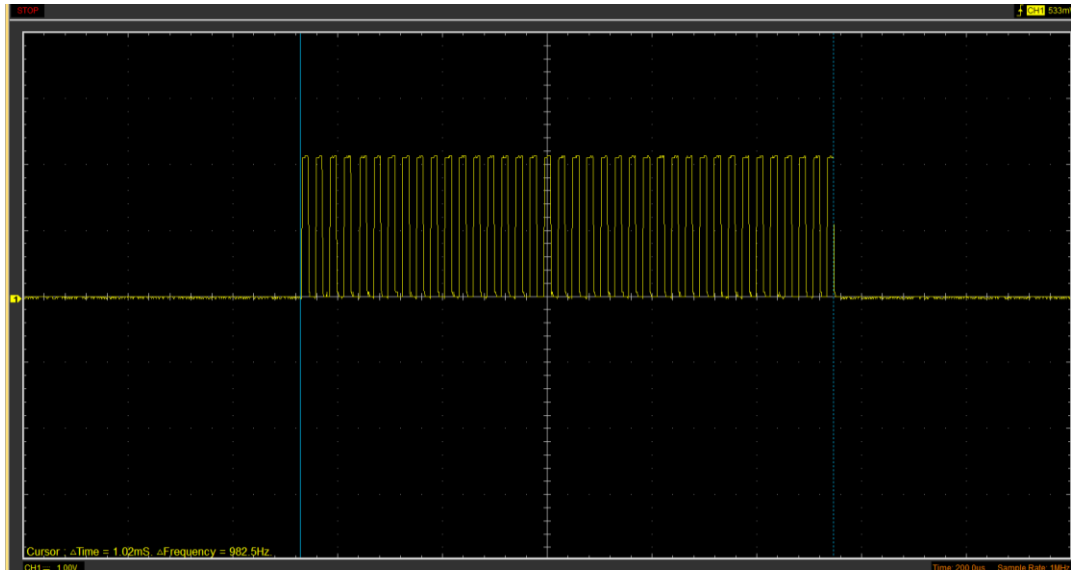

VOLTAS AC

IR Blaster

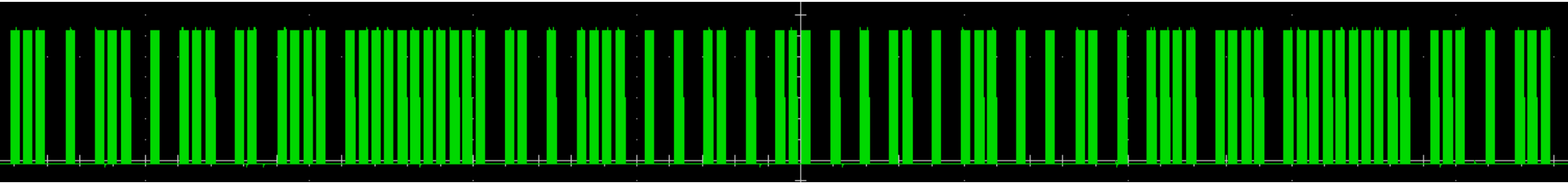

1010100000100000101010000010000010101000001010000010101010000010101010101010101010100000101000001000
0010101010000010000010000010100000100000101010000010000010000010100000100000101010000010000010000010
1000001000001010101000001010101000001010101010101010101000001010100000100000101010100000

2A082A082A0A0AA0AAAAA82820AA0820A082A0820A082A0820A082A82A82AAAA82A082A0

ON

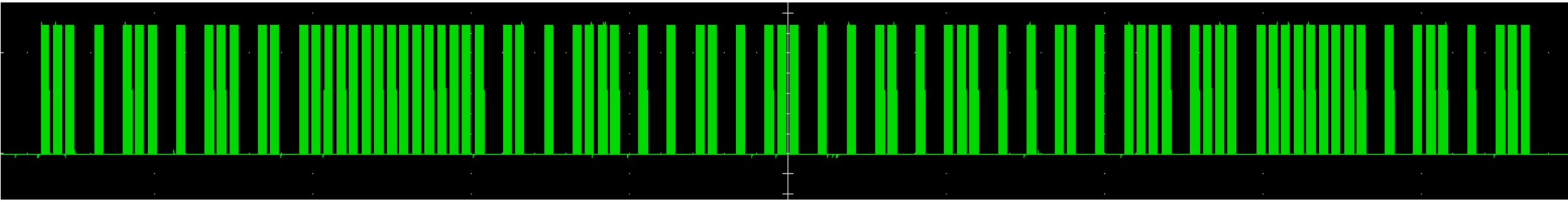

1010100000100000101010000010000010101000001010000010101010101010101010101010101010000010100000010000010
1010100000100000100000101000001000001010100000100000100000101000001000001010100000100000100000101000
0010000010101010000010101010000010101010101010101000001000001010100000100000101010

OFF

A820A820A8282AAAAAAA0A082A82082820A82082820A82082841541541555504150415

IR Blaster

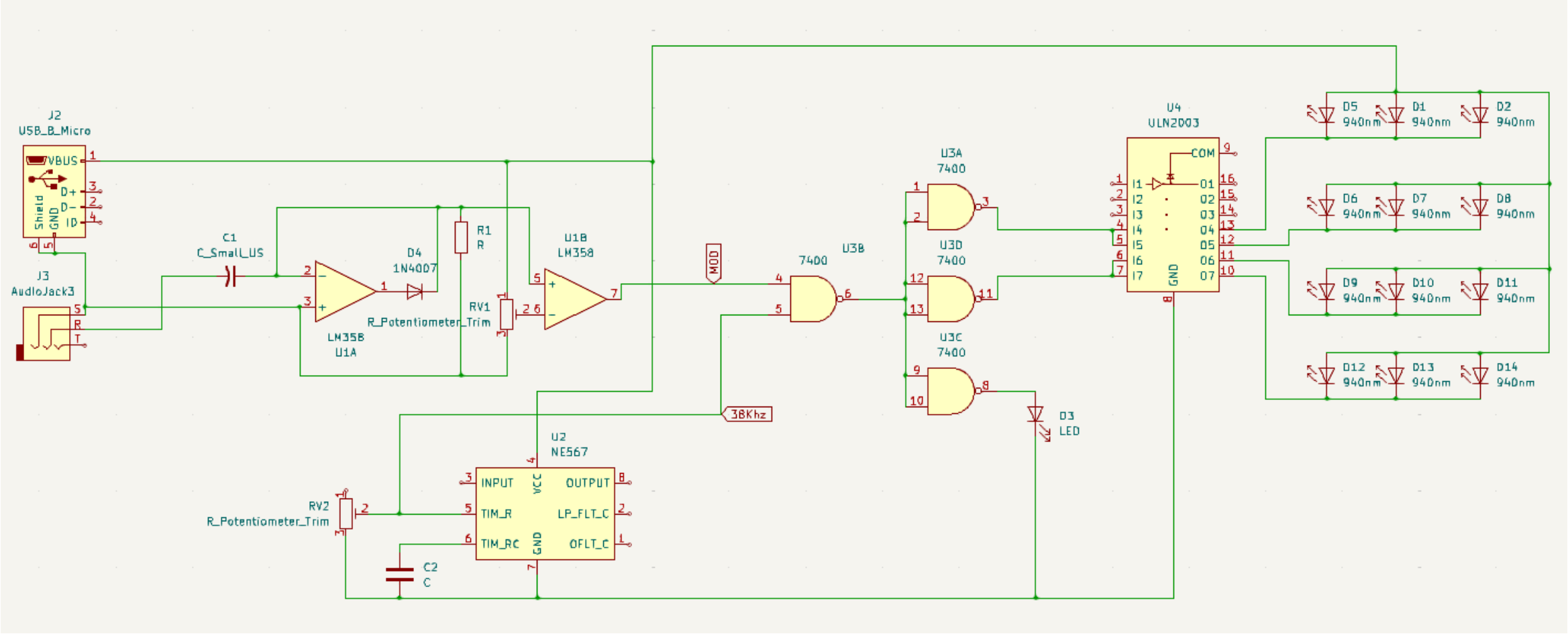
J2
USB_B_Micro
VBUS
D+
D-
ID
GND
Shield
J3
AudioJack3
R
T
C1
C_Small_US
D4
1N4007
R1
R
RV1
R_Potentiometer_Trim
LM358
U1A
U1B
LM358
MOD
7400
U3B
U3A
7400
U3D
7400
U3C
7400
D3
LED
U4
ULN2003
COM
GND
D5
940nm
D1
940nm
D2
940nm
D6
940nm
D7
940nm
D8
940nm
D9
940nm
D10
940nm
D11
940nm
D12
940nm
D13
940nm
D14
940nm
38Khz
U2
NE567
INPUT
VCC
OUTPUT
TIM_R
LP_FLT_C
TIM_RC
GND
OFLT_C
RV2
R_Potentiometer_Trim
C2
C

/boot/firmware/cmdline.txt

```
logo.nologo
```

/boot/firmware/config.txt

```
avoid_warnings=1
disable_splash=1
hdmi_group=2
hdmi_mode=87
hdmi_cvt 480 800 60 6 0 0 0
dtoverlay=ads7846,cs=1,penirq=25,penirq_pull=2,speed=50000,keep_vref_on=0,swapxy=0,pmax=255,xohms=150,xmin=200,xmax=3900,ymin=200,ymax=3900
display_rotate=3

# Enable DRM VC4 V3D driver
#dtoverlay=vc4-kms-v3d
#max_framebuffers=2
```

- sudo nmcli con add con-name ethernet ifname eth0 type ethernet ip4 10.10.10.1/24 gw4 10.10.10.1
- sudo nmcli con mod ethernet ipv4.dns 10.10.10.1,8.8.8.8
- sudo nmcli con mod ethernet connection.autoconnect true
- sudo nmcli con up ethernet ifname eth0

- sudo nmcli connection add type 802-11-wireless con-name **ssid_name** ssid **ssid_name** 802-11-wireless-security.key-mgmt WPA-PSK 802-11-wireless-security.psk **password**
- sudo nmcli con mod **ssid_name** connection.autoconnect true
- sudo nmcli connection up **ssid_name**

/var/www/html

- sudo chown www-data:www-data -R *
- sudo setfacl -m u:ecsys:rwx storage

raspi-config set timezone , enable autologin
sudo apt-get install mariadb-server php cmake libmysqlcppconn-dev syslog-ng acl vim universal-ctags apache2 libboost-all-dev libopencv-dev evtest git pulseaudio libfftw3-dev libasound2-dev libpulse-dev
sudo apt install php8.4-mysql php8.4-gd
git clone https://github.com/thestk/rtaudio
git clone https://github.com/mborgerding/kissfft

sudo mysql -u rootcreate database ecsys;use ecsys;create table out_img(data BLOB,ts TIMESTAMP NOT NULL DEFAULT CURRENT_TIMESTAMP ON UPDATE CURRENT_TIMESTAMP);
create table in_img(data BLOB,ts TIMESTAMP NOT NULL DEFAULT CURRENT_TIMESTAMP ON UPDATE CURRENT_TIMESTAMP);
insert into out_img(data) values(LOAD_FILE('/home/seccam/backup/dbase/tv640.jpg'));insert into in_img(data) values(LOAD_FILE('/home/seccam/backup/dbase/tv640.jpg’));

create table syscon(id MEDIUMINT,name CHAR(255) NOT NULL);
create table mask(id int NOT NULL AUTO_INCREMENT,x CHAR(255) NOT NULL,CHAR(255) NOT NULL,w CHAR(255) NOT NULL,h CHAR(255) NOT NULL,PRIMARY KEY (id));

create table cfg(mouse_level MEDIUMINT NULL,mouse_name CHAR(255) NOT NULL,mouse_index MEDIUMINT NULL,beacon_timeout MEDIUMINT NULL,dir_max MEDIUMINT NULL,voice_th MEDIUMINT NULL,voice CHAR(64) NULL,ac CHAR(64) NULL,cam CHAR(64) NULL,skey CHAR(64) NULL,access CHAR(64) NULL,aip CHAR(32) NULL,sip CHAR(32) NULL,night CHAR(64) NULL,photo CHAR(16) NOT NULL,motion CHAR(64),reboot TINYINT NULL);

insert into cfg(mouse_level,mouse_name,mouse_index,beacon_timeout,dir_max,voice_th,voice,ac,cam,skey,access,aip,sip,night,photo,motion,reboot) values(0,'DEAFULT',1,15,7,140,'DEFAULT','DEFAULT','DEFAULT','ecsys_key','admin','192.168.0.100','192.168.0.105','DEFAULT','no','DEFAULT',0);

create user 'userecsys'@'localhost' identified by 'ecsys123’;
grant all on ecsys.* TO 'userecsys'@'localhost’;

```
+----------------+--------------+------+-----+---------+-------+
| Field          | Type         | Null | Key | Default | Extra |
+----------------+--------------+------+-----+---------+-------+
| mouse_level    | mediumint(9) | YES  |     | NULL    |       |
| mouse_name     | char(255)    | NO   |     | NULL    |       |
| mouse_index    | mediumint(9) | YES  |     | NULL    |       |
| beacon_timeout | mediumint(9) | YES  |     | NULL    |       |
| dir_max        | mediumint(9) | YES  |     | NULL    |       |
| voice_th       | mediumint(9) | YES  |     | NULL    |       |
| voice          | char(64)     | YES  |     | NULL    |       |
| ac             | char(64)     | YES  |     | NULL    |       |
| cam            | char(64)     | YES  |     | NULL    |       |
| skey           | char(64)     | YES  |     | NULL    |       |
| access         | char(64)     | YES  |     | NULL    |       |
| aip            | char(32)     | YES  |     | NULL    |       |
| sip            | char(32)     | YES  |     | NULL    |       |
| night          | char(64)     | YES  |     | NULL    |       |
| photo          | char(16)     | NO   |     | NULL    |       |
| motion         | char(64)     | YES  |     | NULL    |       |
| reboot         | tinyint(4)   | YES  |     | NULL    |       |
+----------------+--------------+------+-----+---------+-------+
17 rows in set (0.005 sec)
```

```
+-------+--------------+------+-----+---------+-------+
| Field | Type         | Null | Key | Default | Extra |
+-------+--------------+------+-----+---------+-------+
| id    | mediumint(9) | YES  |     | NULL    |       |
| name  | char(255)    | NO   |     | NULL    |       |
+-------+--------------+------+-----+---------+-------+
```

```
MariaDB [ecsys]> show tables;
+-----------------+
| Tables_in_ecsys |
+-----------------+
| cfg             |
| in_img          |
| mask            |
| out_img         |
| syscon          |
+-----------------+
```

```
MariaDB [ecsys]> desc mask;
+-------+-----------+------+-----+---------+----------------+
| Field | Type      | Null | Key | Default | Extra          |
+-------+-----------+------+-----+---------+----------------+
| id    | int(11)   | NO   | PRI | NULL    | auto_increment |
| x     | char(255) | NO   |     | NULL    |                |
| y     | char(255) | NO   |     | NULL    |                |
| w     | char(255) | NO   |     | NULL    |                |
| h     | char(255) | NO   |     | NULL    |                |
+-------+-----------+------+-----+---------+----------------+
5 rows in set (0.004 sec)
```

```
MariaDB [ecsys]> desc out_img;
+-------+-----------+------+-----+---------------------+-------------------------------+
| Field | Type      | Null | Key | Default             | Extra                         |
+-------+-----------+------+-----+---------------------+-------------------------------+
| data  | blob      | YES  |     | NULL                |                               |
| ts    | timestamp | NO   |     | current_timestamp() | on update current_timestamp() |
+-------+-----------+------+-----+---------------------+-------------------------------+
```

```
MariaDB [ecsys]> desc in_img;
+-------+-----------+------+-----+---------------------+-------------------------------+
| Field | Type      | Null | Key | Default             | Extra                         |
+-------+-----------+------+-----+---------------------+-------------------------------+
| data  | blob      | YES  |     | NULL                |                               |
| ts    | timestamp | NO   |     | current_timestamp() | on update current_timestamp() |
+-------+-----------+------+-----+---------------------+-------------------------------+
```

```
+-------+-----------+------+-----+---------+----------------+
| Field | Type      | Null | Key | Default | Extra          |
+-------+-----------+------+-----+---------+----------------+
| id    | int(11)   | NO   | PRI | NULL    | auto_increment |
| x     | char(255) | NO   |     | NULL    |                |
| y     | char(255) | NO   |     | NULL    |                |
| w     | char(255) | NO   |     | NULL    |                |
| h     | char(255) | NO   |     | NULL    |                |
+-------+-----------+------+-----+---------+----------------+
```

```
MariaDB [ecsys]> desc syscon;
+-------+--------------+------+-----+---------+-------+
| Field | Type         | Null | Key | Default | Extra |
+-------+--------------+------+-----+---------+-------+
| id    | mediumint(9) | YES  |     | NULL    |       |
| name  | char(255)    | NO   |     | NULL    |       |
+-------+--------------+------+-----+---------+-------+
```

.bashrc

```
cmd=$(pgrep keep_alive.sh)
if [ -z "$cmd" ]; then
	if [ -f /home/ecsys/enable ]; then
		/home/ecsys/app/keep_alive.sh &
	fi
fi
```

- sudo nmcli dev wifi rescan
- nmcli dev wifi list
- sudo nmcli device wifi rescan && nmcli device wifi list
- sudo nmcli device wifi connect sarath_nivas password land1234
- sudo nmcli con mod sarath_nivas connection.autoconnect true

- sudo systemctl --no-pager status syslog-ng
- sudo systemctl restart syslog-ng
- sudo systemctl enable syslog-ng

- nmcli connection add type 802-11-wireless con-name sarath_nivas_EXT ssid sarath_nivas_EXT 802-11-wireless-security.key-mgmt WPA-PSK 802-11-wireless-security.psk land1234
- nmcli con mod sarath_nivas_EXT connection.autoconnect true
- nmcli connection up sarath_nivas_EXT

- sudo nmcli con add con-name ethernet ifname eth0 type ethernet ip4 10.10.10.1/24 gw4 10.10.10.1sudo nmcli con mod ethernet ipv4.dns 10.10.10.1,8.8.8.8sudo nmcli con up ethernet ifname eth0nmcli connection

config.txt

console=serial0,115200 console=tty1 root=PARTUUID=c16020ce-02 rootfstype=ext4 fsck.repair=yes rootwait cfg80211.ieee80211_regdom=IN logo.nologo

cmdline.txt

```
avoid_warnings=1
disable_splash=1
hdmi_group=2
hdmi_mode=87
hdmi_cvt 480 800 60 6 0 0 0
dtoverlay=ads7846,cs=1,penirq=25,penirq_pull=2,speed=50000,keep_vref_on=0,swapxy=0,pmax=255,xohms=150,xmin=200,xmax=3900,ymin=200,ymax=3900display_rotate=3

# Enable DRM VC4 V3D driver
#dtoverlay=vc4-kms-v3d
#max_framebuffers=2
# Don't have the firmware create an initial video= setting in cmdline.txt.
# Use the kernel's default instead.
#disable_fw_kms_setup=1
# Disable compensation for displays with overscan
disable_overscan=1
```