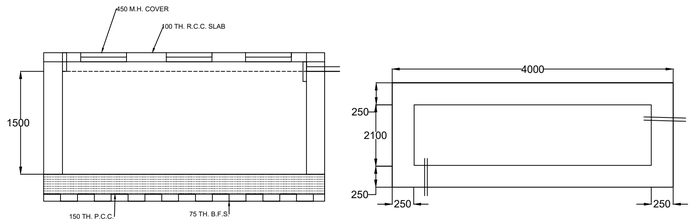

PLAN & SEC. DET.OF WATER RESERVER TANK AT TOP ROOF

SCALE= 1:50

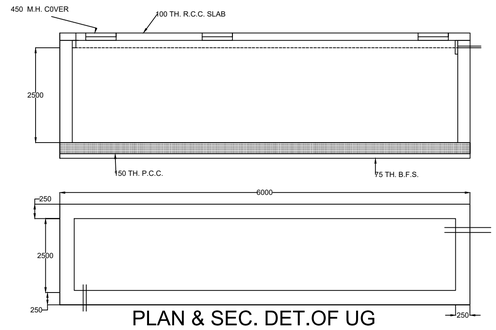

PLAN & SEC. DET.OF UG WATER RESERVER TANK

SCALE= 1:50

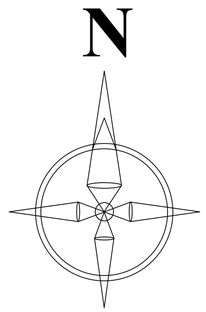

PROPOSED PLAN OF KOLKATA PUBLIC ACADEMY (KPA) AT MOUZA - KHASTIKA, J.L. NO. - 48, DAG NO.- 157,175, KH. NO. - 815,1614, UNDER P.S.- BISHNUPUR, DIST. - 24 PGS. (S) ,BLOCK - BISHNUPUR II, PIN-743503,PATHAR BERIA JAYCHANDIPUR GRAM PANCHAYAT.

#LAND AREA = 94.13 DEC
GROUND FLOOR AREA= 136.6 SQ.M.=1470 SQ.FT.
FIRST FLOOR AREA = 136.6 SQ.M.=1470 SQ.FT.
ROOF AREA = 136.6 SQ.M.=1470 SQ.FT.

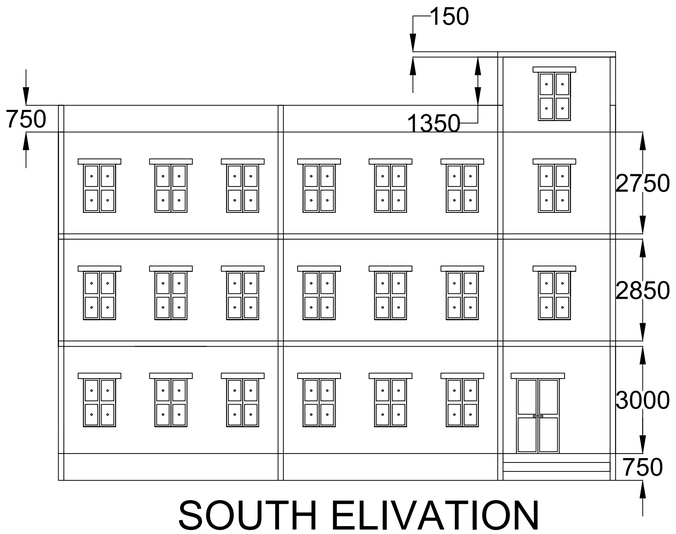

SOUTH ELIVATION

SCALE= 1:100

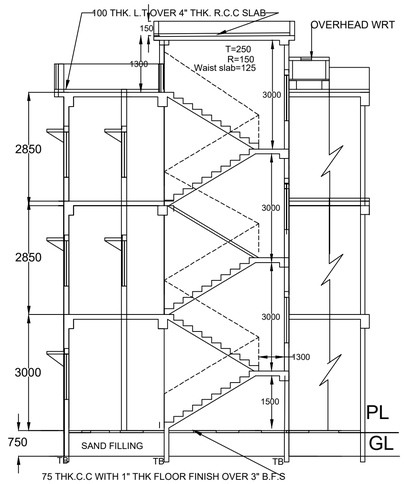

SECTION AA

SCALE= 1:100

DOORS & WINDOWS	
MARKED	SIZE
D1	1000 X 2100
D2	900 X 2100
D3	750 X 2100
W1	1500 X 1200
W2	1000 X 1200
W3	600 X 600

NOTES & SPECIFICATION:-

1. ALL DIMENSIONS ARE IN MM. UNLESS OTHERWISE IS STATED.
2. CONCRETE GRADE M-20
3. REINFORCEMENT STEEL CONFORM TO Fe 500
4. LAP LENGTH & COVER TO THE REINFORCEMENT SHOULD CONFORM TO IS-456-1978.
5. 250 THK WALL, CEMENT MORTAR-1:6
6. 125 THK WALL, CEMENT MORTAR 1:4
7. THE DEPTH OF SEPTIC TANK SHOULD NOT EXCEED THE DEPTH OF NEAREST BUILDING FOUNDATION.
8. USED SCALE 1:100, 1:50, 1:25, 1:20, 1:600.
9. SITE PLAN SUPPLIED BY OWNER

I WILL TAKE FULL RESPONSIBILITY REGARDING MY LAND AND BUILDING POSSESSION

KOLKATA PUBLIC ACADEMY (KPA)

SIGN:-

OWNERS NAME

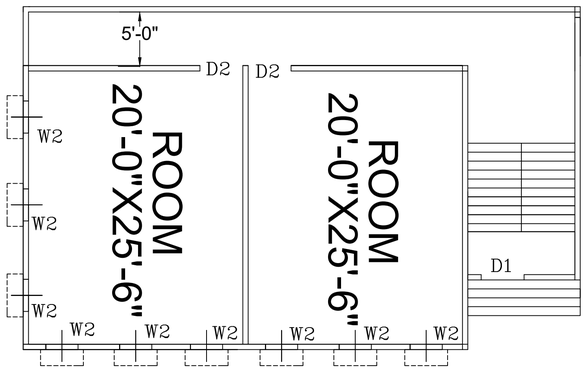

GROUND FLOOR

SCALE= 1:100

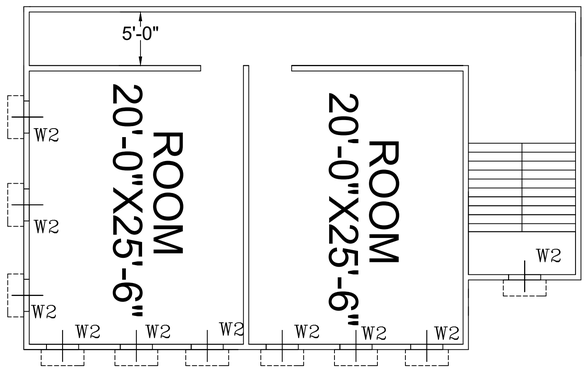

FIRST & SECOND FLOOR PLAN

SCALE= 1:100

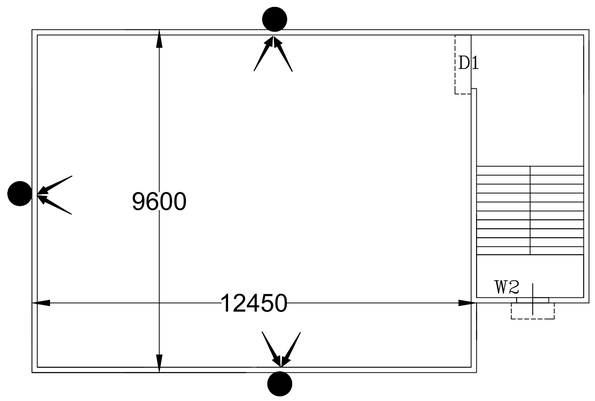

ROOF PLAN

SCALE= 1:100

SIGNATURE OF OFFICE USE

CERTIFY WITH FULL RESPONSIBILITY THAT THE BUILDING PLAN HAS BEEN DRAWN UP AS PER PROVISION OF SOUTH 24 PGS ZILLA PARISHAD RULES 2009. AS AMMENDED FROM TIME TO TIME AND THAT THE SITE CONDITION INCLUDING WIDTH OF ABUTTING COM. PASS. CONFORM WITH THE PLAN, WHICH HAS BEEN MEASURED AND VERIFIED BY ME. IT IS A BUILDABLE SITE NOT AT TANK OR FILLED UP A TANK. THE LAND IS DEMARCATED BY BOUNDED BY BOUNDARY WALL. THE CONSTRUCTION OF SEMI U./G. WATER TANK AND SEPTIC TANK WILL BE COMPLETED BEFORE STARTING OF BUILDING FOUNDATION WORK.

ARUN KR. PAUL
SIGNATURE OF ENGINEER