LPDDR3_32X1

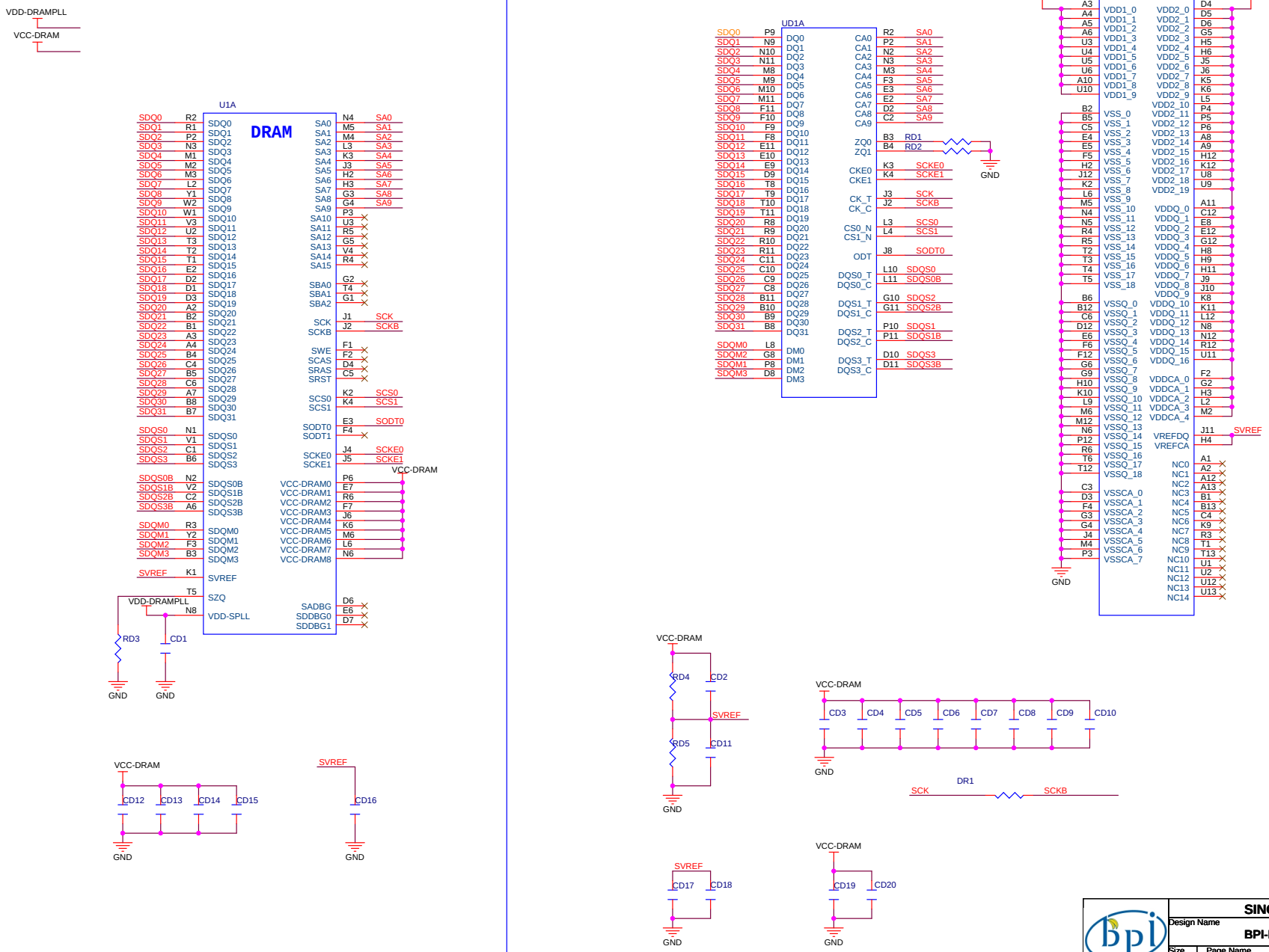

SINOVOIP CO.,LIMITED		
Design Name: BPI-M3		
Size: A3	Page Name: LPDDR3_32x1	Rev: V1.1
http://www.banana-pi.org	Date: Friday, October 16, 2015	Sheet 5 of 16

CPU

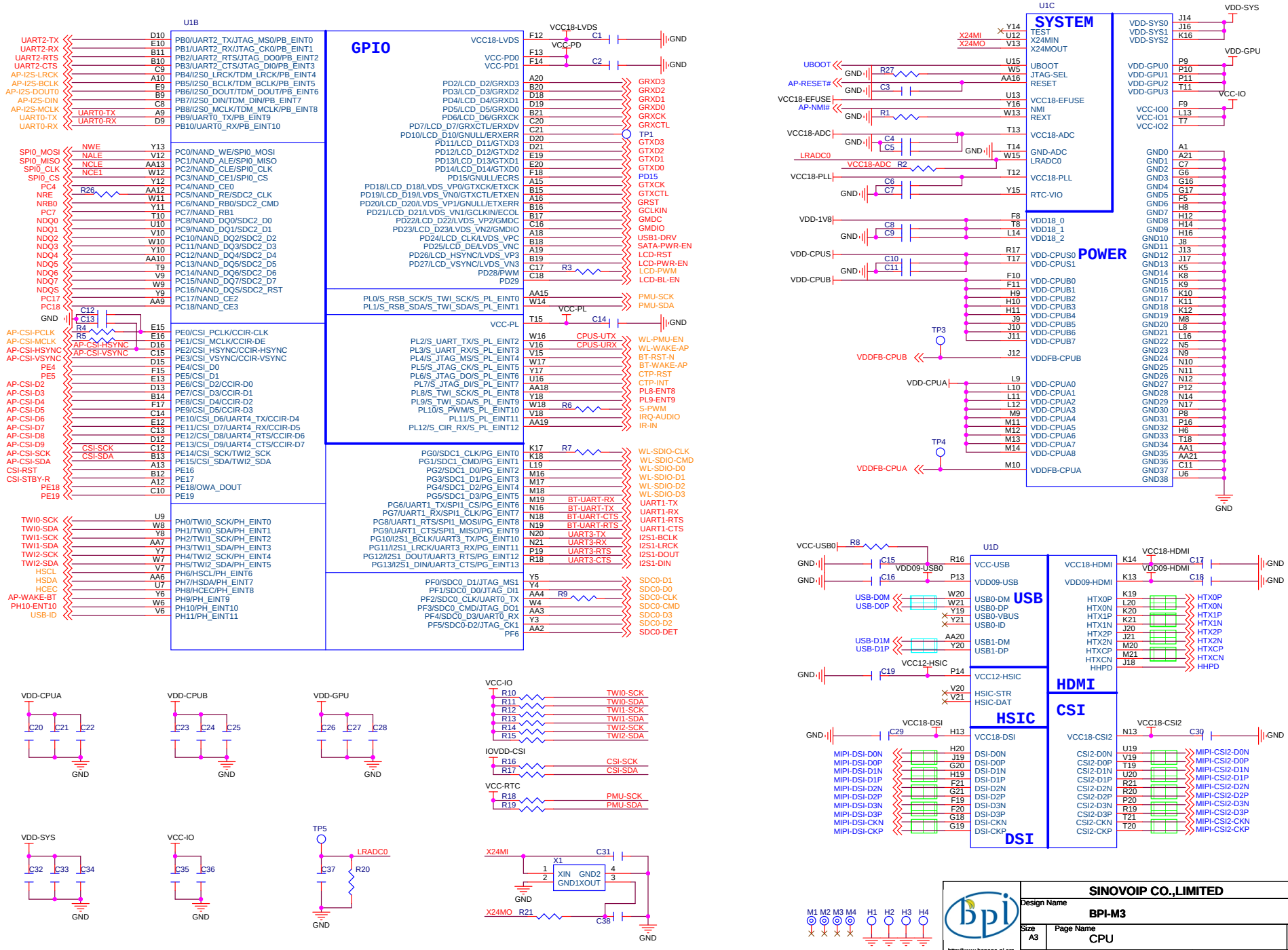

SINOVOIP CO.,LIMITED	
Design Name	BPI-M3
Size A3	Page Name CPU
Rev	V1.1
Date:	Friday, October 16, 2015
Sheet	6 of 16

http://www.banana-pi.org

PMIC

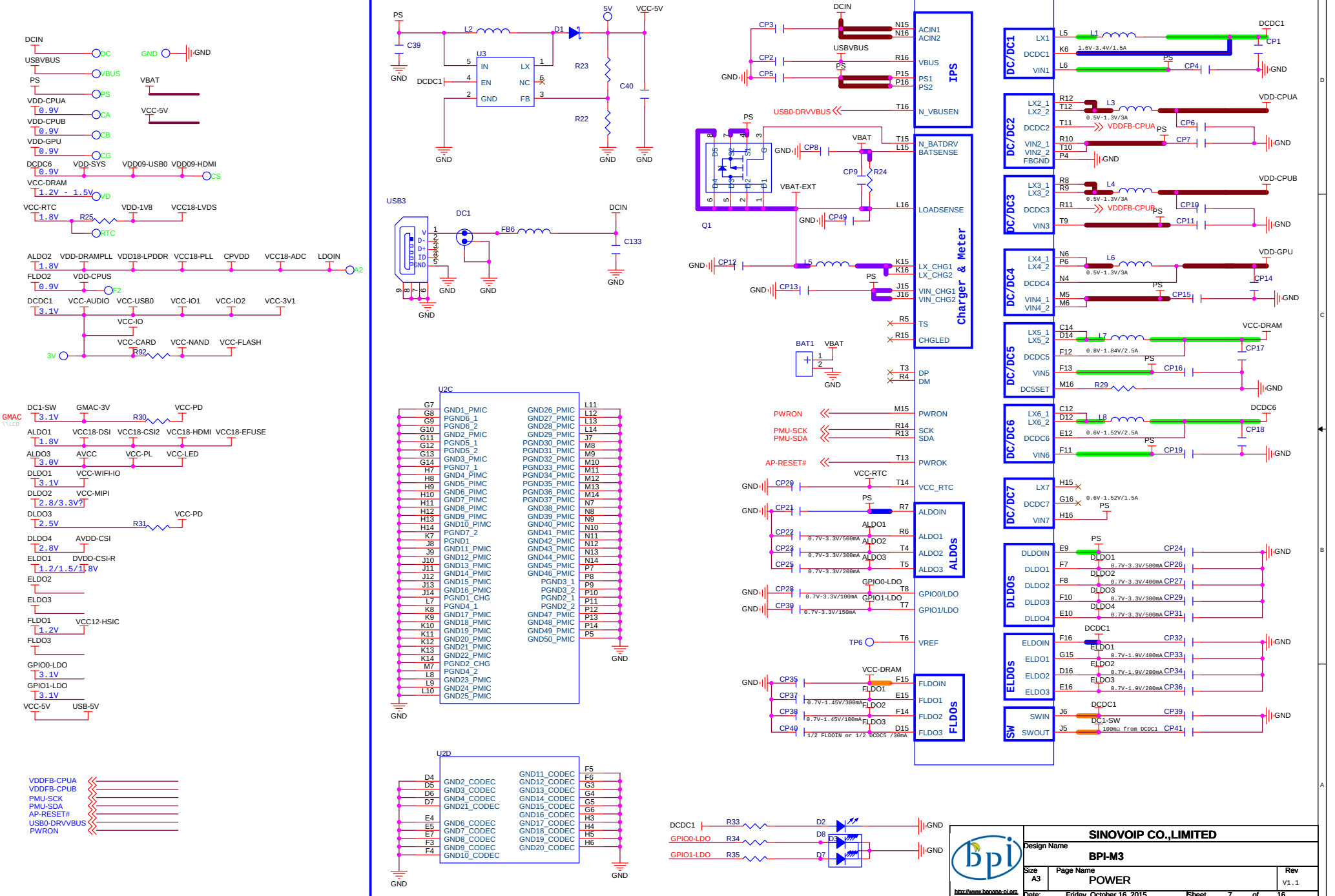
DCIN
USBVBUS
PS
VDD-CPUA
0.9V
VDD-CPUB
0.9V
VDD-GPU
0.9V
DCDC6
0.9V
VCC-DRAM
1.2V - 1.5V
VCC-RTC
1.8V
RTC
VDD-SYS
VDD09-USB0
VDD09-HDMI
VBAT
VCC-5V
VDD-1V8
VCC18-LVDS
R25
ALDO2
1.8V
VDD-DRAMPLL
VDD18-LPDDR
VCC18-PLL
CPVDD
VCC18-ADC
LDOIN
FLDO2
0.9V
VDD-CPUS
DCDC1
3.1V
VCC-AUDIO
VCC-USB0
VCC-IO1
VCC-IO2
VCC-3V1
VCC-IO
VCC-CARD
VCC-NAND
VCC-FLASH
R92
3V
GMAC
DC1-SW
3.1V
GMAC-3V
R30
VCC-PD
ALDO1
1.8V
VCC18-DSI
VCC18-CSI2
VCC18-HDMI
VCC18-EFUSE
ALDO3
3.0V
AVCC
VCC-PL
VCC-LED
DLDO1
3.1V
VCC-WIFI-IO
DLDO2
2.8/3.3V?
VCC-MIPI
DLDO3
2.5V
R31
DLDO4
2.8V
AVDD-CSI
ELDO1
1.2/1.5/1.8V
DVDD-CSI-R
ELDO2
ELDO3
FLDO1
1.2V
VCC12-HSIC
FLDO3
GPIO0-LDO
3.1V
GPIO1-LDO
3.1V
VCC-5V
USB-5V
VDDFB-CPUA
VDDFB-CPUB
PMU-SCK
PMU-SDA
AP-RESET#
USB0-DRVVBUS
PWRON
PS
C39
L2
D1
U3
IN
LX
EN
NC
GND
FB
DCDC1
R23
R22
C40
5V
VCC-5V
USB3
DC1
FB6
C133
DCIN
U2C
GND1_PMIC
PGND6_1
GND6_2
GND2_PMIC
PGND5_1
PGND5_2
GND3_PMIC
PGND7_1
GND4_PIMC
GND5_PIMC
GND6_PIMC
GND7_PIMC
GND8_PIMC
GND9_PIMC
GND10_PIMC
PGND7_2
PGND1
GND11_PMIC
GND12_PMIC
GND13_PMIC
GND14_PMIC
GND15_PMIC
GND16_PMIC
GND17_PMIC
GND18_PMIC
GND19_PMIC
GND20_PMIC
GND21_PMIC
GND22_PMIC
PGND2_CHG
PGND4_2
GND23_PMIC
GND24_PMIC
GND25_PMIC
GND26_PMIC
GND27_PMIC
GND28_PMIC
GND29_PMIC
PGND30_PMIC
PGND31_PMIC
PGND32_PMIC
PGND33_PMIC
PGND34_PMIC
PGND35_PMIC
PGND36_PMIC
PGND37_PMIC
GND38_PMIC
GND39_PMIC
GND40_PMIC
GND41_PMIC
GND42_PMIC
GND43_PMIC
GND44_PMIC
GND45_PMIC
GND46_PMIC
PGND3_1
PGND3_2
PGND2_1
PGND2_2
GND47_PMIC
GND48_PMIC
GND49_PMIC
GND50_PMIC
U2D
GND2_CODEC
GND3_CODEC
GND4_CODEC
GND21_CODEC
GND6_CODEC
GND7_CODEC
GND8_CODEC
GND9_CODEC
GND10_CODEC
GND11_CODEC
GND12_CODEC
GND13_CODEC
GND14_CODEC
GND15_CODEC
GND16_CODEC
GND17_CODEC
GND18_CODEC
GND19_CODEC
GND20_CODEC
U2A
ACIN1
ACIN2
VBUS
PS1
PS2
N_VBUSEN
N_BATDRV
BATSENSE
LOADSENSE
LX_CHG1
LX_CHG2
VIN_CHG1
VIN_CHG2
TS
CHGLED
DP
DM
PWRON
SCK
SDA
PWROK
VCC_RTC
ALDOIN
ALDO1
ALDO2
ALDO3
GPIO0_LDO
GPIO1_LDO
GPIO0/LDO
GPIO1/LDO
VREF
FLDOIN
FLDO1
FLDO2
FLDO3
IPS
Charger & Meter
ALDOs
FLDOs
Q1
VBAT-EXT
USB0-DRVVBUS
BAT1
DC/DC1
DC/DC2
DC/DC3
DC/DC4
DC/DC5
DC/DC6
DC/DC7
DLDOs
ELDOs
SW
SWIN
SWOUT
DCDC1
DCDC2
DCDC3
DCDC4
DCDC5
DCDC6
DCDC7
VIN1
VIN2_1
VIN2_2
FBGND
VIN3
VIN4_1
VIN4_2
VIN5
DC5SET
VIN6
VIN7
DLDOIN
ELDOIN
1.6V-3.4V/1.5A
0.5V-1.3V/3A
VDDFB-CPUA
VDDFB-CPUB
0.8V-1.84V/2.5A
0.6V-1.52V/2.5A
0.6V-1.52V/1.5A
0.7V-3.3V/500mA
0.7V-3.3V/300mA
0.7V-3.3V/200mA
0.7V-3.3V/100mA
0.7V-3.3V/150mA
0.7V-1.9V/400mA
0.7V-1.9V/200mA
0.7V-1.45V/300mA
0.7V-1.45V/100mA
1/2 FLDOIN or 1/2 DCDC5 /30mA
100mA from DCDC1
DCDC1-SW
DCDC1
GPIO0-LDO
GPIO1-LDO
R33
R34
R35
D2
D8
D3
D7
SINOVOIP CO.,LIMITED
Design Name
BPI-M3
Size
A3
Page Name
POWER
Rev
V1.1
http://www.banana-pi.org
Date:
Friday, October 16, 2015
Sheet
7
of
16

TF-eMMC

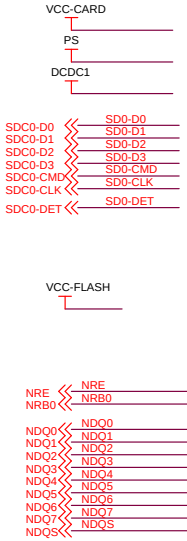

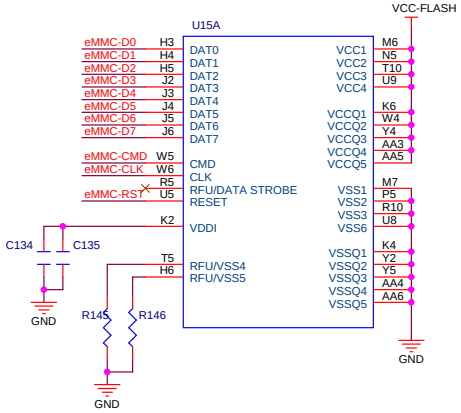

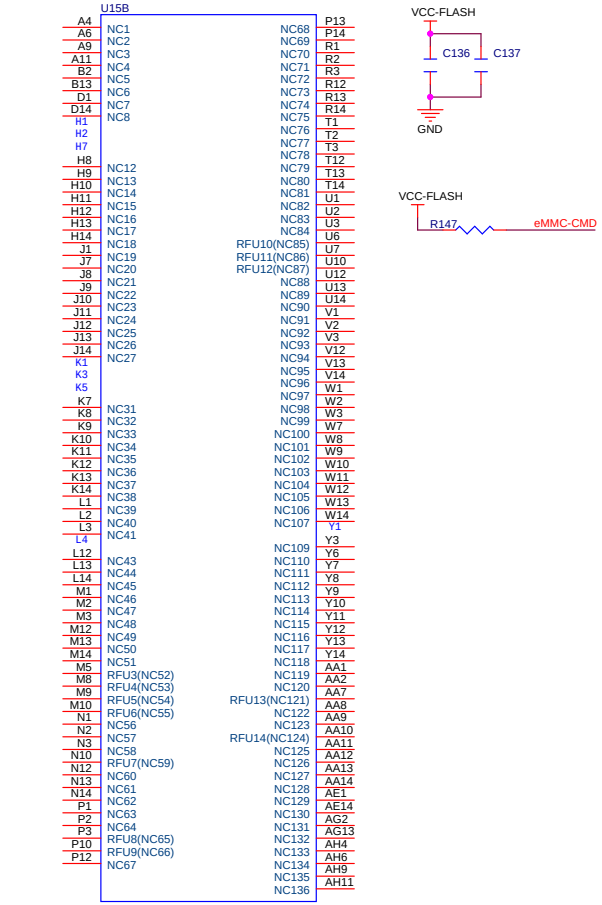

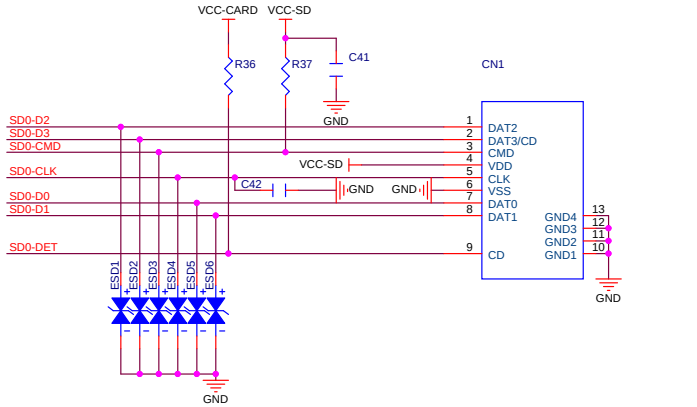

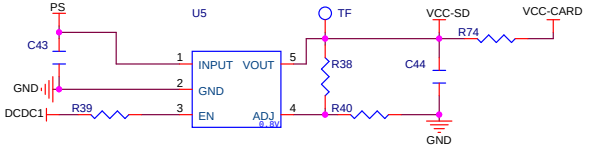

SINOVOIP CO.,LIMITED			
Design Name: BPI-M3			
Size: A3	Page Name: TF-eMMC		Rev: V1.1
http://www.banana-pi.org	Date: Friday, October 16, 2015	Sheet 8 of 16	

CODEC

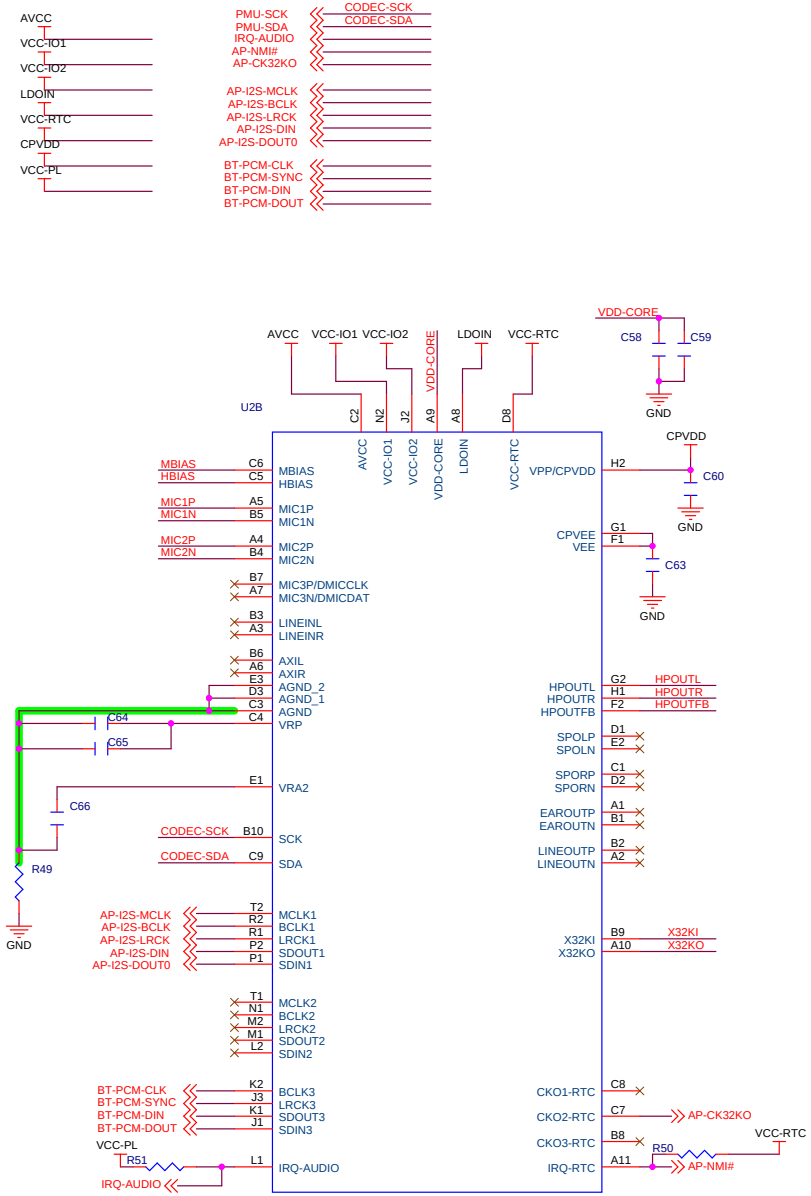

HP_JACK

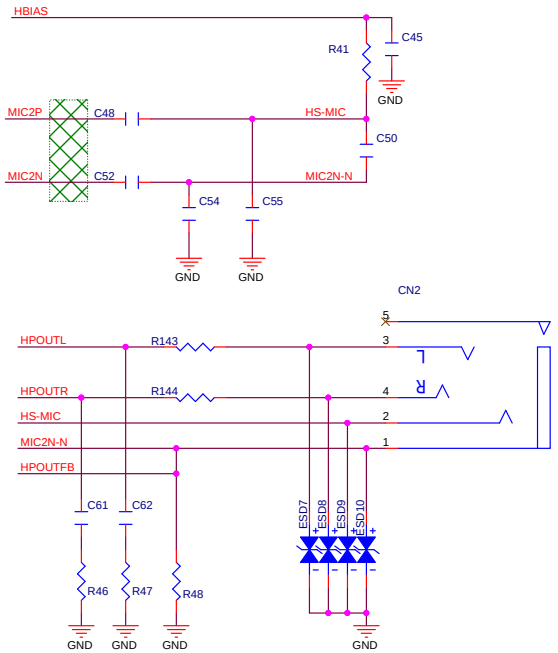

ECM AMIC

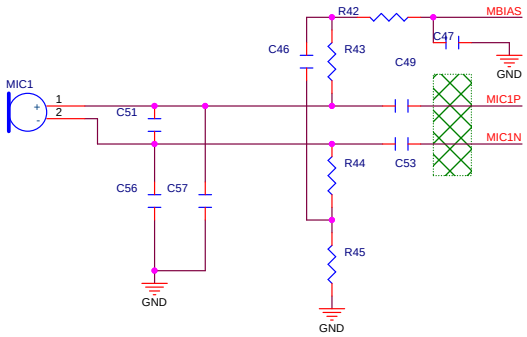

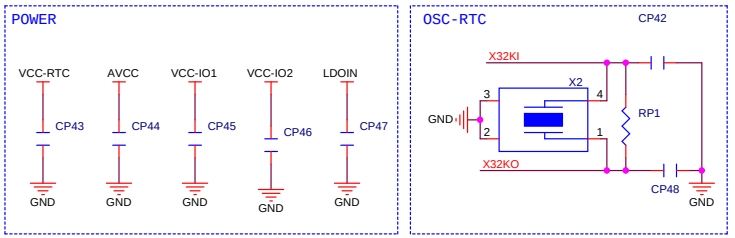

SINOVOIP CO.,LIMITED		
Design Name: BPI-M3		
Size: A3	Page Name: CODEC	Rev: V1.1
http://www.banana-pi.org	Date: Friday, October 16, 2015	Sheet 9 of 16

USB

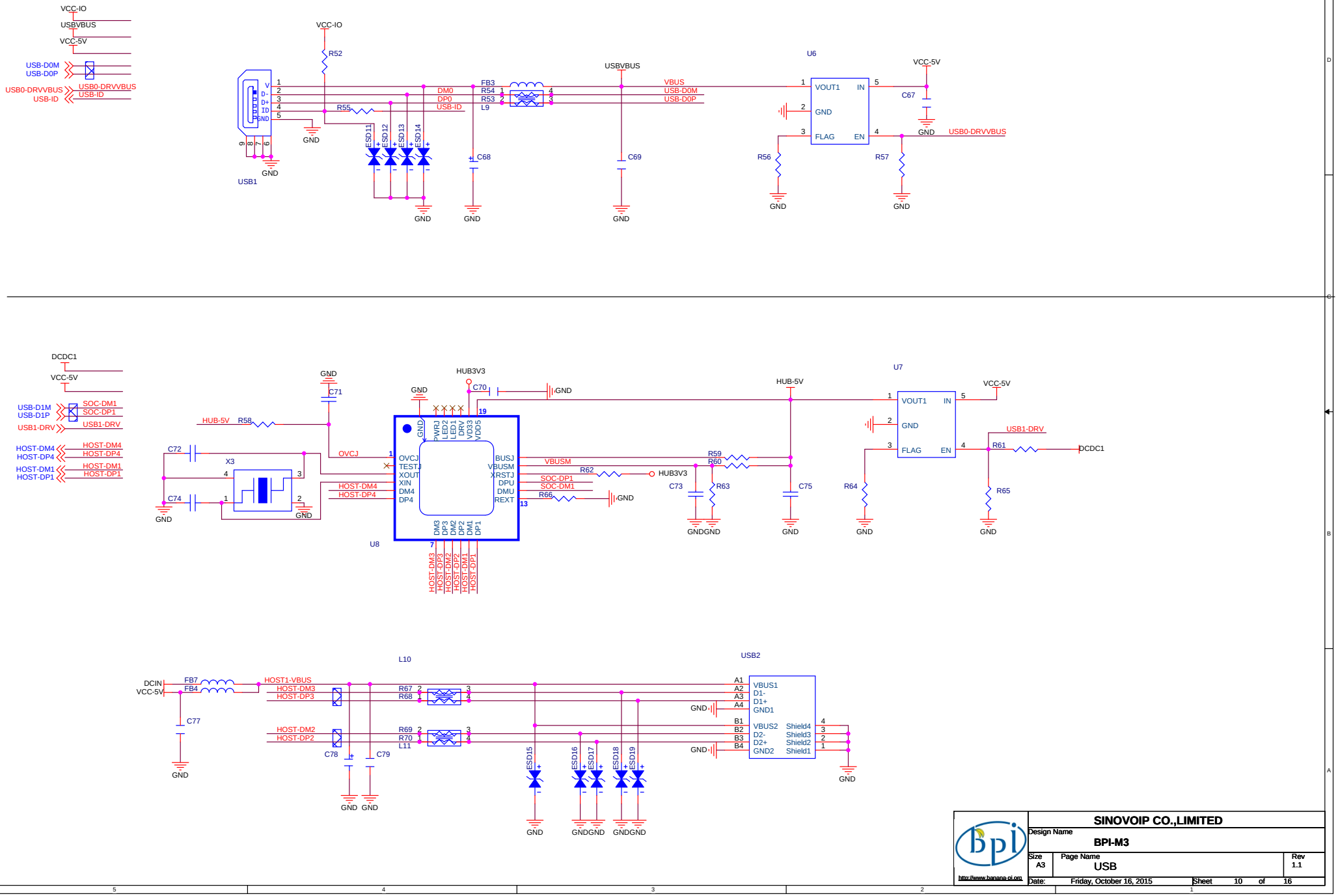

SINOVOIP CO.,LIMITED			
Design Name: BPI-M3			
Size: A3	Page Name: USB		Rev: 1.1
http://www.banana-pi.org	Date: Friday, October 16, 2015	Sheet 10 of 16	

USB-SATA

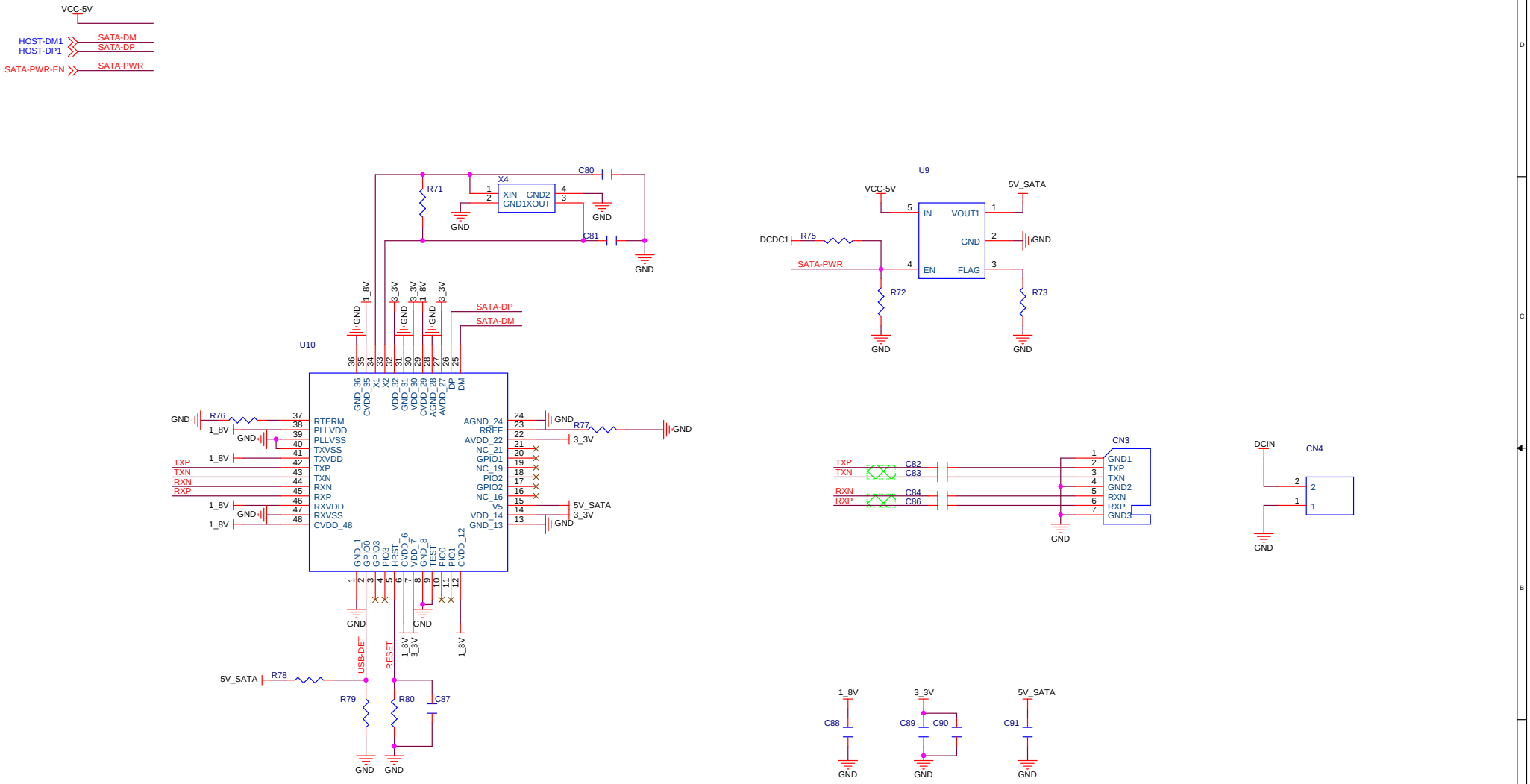

SINOVOIP CO.,LIMITED			
Design Name: BPI-M3			
Size: A3	Page Name: USB-SATA		Rev: V1.1
Date: Friday, October 16, 2015	Sheet 11 of 16		

http://www.banana-pi.org

HDMI-MIPI DSI

HDMI

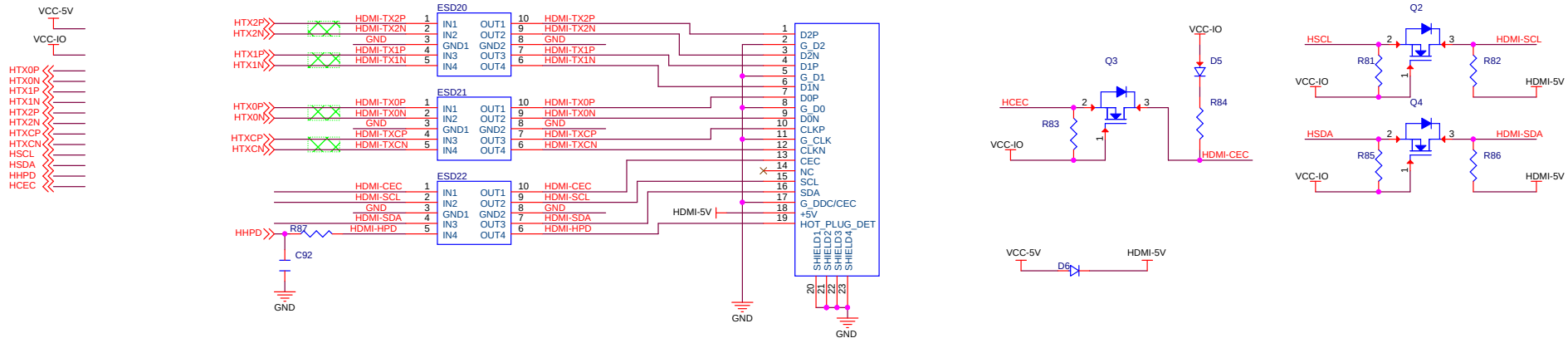

MIPI DSI

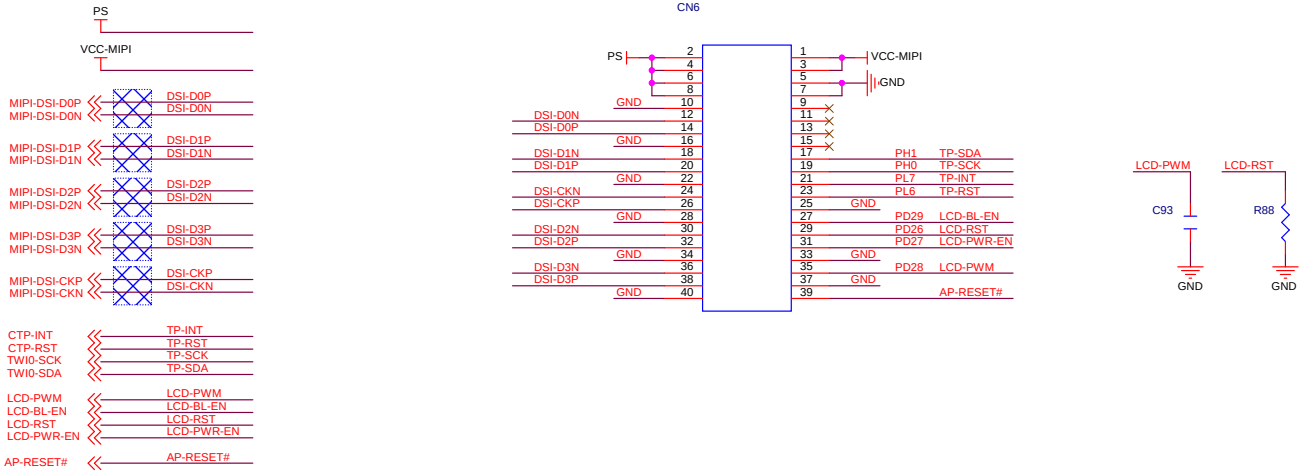

	SINOVOIP CO.,LIMITED	
	Design Name: BPI-M3	
http://www.banana-pi.org	Size: A3 / Page Name: HDMI-MIPI DSI	Rev: V1.1
	Date: Friday, October 16, 2015	Sheet 12 of 16

CAMERA

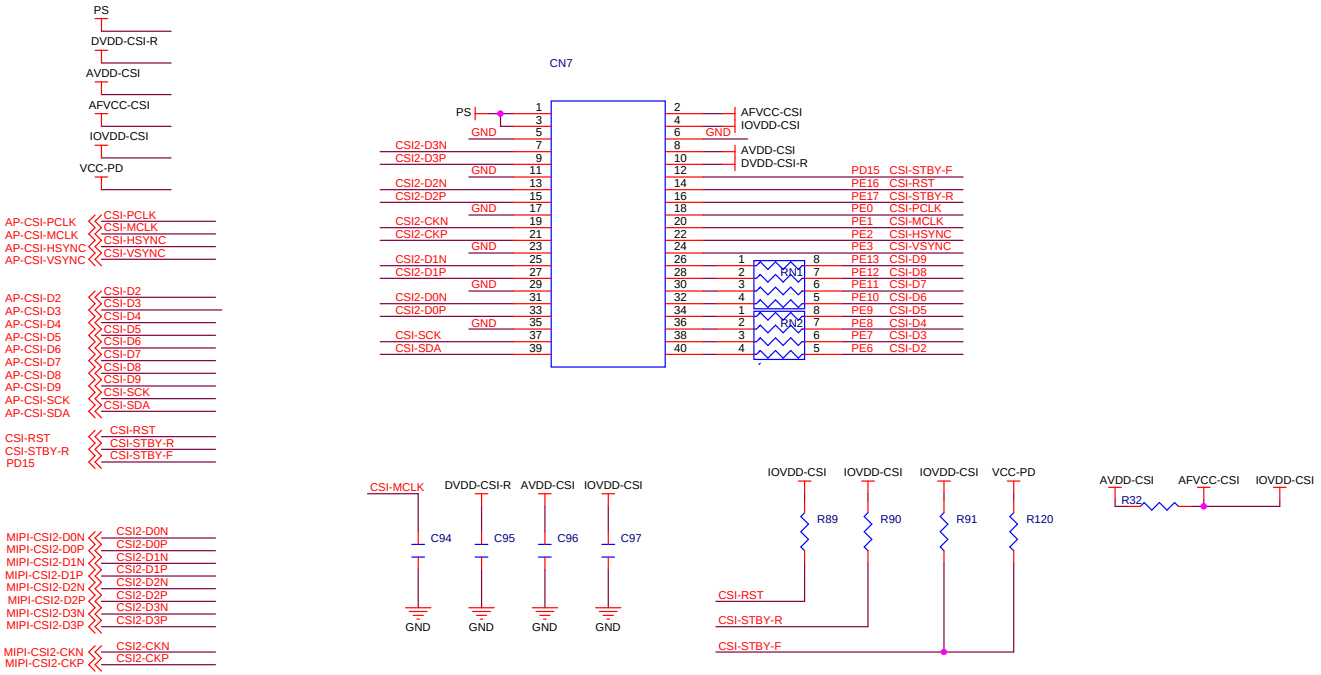

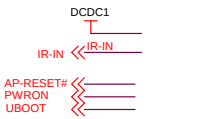

KEYs

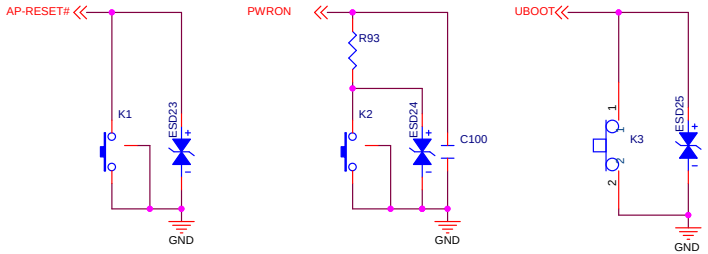

IR MODULE

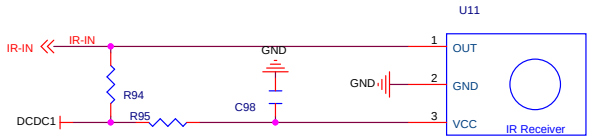

SINOVOIP CO.,LIMITED		
Design Name: BPI-M3		
Size: A3	Page Name: CAMERA-IR-KEYs	Rev: V1.1
Date: Friday, October 16, 2015	Sheet 13 of 16	

http://www.banana-pi.org

SDIO WIFI+BT

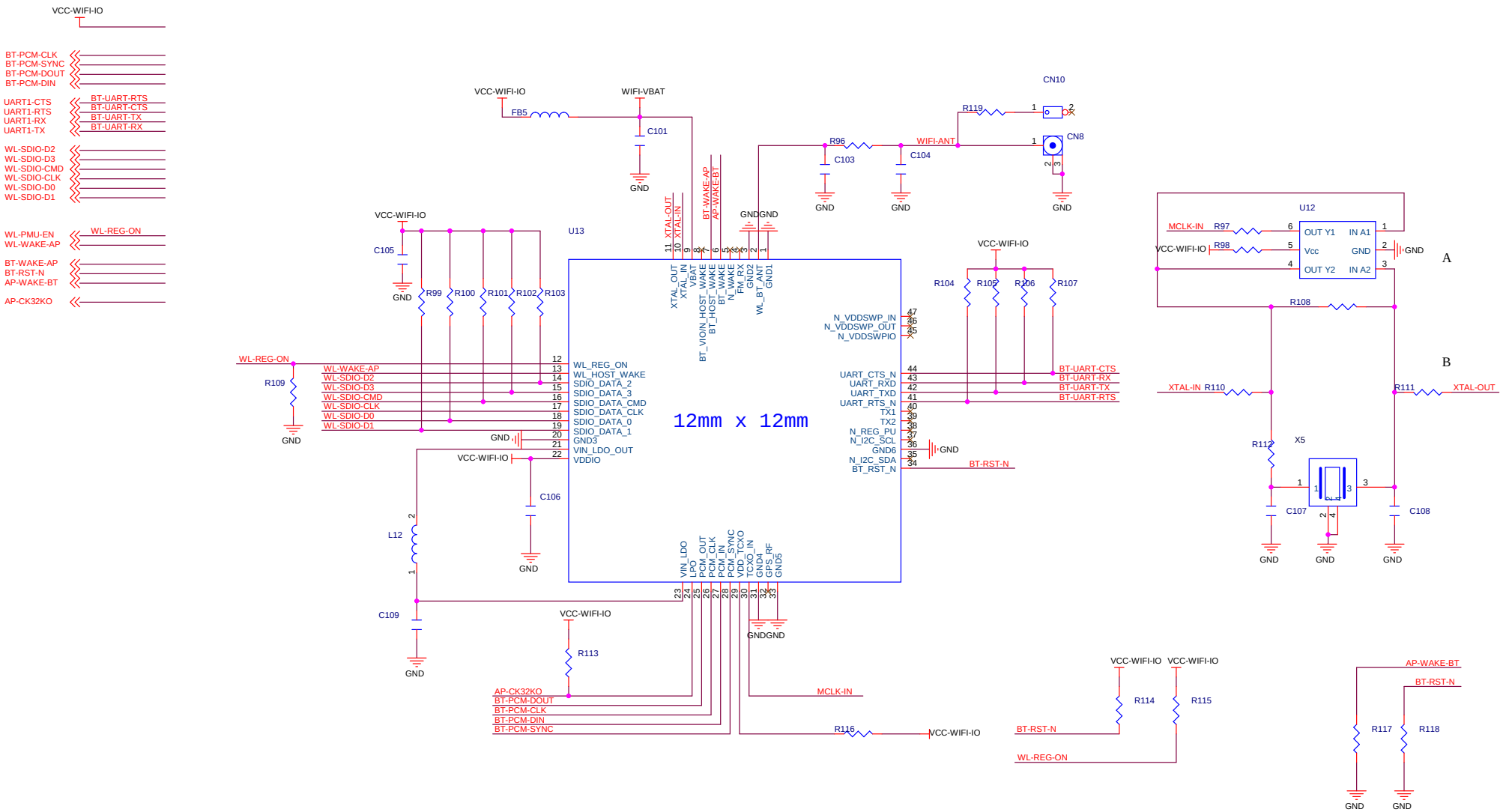

SINOVOIP CO.,LIMITED		
Design Name	BPI-M3	
Size A3	Page Name WIFI+BT	Rev V1.0
Date: Friday, October 16, 2015	Sheet 14 of 16	

http://www.banana-pi.org

GMAC

10/100/1000 RGMII Ethernet PHY

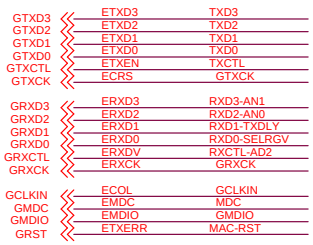

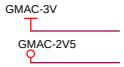

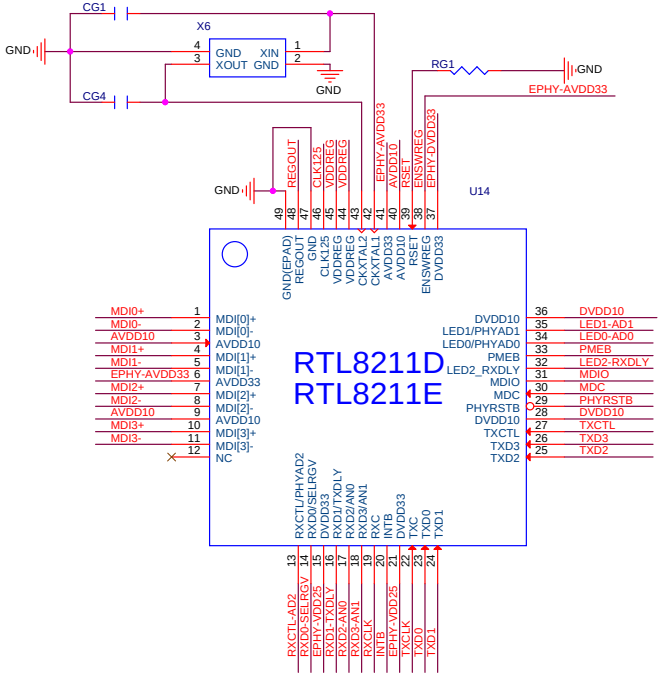

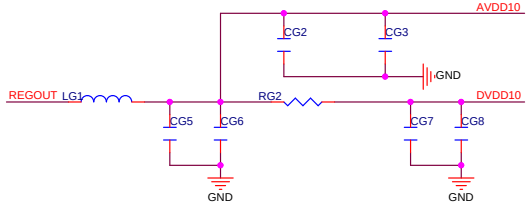

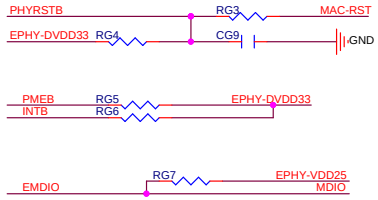

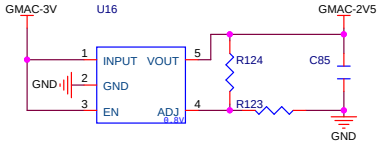

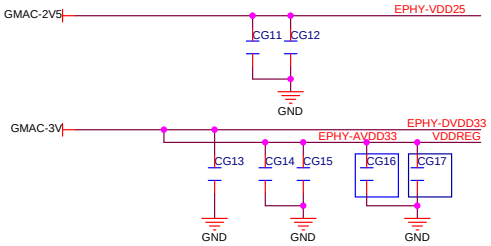

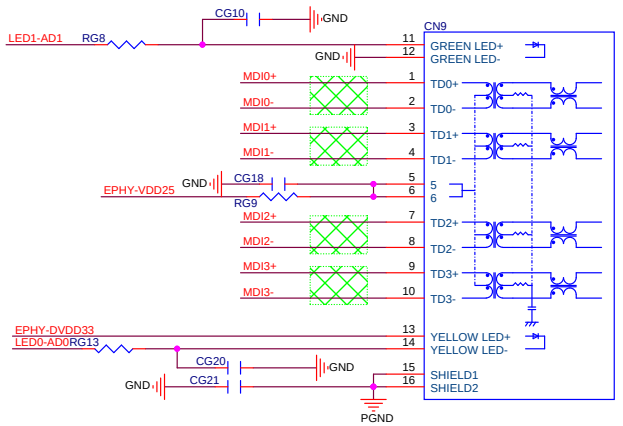

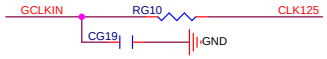

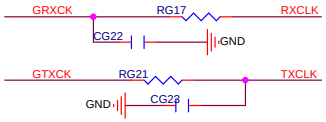

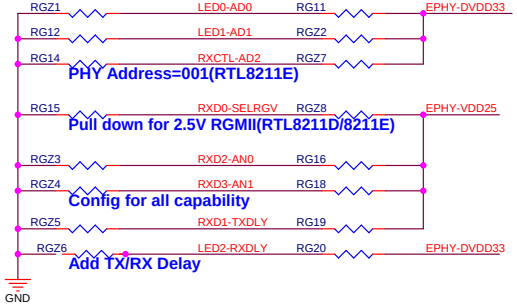

bpi http://www.banana-pi.org	SINOVOIP CO.,LIMITED	
	Design Name: BPI-M3	
Size: A3	Page Name: GMAC	Rev: 1.1
Date: Friday, October 16, 2015	Sheet 15 of 16	

EXT PORT

EXT

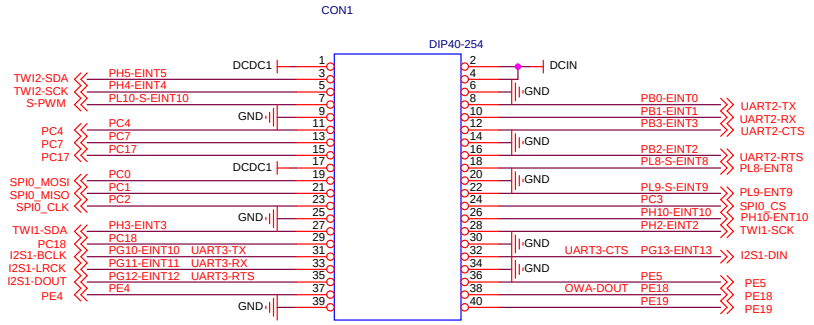

DEBUG

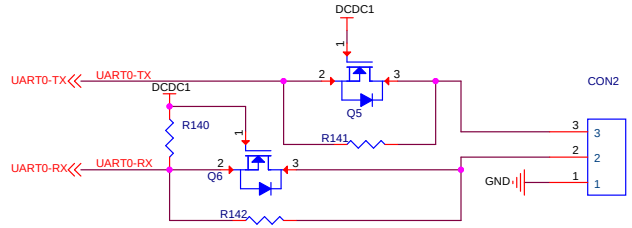

USB

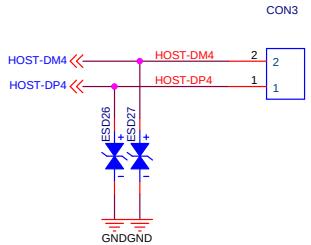

SINOVOIP CO.,LIMITED		
Design Name: BPI-M3		
Size: A3	Page Name: EXT PORT	Rev: V1.1
http://www.banana-pi.org	Date: Friday, October 16, 2015	Sheet 16 of 16