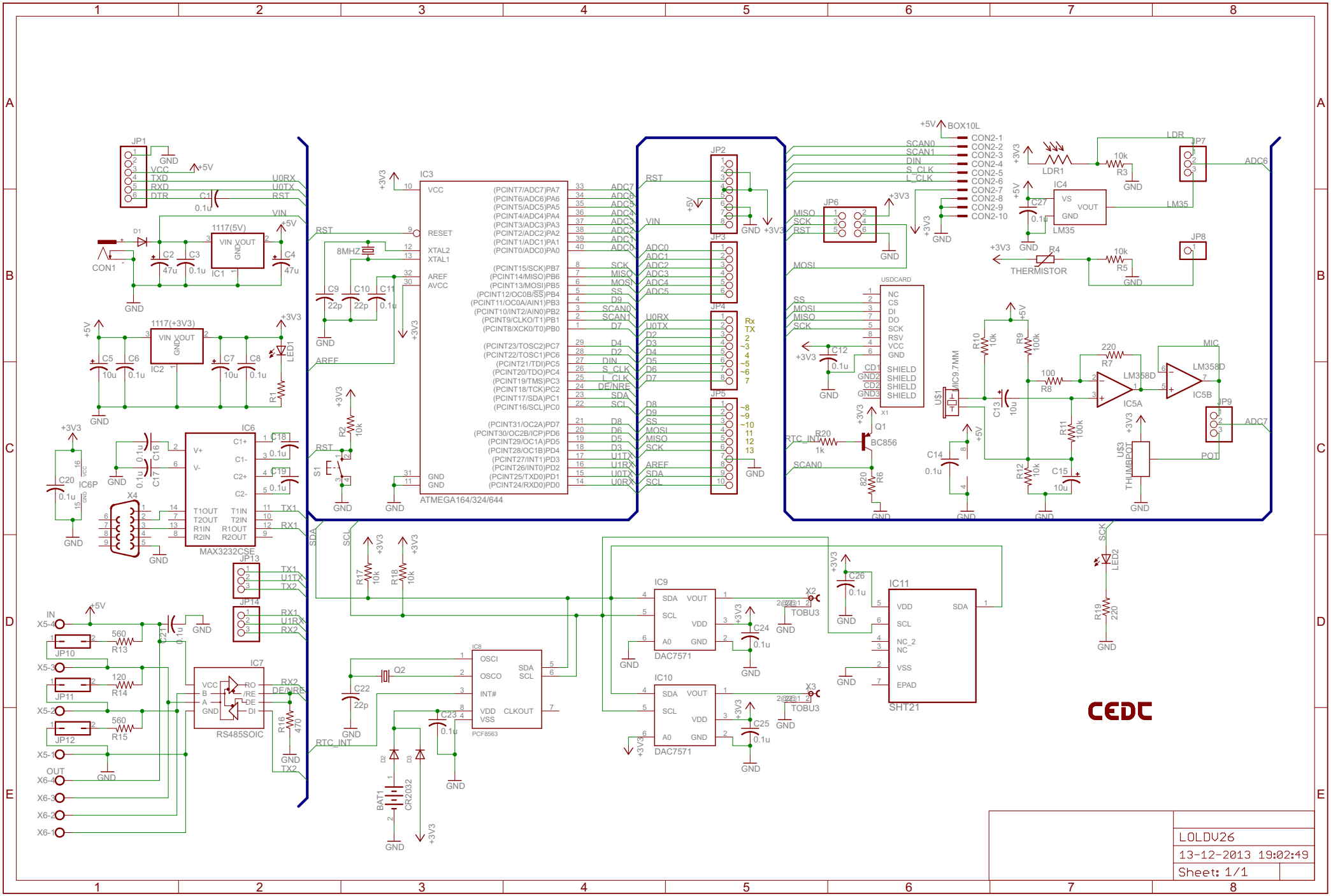
JP1
VCC
TXD
RXD
DTR
GND
+5V
U0RX
U0TX
RST
VIN
CON1
D1
1117(5V)
IC1
C1
0.1u
C2
47u
C3
0.1u
C4
47u
1117(+3V3)
IC2
C5
10u
C6
0.1u
C7
10u
C8
0.1u
+3V3
LED1
R1
IC3
ATMEGA164/324/644
VCC
RESET
XTAL2
XTAL1
AREF
AVCC
8MHZ
C9
22p
C10
22p
C11
0.1u
R2
10k
S1
JP2
JP3
JP4
JP5
Rx
TX
IC6
MAX3232CSE
C16
C17
C18
C19
C20
0.1u
IC6P
X4
TX1
RX1
JP13
JP14
U1TX
U1RX
TX2
RX2
IN
X5-4
X5-3
X5-2
X5-1
OUT
X6-4
X6-3
X6-2
X6-1
JP10
JP11
JP12
560
R13
120
R14
560
R15
C21
0.1u
IC7
RS485SOIC
VCC
B
A
GND
RO
/RE
DE
DI
DE/NRE
R16
470
R17
10k
R18
10k
IC8
PCF8563
OSCI
OSCO
INT#
VDD
VSS
SDA
SCL
CLKOUT
Q2
C22
22p
C23
0.1u
RTC_INT
BAT1
CR2032
D2
D3
IC9
DAC7571
IC10
DAC7571
VOUT
A0
X2
X3
TOBU3
C24
0.1u
C25
0.1u
C26
0.1u
IC11
SHT21
VDD
SCL
NC_2
NC
VSS
EPAD
LED2
R19
220
BOX10L
CON2-1
CON2-2
CON2-3
CON2-4
CON2-5
CON2-6
CON2-7
CON2-8
CON2-9
CON2-10
SCAN0
SCAN1
DIN
S_CLK
L_CLK
JP6
MISO
SCK
RST
MOSI
SS
USDCARD
NC
CS
DI
DO
SCK
RSV
VCC
GND
CD1
GND2
CD2
GND3
SHIELD
X1
C12
0.1u
Q1
BC856
R20
1k
820
R6
RTC_INT
SCAN0
LDR
LDR1
10k
R3
JP7
ADC6
IC4
LM35
VS
VOUT
C27
0.1u
THERMISTOR
R4
10k
R5
JP8
R10
10k
R9
100k
100
R8
220
R7
LM358D
IC5A
IC5B
MIC
US1
MIC9.7MM
C13
10u
C14
0.1u
R11
100k
R12
10k
C15
10u
US3
THUMBPOT
JP9
ADC7
POT
CEDC
LOLDV26
13-12-2013 19:02:49
Sheet: 1/1