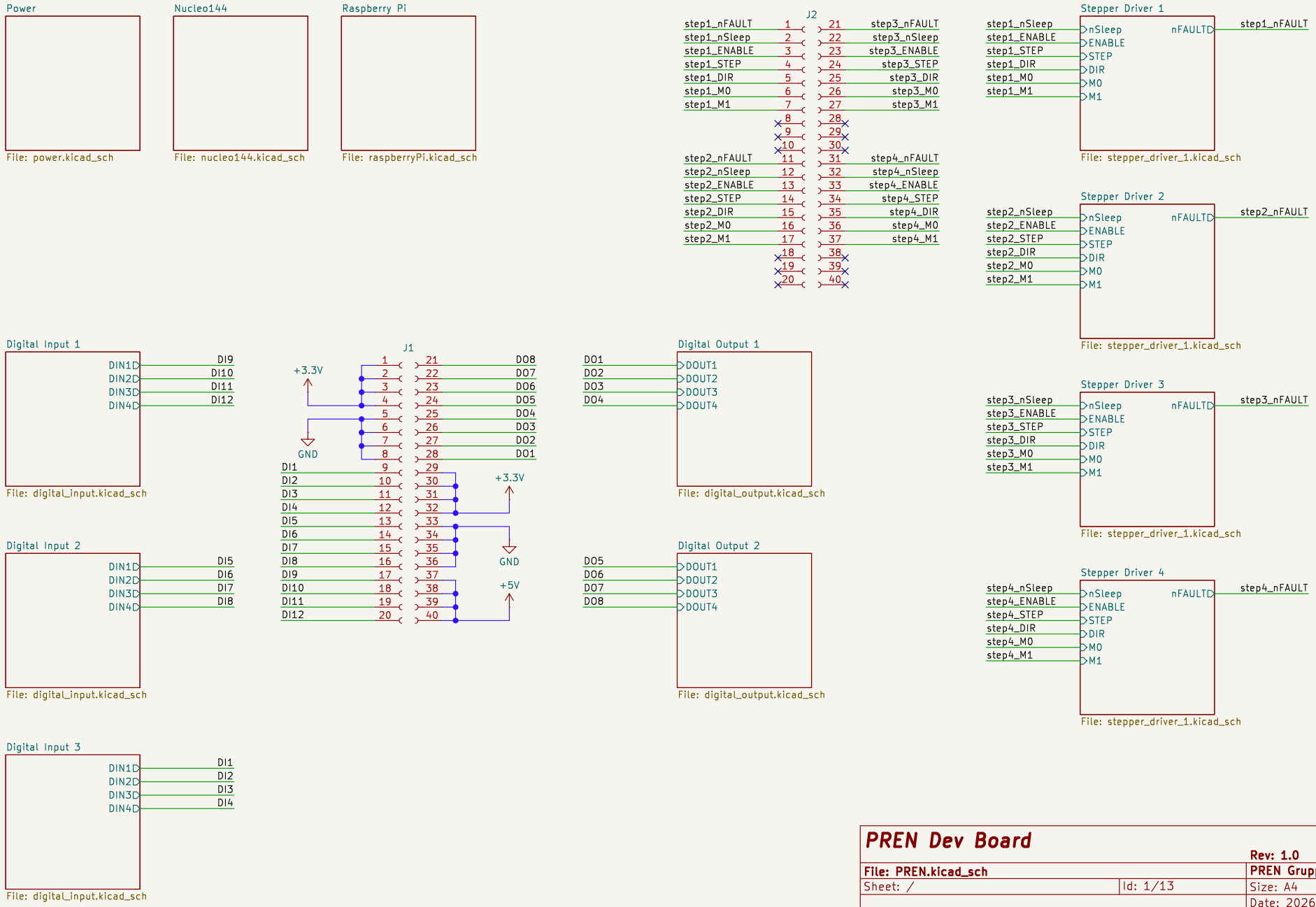

PREN Dev Board

File: PREN.kicad_sch	Rev: 1.0
Sheet: /	Id: 1/13
	PREN Gruppe 17
	Size: A4
	Date: 2026-02-13
	KiCad E.D.A. 9.0.7

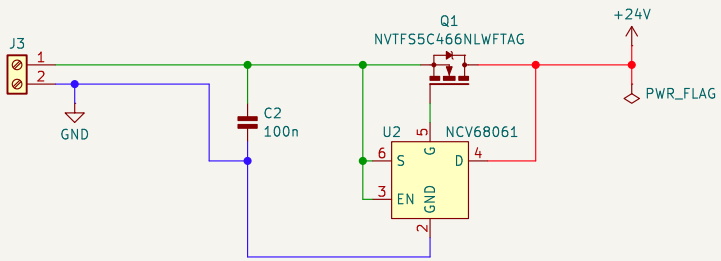

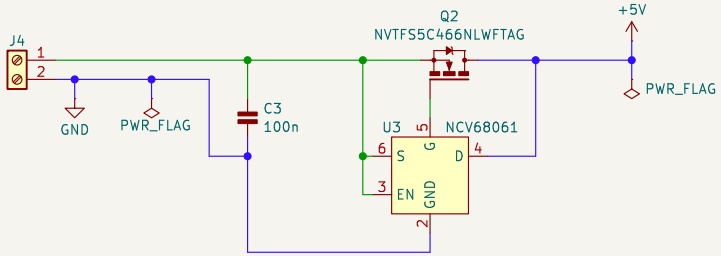

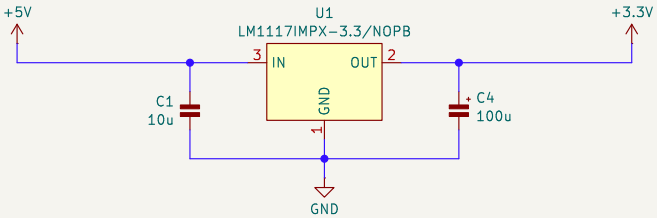

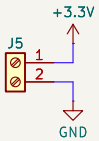

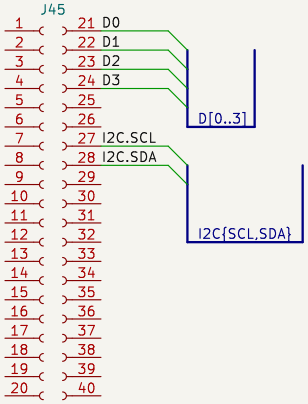

PREN Dev Board

File: power.kicad_sch	Rev: 1.0
Sheet: /Power/	Id: 2/13
	PREN Gruppe 17
	Size: A4
	Date: 2026-02-13
	KiCad E.D.A. 9.0.7

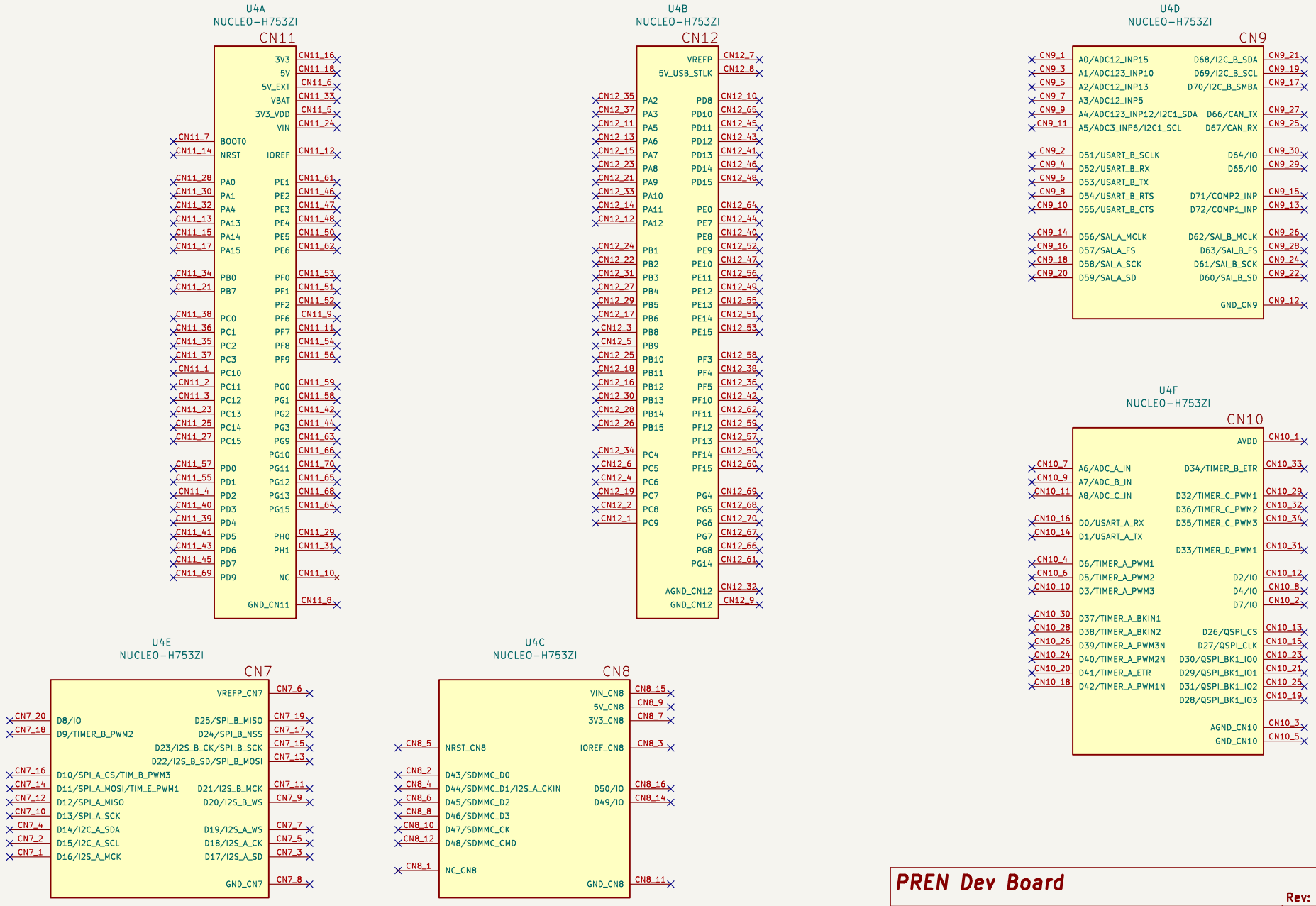
U4A
NUCLEO-H753ZI
CN11
3V3 CN11_16
5V CN11_18
5V_EXT CN11_6
VBAT CN11_33
3V3_VDD CN11_5
VIN CN11_24
CN11_7 BOOT0
CN11_14 NRST
IOREF CN11_12
CN11_28 PA0
CN11_30 PA1
CN11_32 PA4
CN11_13 PA13
CN11_15 PA14
CN11_17 PA15
CN11_34 PB0
CN11_21 PB7
CN11_38 PC0
CN11_36 PC1
CN11_35 PC2
CN11_37 PC3
CN11_1 PC10
CN11_2 PC11
CN11_3 PC12
CN11_23 PC13
CN11_25 PC14
CN11_27 PC15
CN11_57 PD0
CN11_55 PD1
CN11_4 PD2
CN11_40 PD3
CN11_39 PD4
CN11_41 PD5
CN11_43 PD6
CN11_45 PD7
CN11_69 PD9
PE1 CN11_61
PE2 CN11_46
PE3 CN11_47
PE4 CN11_48
PE5 CN11_50
PE6 CN11_62
PF0 CN11_53
PF1 CN11_51
PF2 CN11_52
PF6 CN11_9
PF7 CN11_11
PF8 CN11_54
PF9 CN11_56
PG0 CN11_59
PG1 CN11_58
PG2 CN11_42
PG3 CN11_44
PG9 CN11_63
PG10 CN11_66
PG11 CN11_70
PG12 CN11_65
PG13 CN11_68
PG15 CN11_64
PH0 CN11_29
PH1 CN11_31
NC CN11_10
GND_CN11 CN11_8
U4B
NUCLEO-H753ZI
CN12
VREFP CN12_7
5V_USB_STLK CN12_8
CN12_35 PA2
CN12_37 PA3
CN12_11 PA5
CN12_13 PA6
CN12_15 PA7
CN12_23 PA8
CN12_21 PA9
CN12_33 PA10
CN12_14 PA11
CN12_12 PA12
CN12_24 PB1
CN12_22 PB2
CN12_31 PB3
CN12_27 PB4
CN12_29 PB5
CN12_17 PB6
CN12_3 PB8
CN12_5 PB9
CN12_25 PB10
CN12_18 PB11
CN12_16 PB12
CN12_30 PB13
CN12_28 PB14
CN12_26 PB15
CN12_34 PC4
CN12_6 PC5
CN12_4 PC6
CN12_19 PC7
CN12_2 PC8
CN12_1 PC9
PD8 CN12_10
PD10 CN12_65
PD11 CN12_45
PD12 CN12_43
PD13 CN12_41
PD14 CN12_46
PD15 CN12_48
PE0 CN12_64
PE7 CN12_44
PE8 CN12_40
PE9 CN12_52
PE10 CN12_47
PE11 CN12_56
PE12 CN12_49
PE13 CN12_55
PE14 CN12_51
PE15 CN12_53
PF3 CN12_58
PF4 CN12_38
PF5 CN12_36
PF10 CN12_42
PF11 CN12_62
PF12 CN12_59
PF13 CN12_57
PF14 CN12_50
PF15 CN12_60
PG4 CN12_69
PG5 CN12_68
PG6 CN12_70
PG7 CN12_67
PG8 CN12_66
PG14 CN12_61
AGND_CN12 CN12_32
GND_CN12 CN12_9
U4D
NUCLEO-H753ZI
CN9
CN9_1 A0/ADC12_INP15
CN9_3 A1/ADC123_INP10
CN9_5 A2/ADC12_INP13
CN9_7 A3/ADC12_INP5
CN9_9 A4/ADC123_INP12/I2C1_SDA
CN9_11 A5/ADC3_INP6/I2C1_SCL
CN9_2 D51/USART_B_SCLK
CN9_4 D52/USART_B_RX
CN9_6 D53/USART_B_TX
CN9_8 D54/USART_B_RTS
CN9_10 D55/USART_B_CTS
CN9_14 D56/SAI_A_MCLK
CN9_16 D57/SAI_A_FS
CN9_18 D58/SAI_A_SCK
CN9_20 D59/SAI_A_SD
D68/I2C_B_SDA CN9_21
D69/I2C_B_SCL CN9_19
D70/I2C_B_SMBA CN9_17
D66/CAN_TX CN9_27
D67/CAN_RX CN9_25
D64/IO CN9_30
D65/IO CN9_29
D71/COMP2_INP CN9_15
D72/COMP1_INP CN9_13
D62/SAI_B_MCLK CN9_26
D63/SAI_B_FS CN9_28
D61/SAI_B_SCK CN9_24
D60/SAI_B_SD CN9_22
GND_CN9 CN9_12
U4F
NUCLEO-H753ZI
CN10
AVDD CN10_1
CN10_7 A6/ADC_A_IN
CN10_9 A7/ADC_B_IN
CN10_11 A8/ADC_C_IN
CN10_16 D0/USART_A_RX
CN10_14 D1/USART_A_TX
CN10_4 D6/TIMER_A_PWM1
CN10_6 D5/TIMER_A_PWM2
CN10_10 D3/TIMER_A_PWM3
CN10_30 D37/TIMER_A_BKIN1
CN10_28 D38/TIMER_A_BKIN2
CN10_26 D39/TIMER_A_PWM3N
CN10_24 D40/TIMER_A_PWM2N
CN10_20 D41/TIMER_A_ETR
CN10_18 D42/TIMER_A_PWM1N
D34/TIMER_B_ETR CN10_33
D32/TIMER_C_PWM1 CN10_29
D36/TIMER_C_PWM2 CN10_32
D35/TIMER_C_PWM3 CN10_34
D33/TIMER_D_PWM1 CN10_31
D2/IO CN10_12
D4/IO CN10_8
D7/IO CN10_2
D26/QSPI_CS CN10_13
D27/QSPI_CLK CN10_15
D30/QSPI_BK1_IO0 CN10_23
D29/QSPI_BK1_IO1 CN10_21
D31/QSPI_BK1_IO2 CN10_25
D28/QSPI_BK1_IO3 CN10_19
AGND_CN10 CN10_3
GND_CN10 CN10_5
U4E
NUCLEO-H753ZI
CN7
VREFP_CN7 CN7_6
CN7_20 D8/IO
CN7_18 D9/TIMER_B_PWM2
CN7_16 D10/SPI_A_CS/TIM_B_PWM3
CN7_14 D11/SPI_A_MOSI/TIM_E_PWM1
CN7_12 D12/SPI_A_MISO
CN7_10 D13/SPI_A_SCK
CN7_4 D14/I2C_A_SDA
CN7_2 D15/I2C_A_SCL
CN7_1 D16/I2S_A_MCK
D25/SPI_B_MISO CN7_19
D24/SPI_B_NSS CN7_17
D23/I2S_B_CK/SPI_B_SCK CN7_15
D22/I2S_B_SD/SPI_B_MOSI CN7_13
D21/I2S_B_MCK CN7_11
D20/I2S_B_WS CN7_9
D19/I2S_A_WS CN7_7
D18/I2S_A_CK CN7_5
D17/I2S_A_SD CN7_3
GND_CN7 CN7_8
U4C
NUCLEO-H753ZI
CN8
VIN_CN8 CN8_15
5V_CN8 CN8_9
3V3_CN8 CN8_7
CN8_5 NRST_CN8
IOREF_CN8 CN8_3
CN8_2 D43/SDMMC_D0
CN8_4 D44/SDMMC_D1/I2S_A_CKIN
CN8_6 D45/SDMMC_D2
CN8_8 D46/SDMMC_D3
CN8_10 D47/SDMMC_CK
CN8_12 D48/SDMMC_CMD
CN8_1 NC_CN8
D50/IO CN8_16
D49/IO CN8_14
GND_CN8 CN8_11
PREN Dev Board
Rev: 1.0
File: nucleo144.kicad_sch
PREN Gruppe 17
Sheet: /Nucleo144/
Id: 3/13
Size: A4
Date: 2026-02-13
KiCad E.D.A. 9.0.7

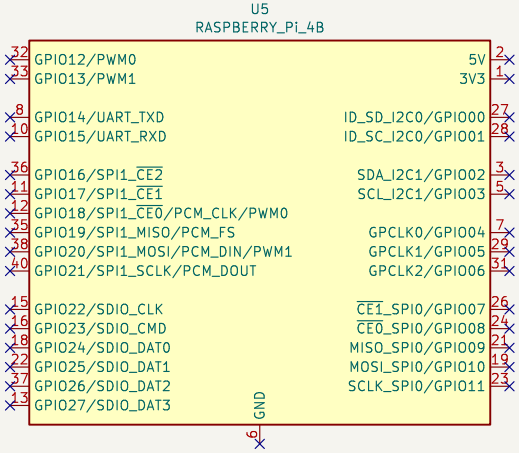

PREN Dev Board

Rev: 1.0

File: raspberryPi.kicad_sch

PREN Gruppe 17

Sheet: /Raspberry Pi/

Id: 4/13

Size: A4

Date: 2026-02-13

KiCad E.D.A. 9.0.7

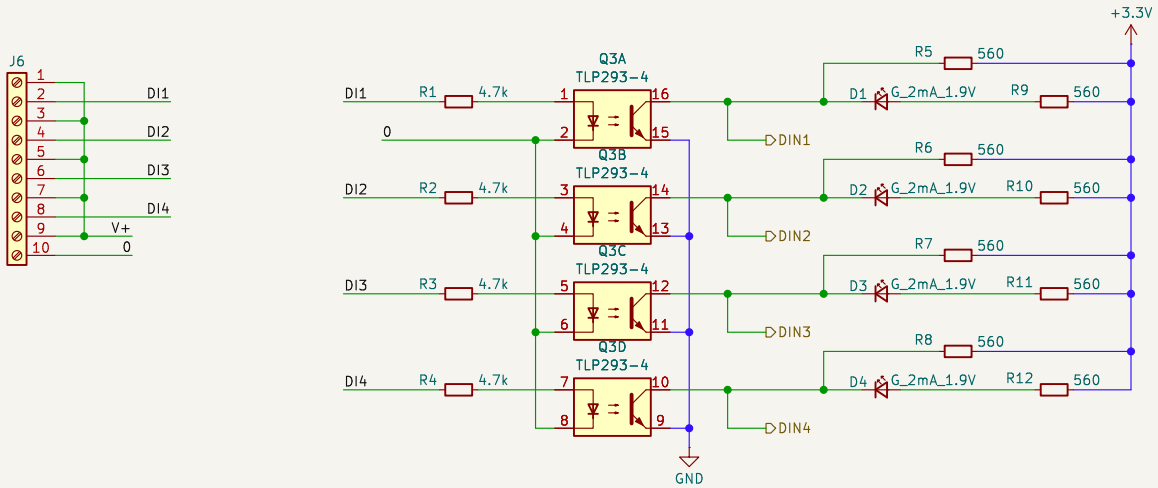

PREN Dev Board

File: digital_input.kicad_sch	Rev: 1.0
Sheet: /Digital Input 1/	Id: 5/13
	PREN Gruppe 17
	Size: A4
	Date: 2026-02-13
	KiCad E.D.A. 9.0.7

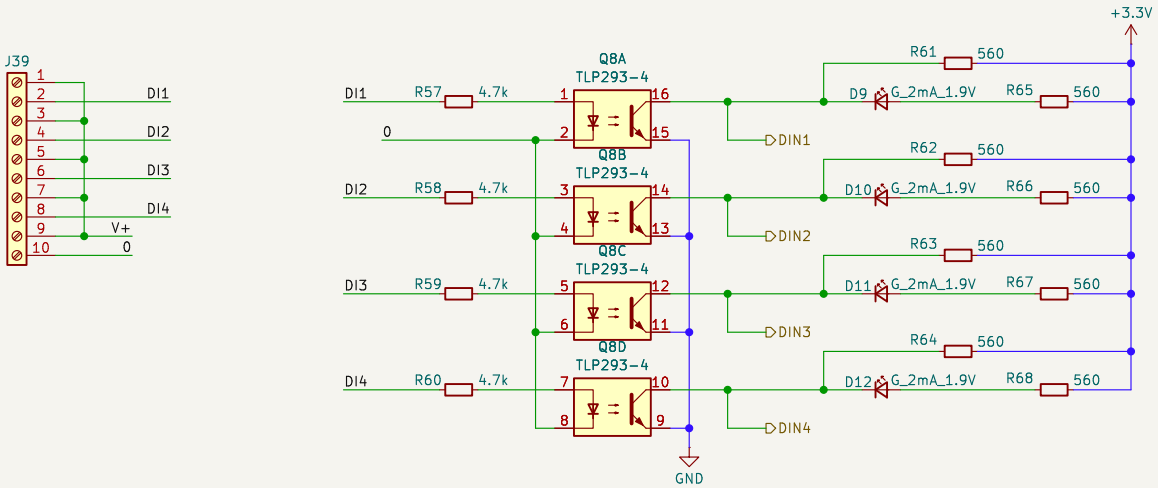

PREN Dev Board

File: digital_input.kicad_sch	Rev: 1.0
Sheet: /Digital Input 2/ Id: 6/13	PREN Gruppe 17
	Size: A4
	Date: 2026-02-13
	KiCad E.D.A. 9.0.7

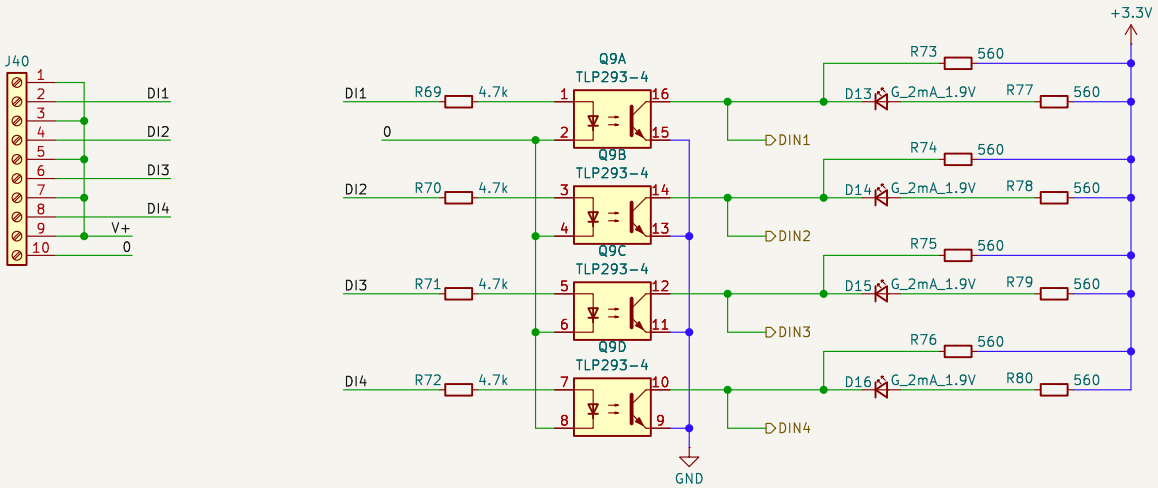

PREN Dev Board

File: digital_input.kicad_sch	Rev: 1.0
Sheet: /Digital Input 3/	Id: 7/13
	PREN Gruppe 17
	Size: A4
	Date: 2026-02-13
	KiCad E.D.A. 9.0.7

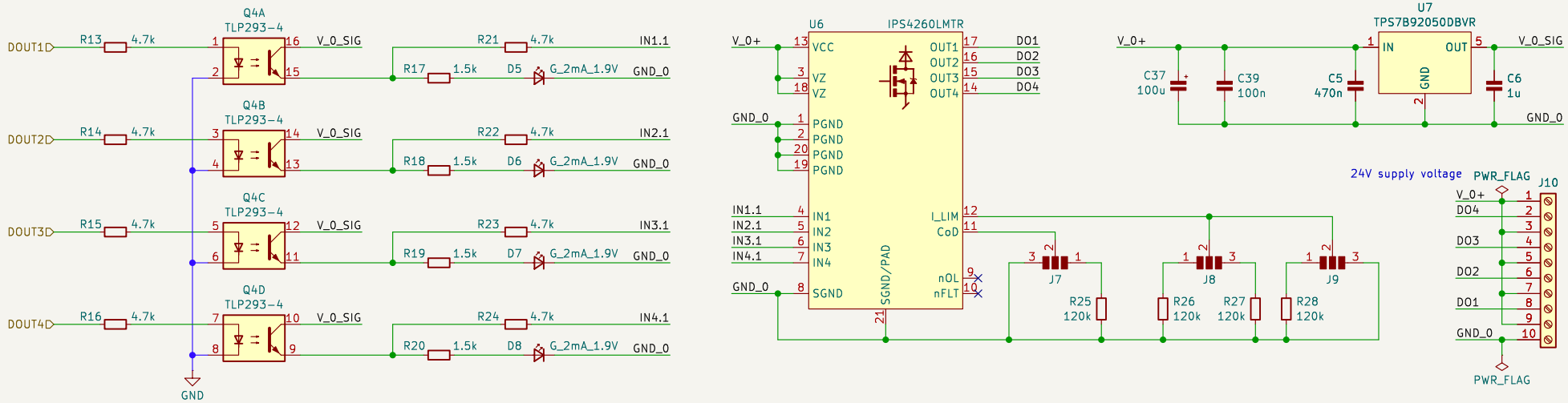

PREN Dev Board

File: digital_output.kicad_sch	Rev: 1.0
Sheet: /Digital Output 1/	Id: 8/13
	PREN Gruppe 17
	Size: A4
	Date: 2026-02-13
	KiCad E.D.A. 9.0.7

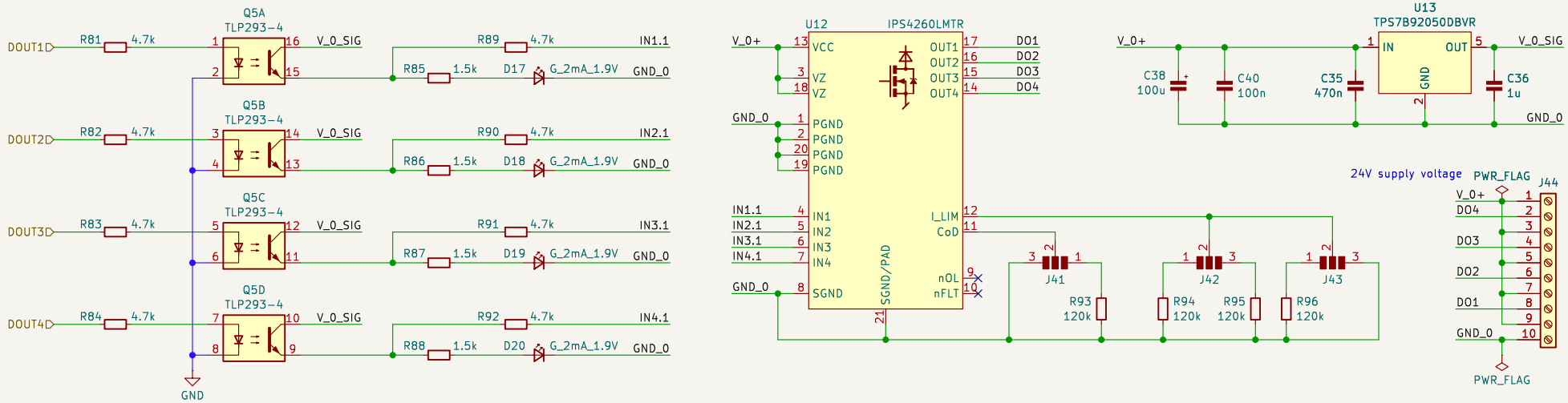

PREN Dev Board

File: digital_output.kicad_sch	Rev: 1.0
Sheet: /Digital Output 2/	Id: 9/13
	PREN Gruppe 17
	Size: A4
	Date: 2026-02-13
	KiCad E.D.A. 9.0.7

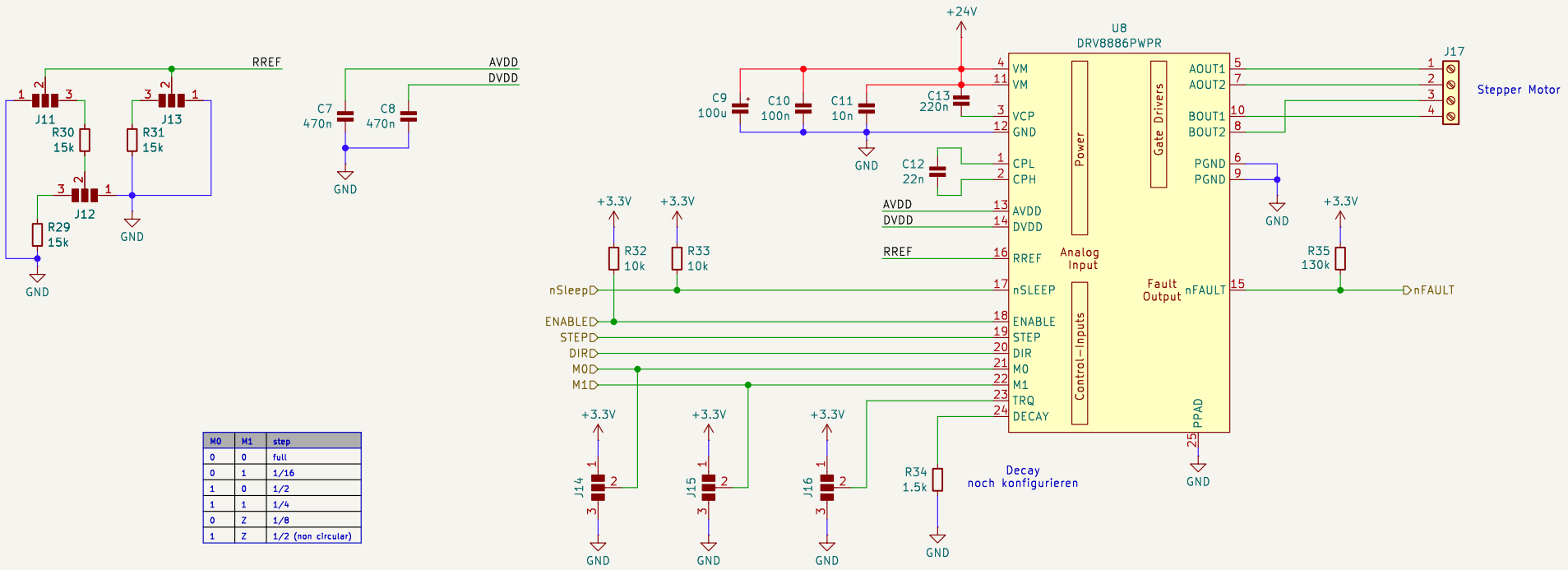

M0	M1	step
0	0	full
0	1	1/16
1	0	1/2
1	1	1/4
0	Z	1/8
1	Z	1/2 (non circular)

PREN Dev Board

Rev: 1.0

File: stepper_driver_1.kicad_sch

PREN Gruppe 17

Sheet: /Stepper Driver 1/

Id: 10/13

Size: A4

Date: 2026-02-13

KiCad E.D.A. 9.0.7

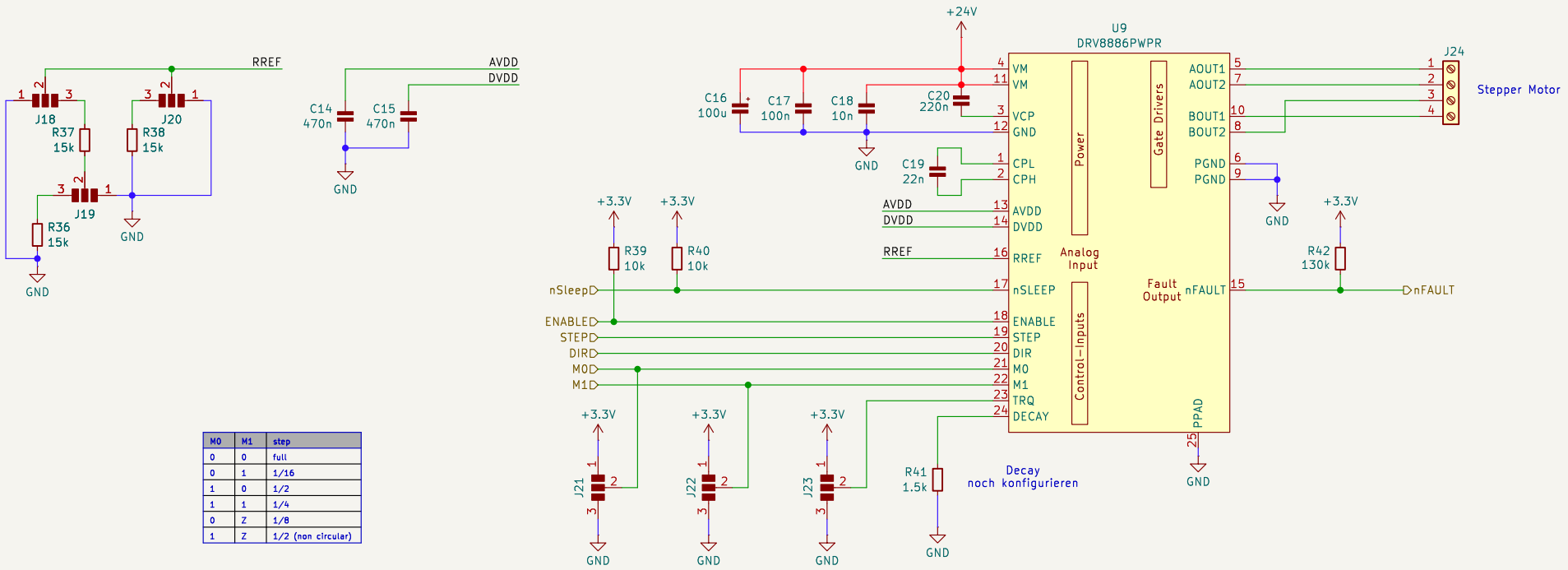

M0	M1	step
0	0	full
0	1	1/16
1	0	1/2
1	1	1/4
0	Z	1/8
1	Z	1/2 (non circular)

PREN Dev Board

Rev: 1.0

File: stepper_driver_1.kicad_sch

PREN Gruppe 17

Sheet: /Stepper Driver 2/

Id: 11/13

Size: A4

Date: 2026-02-13

KiCad E.D.A. 9.0.7

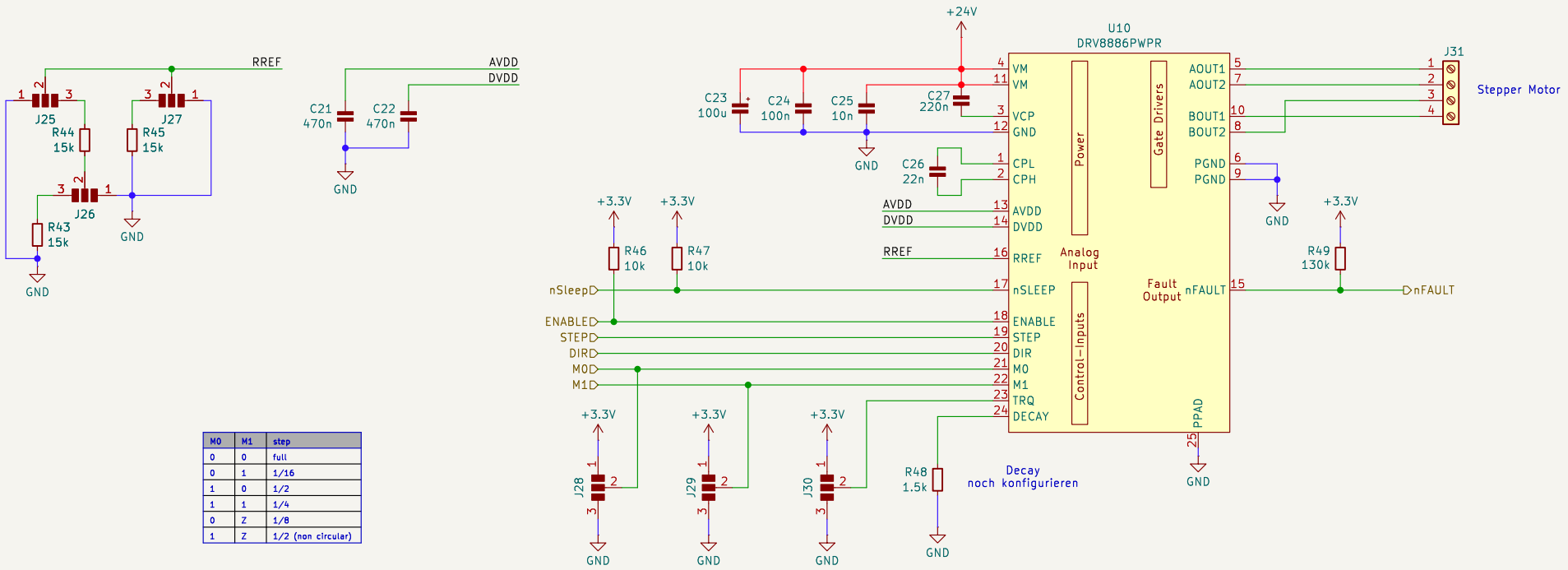

M0	M1	step
0	0	full
0	1	1/16
1	0	1/2
1	1	1/4
0	Z	1/8
1	Z	1/2 (non circular)

PREN Dev Board

Rev: 1.0

File: stepper_driver_1.kicad_sch

PREN Gruppe 17

Sheet: /Stepper Driver 3/

Id: 12/13

Size: A4

Date: 2026-02-13

KiCad E.D.A. 9.0.7

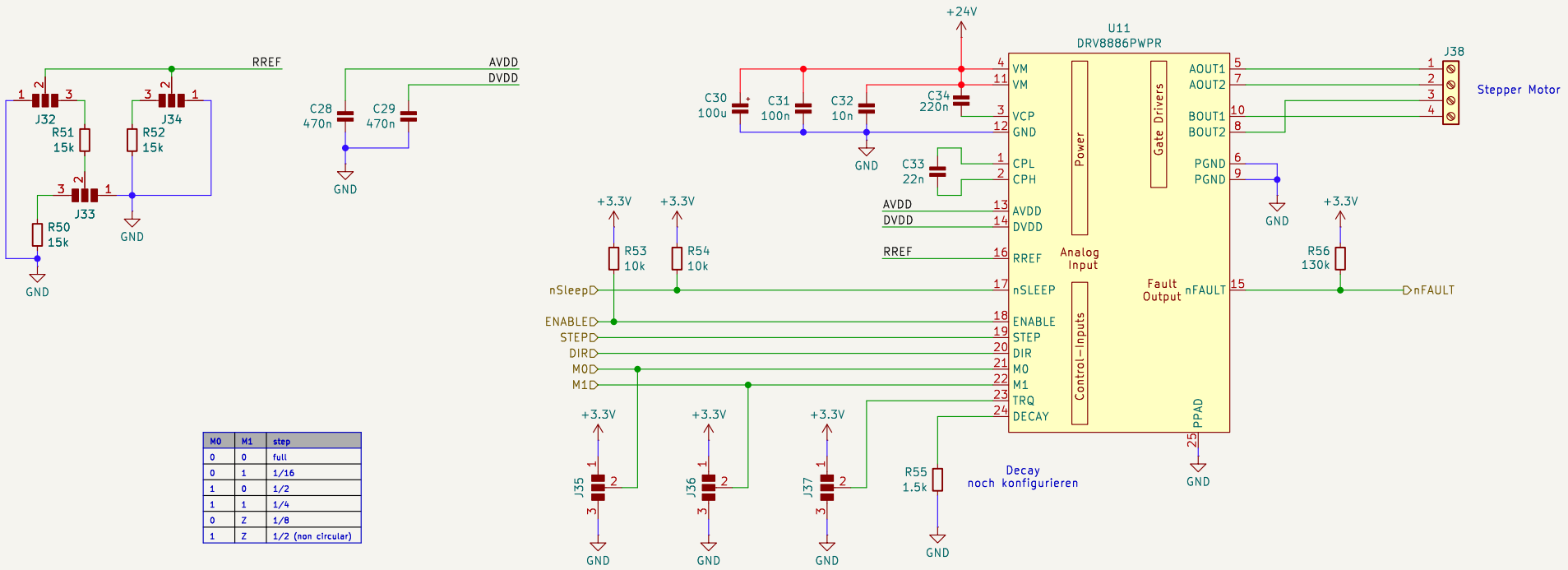

M0	M1	step
0	0	full
0	1	1/16
1	0	1/2
1	1	1/4
0	Z	1/8
1	Z	1/2 (non circular)

PREN Dev Board

Rev: 1.0

File: stepper_driver_1.kicad_sch

PREN Gruppe 17

Sheet: /Stepper Driver 4/

Id: 13/13

Size: A4

Date: 2026-02-13

KiCad E.D.A. 9.0.7