深圳市启烨科技有限公司
林先生
15818963559

Features

- **Single-Supply Operation from +1.8V ~ +5.5V**
- **Rail-to-Rail Input / Output**
- **Gain-Bandwidth Product: 1.8MHz (Typ@25°C)**
- **Low Input Bias Current: 20pA (Typ@25°C)**
- **Low Offset Voltage: 30μV (Max@25°C)**
- **Quiescent Current: 180μA per Amplifier (Typ)**
- **Operating Temperature: -45°C ~ +125°C**
- **Zero Drift: 0.01μV/°C (Typ)**
- **Embedded RF Anti-EMI Filter**
- **Small Package:**

GS8551 Available in SOT23-5 and SOP-8 Packages

GS8552 Available in MSOP-8 and SOP-8 Packages

GS8554 Available in SOP-14 and TSSOP-14 Packages

General Description

The GS855X amplifier is single/dual/quad supply, micro-power, zero-drift CMOS operational amplifiers, the amplifiers offer bandwidth of 1.8MHz, rail-to-rail inputs and outputs, and single-supply operation from 1.8V to 5.5V. GS855X uses chopper stabilized technique to provide very low offset voltage (less than 30μV maximum) and near zero drift over temperature. Low quiescent supply current of 180μA per amplifier and very low input bias current of 20pA make the devices an ideal choice for low offset, low power consumption and high impedance applications. The GS855X offers excellent CMRR without the crossover associated with traditional complementary input stages. This design results in superior performance for driving analog-to-digital converters (ADCs) without degradation of differential linearity.

The GS8551 is available in SOT23-5 and SOP-8 packages. And the GS8552 is available in MSOP-8 and SOP-8 packages. The GS8554 Quad is available in Green SOP-14 and TSSOP-14 packages. The extended temperature range of -45°C to +125°C over all supply voltages offers additional design flexibility.

Applications

- Transducer Application
- Temperature Measurements
- Electronics Scales
- Handheld Test Equipment
- Battery-Powered Instrumentation

Pin Configuration

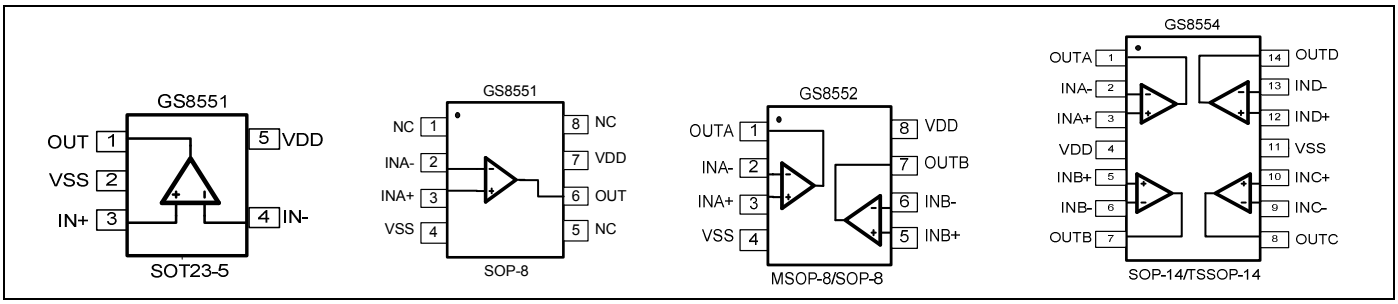

Figure 1. Pin Assignment Diagram

Absolute Maximum Ratings

Condition	Min	Max
Power Supply Voltage (V_{DD} to Vss)	-0.5V	+7.5V
Analog Input Voltage (IN+ or IN-)	Vss-0.5V	V_{DD}+0.5V
PDB Input Voltage	Vss-0.5V	+7V
Operating Temperature Range	-45°C	+125°C
Junction Temperature	+160°C	
Storage Temperature Range	-55°C	+150°C
Lead Temperature (soldering, 10sec)	+260°C	
Package Thermal Resistance (T_A=+25℃)		
SOP-8, θ_{JA}	125°C/W	
MSOP-8, θ_{JA}	216°C/W	
SOT23-5, θ_{JA}	190°C/W	
ESD Susceptibility		
HBM	6KV	
MM	400V	

Note: Stress greater than those listed under Absolute Maximum Ratings may cause permanent damage to the device. This is a stress rating only and functional operation of the device at these or any other conditions outside those indicated in the operational sections of this specification are not implied. Exposure to absolute maximum rating conditions for extended periods may affect reliability.

Package/Ordering Information

MODEL	CHANNEL	ORDER NUMBER	PACKAGE DESCRIPTION	PACKAGE OPTION	MARKING INFORMATION
GS8551	Single	GS8551-TR	SOT23-5	Tape and Reel,3000	8551
		GS8551-SR	SOP-8	Tape and Reel,4000	GS8551
GS8552	Dual	GS8552-SR	SOP-8	Tape and Reel,4000	GS8552
		GS8552-MR	MSOP-8	Tape and Reel,3000	GS8552
GS8554	Quad	GS8554-TR	TSSOP-14	Tape and Reel,3000	GS8554
		GS8554-SR	SOP-14	Tape and Reel,2500	GS8554

Electrical Characteristics

(V_S = +5V, V_{CM} = +2.5V, V_O = +2.5V, T_A = +25℃, unless otherwise noted.)

PARAMETER	CONDITIONS	MIN	TYP	MAX	UNITS
INPUT CHARACTERISTICS					
Input Offset Voltage (V_{OS})			1	30	μV
Input Bias Current (I_B)			20		pA
Input Offset Current (I_{OS})			10		pA
Common-Mode Rejection Ratio (CMRR)	V_{CM} = 0V to 5V		110		dB
Large Signal Voltage Gain (A_{VO})	R_L = 10kΩ, V_O = 0.3V to 4.7V		145		dB
Input Offset Voltage Drift ($\Delta V_{OS}/\Delta_T$)			10	50	nV/℃
OUTPUT CHARACTERISTICS					
Output Voltage High (V_{OH})	R_L = 100kΩ to - V_S		4.998		V
	R_L = 10kΩ to - V_S		4.994		V
Output Voltage Low (V_{OL})	R_L = 100kΩ to + V_S		2		mV
	R_L = 10kΩ to + V_S		5		mV
Short Circuit Limit (I_{SC})	R_L =10Ω to - V_S		60		mA
Output Current (I_O)			65		mA
POWER SUPPLY					
Power Supply Rejection Ratio (PSRR)	V_S = 2.5V to 5.5V		115		dB
Quiescent Current (I_Q)	V_O = 0V, R_L = 0Ω		180		μA
DYNAMIC PERFORMANCE					
Gain-Bandwidth Product (GBP)	G = +100		1.8		MHz
Slew Rate (SR)	R_L = 10kΩ		0.95		V/μs
Overload Recovery Time			0.10		ms
NOISE PERFORMANCE					
Voltage Noise (e_n p-p)	0Hz to 10Hz		0.3		μV_{P-P}
Voltage Noise Density (e_n)	f = 1kHz		38		$nV/\sqrt{Hz}$

Typical Performance characteristics

Large Signal Transient Response at +5V

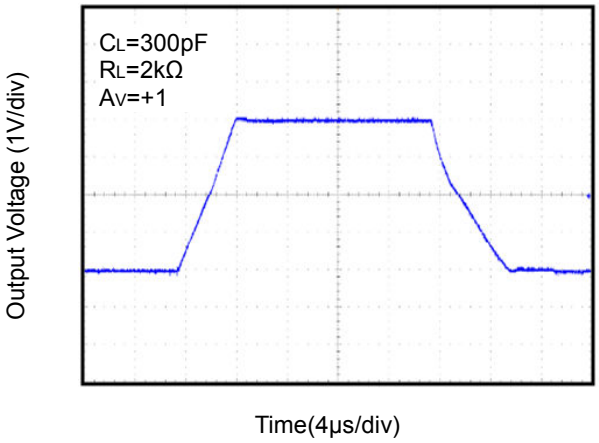

Large Signal Transient Response at +2.5V

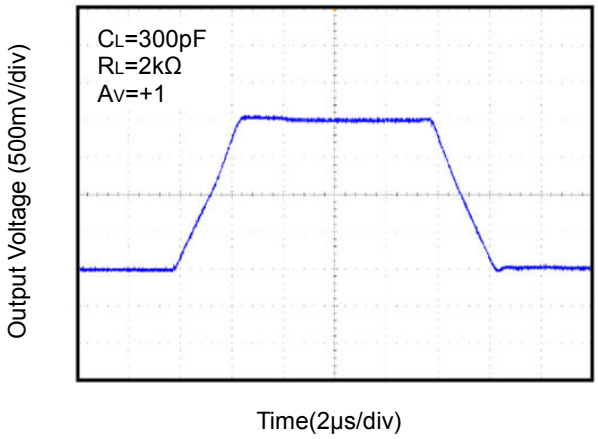

Small Signal Transient Response at +5V

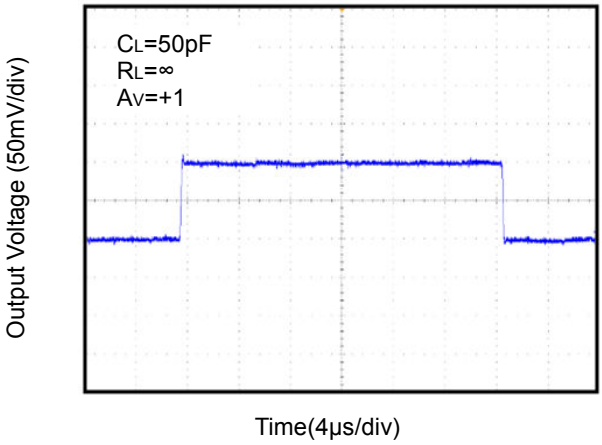

Small Signal Transient Response at +2.5V

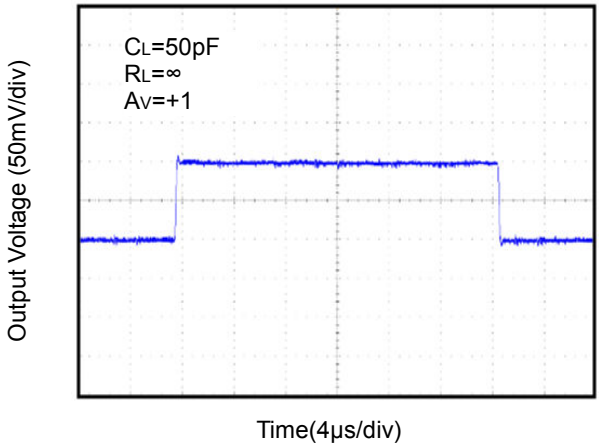

Closed Loop Gain vs. Frequency at +5V

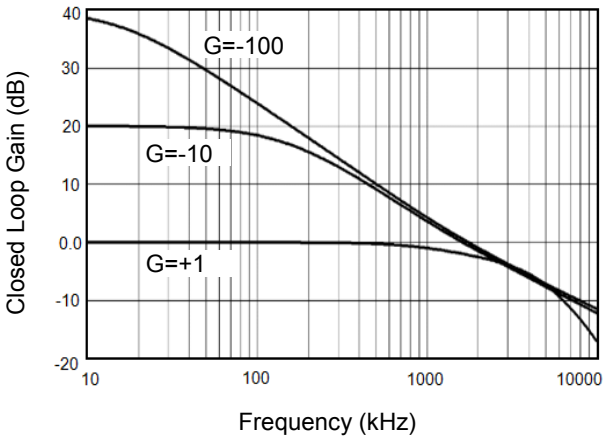

Closed Loop Gain vs. Frequency at +2.5V

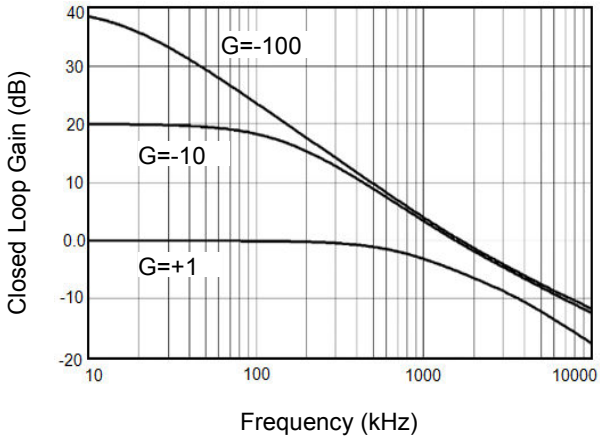

Typical Performance characteristics

Open Loop Gain, Phase Shift
vs. Frequency at +5V

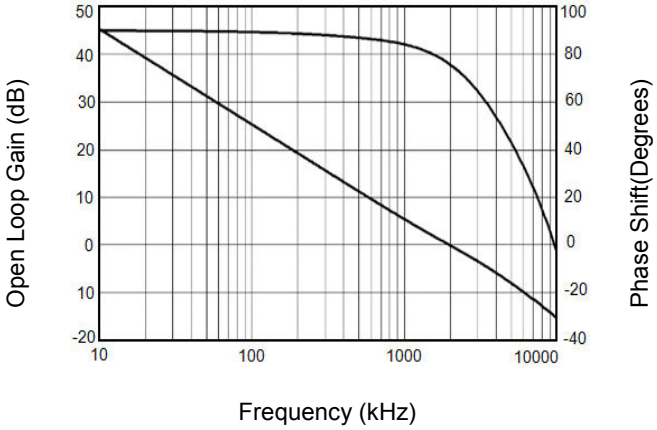

Open Loop Gain, Phase Shift
vs. Frequency at +2.5V

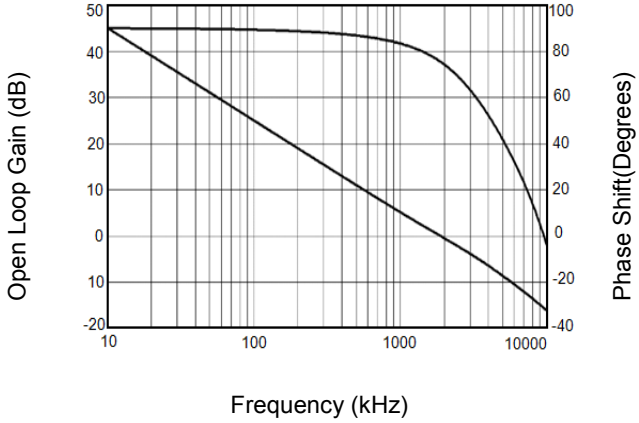

Positive Overvoltage Recovery

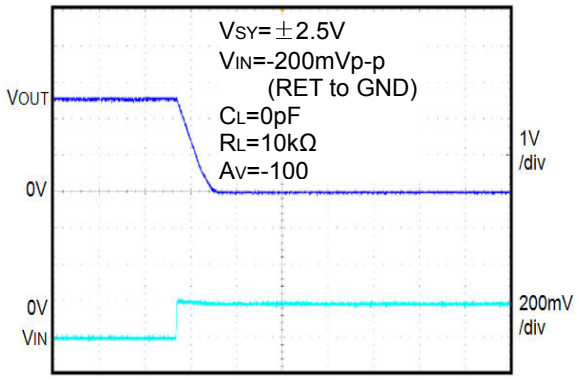

Negative Overvoltage Recovery

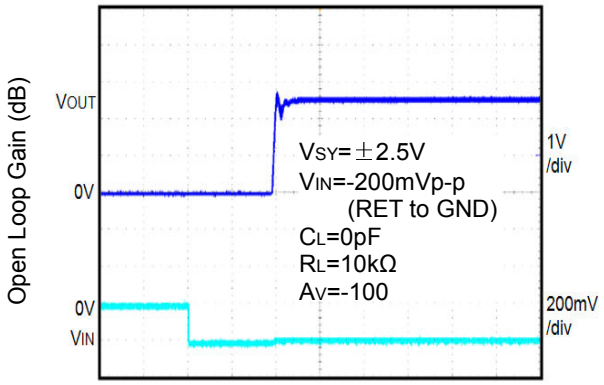

0.1Hz to 10Hz Noise at +5V

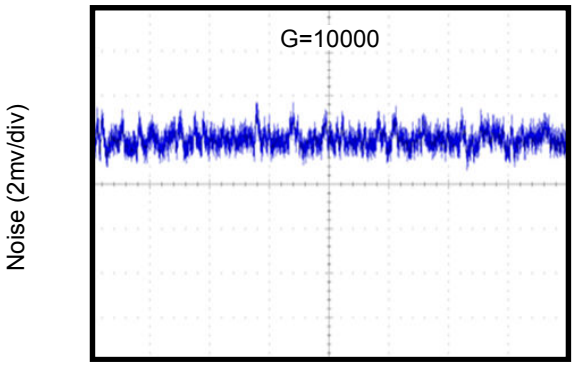

0.1Hz to 10Hz Noise at +2.5V

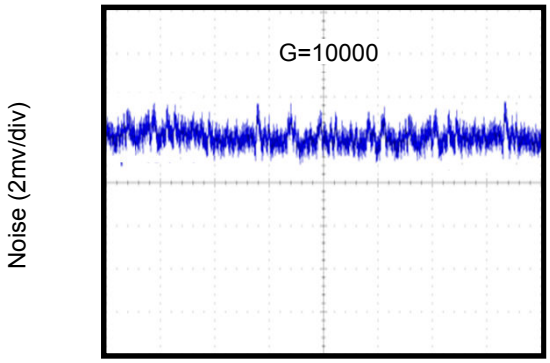

Application Note

Size

GS855X series op amps are unity-gain stable and suitable for a wide range of general-purpose applications. The small footprints of the GS855X series packages save space on printed circuit boards and enable the design of smaller electronic products.

Power Supply Bypassing and Board Layout

GS855X series operates from a single 1.8V to 5.5V supply or dual ±0.9V to ±2.75V supplies. For best performance, a 0.1μF ceramic capacitor should be placed close to the V_{DD} pin in single supply operation. For dual supply operation, both V_{DD} and V_{SS} supplies should be bypassed to ground with separate 0.1μF ceramic capacitors.

Low Supply Current

The low supply current (typical 180μA per channel) of GS855X series will help to maximize battery life. They are ideal for battery powered systems.

Operating Voltage

GS855X series operate under wide input supply voltage (1.8V to 5.5V). In addition, all temperature specifications apply from -40 °C to +125 °C. Most behavior remains unchanged throughout the full operating voltage range. These guarantees ensure operation throughout the single Li-Ion battery lifetime.

Rail-to-Rail Input

The input common-mode range of GS855X series extends 100mV beyond the supply rails (V_{SS}-0.1V to V_{DD}+0.1V). This is achieved by using complementary input stage. For normal operation, inputs should be limited to this range.

Rail-to-Rail Output

Rail-to-Rail output swing provides maximum possible dynamic range at the output. This is particularly important when operating in low supply voltages. The output voltage of GS855X series can typically swing to less than 5mV from supply rail in light resistive loads (>100kΩ), and 60mV of supply rail in moderate resistive loads (10kΩ).

Capacitive Load Tolerance

The GS855x family is optimized for bandwidth and speed, not for driving capacitive loads. Output capacitance will create a pole in the amplifier's feedback path, leading to excessive peaking and potential oscillation. If dealing with load capacitance is a requirement of the application, the two strategies to consider are (1) using a small resistor in series with the amplifier's output and the load capacitance and (2) reducing the bandwidth of the amplifier's feedback loop by increasing the overall noise gain. Figure 2. shows a unity gain follower using the series resistor strategy. The resistor isolates the output from the capacitance and, more importantly, creates a zero in the feedback path that compensates for the pole created by the output capacitance.

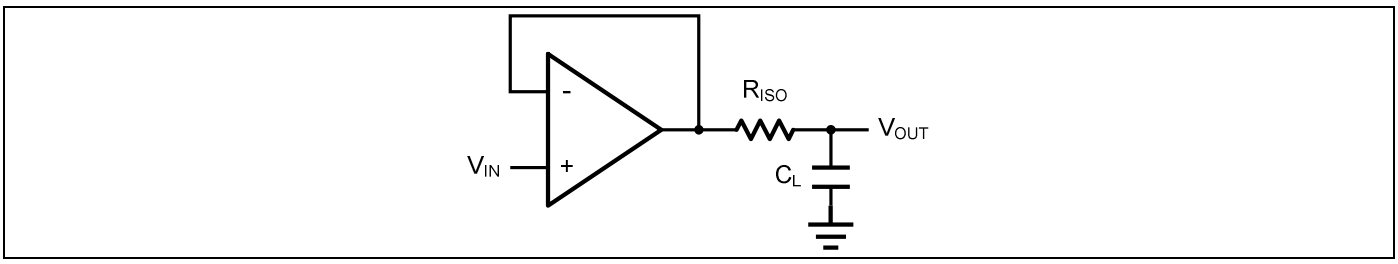

Figure 2. Indirectly Driving a Capacitive Load Using Isolation Resistor

The bigger the R_{ISO} resistor value, the more stable V_{OUT} will be. However, if there is a resistive load R_L in parallel with the capacitive load, a voltage divider (proportional to R_{ISO}/R_L) is formed, this will result in a gain error.

The circuit in Figure 3 is an improvement to the one in Figure 2. R_F provides the DC accuracy by feed-forward the V_{IN} to R_L. C_F and R_{ISO} serve to counteract the loss of phase margin by feeding the high frequency component of the output signal back to the amplifier's inverting input, thereby preserving the phase margin in the overall feedback loop. Capacitive drive can be increased by increasing the value of C_F. This in turn will slow down the pulse response.

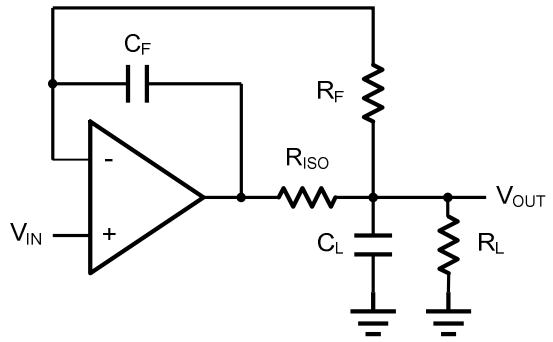

Figure 3. Indirectly Driving a Capacitive Load with DC Accuracy

Typical Application Circuits

Differential amplifier

The differential amplifier allows the subtraction of two input voltages or cancellation of a signal common the two inputs. It is useful as a computational amplifier in making a differential to single-end conversion or in rejecting a common mode signal. Figure 4. shown the differential amplifier using GS855X.

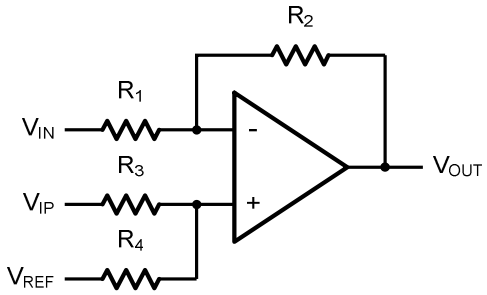

Figure 4. Differential Amplifier

$$V_{OUT}=\left(\frac{R_1+R_2}{R_3+R_4}\right)\frac{R_4}{R_1}V_{IN}-\frac{R2}{R1}V_{IP}+\left(\frac{R_1+R_2}{R_3+R_4}\right)\frac{R_3}{R_1}V_{REF}$$

If the resistor ratios are equal (i.e. R_1=R_3 and R_2=R_4), then

$$V_{OUT}=\frac{R_2}{R_1}(V_{IP}-V_{IN})+V_{REF}$$

Low Pass Active Filter

The low pass active filter is shown in Figure 5. The DC gain is defined by –R_2/R_1. The filter has a -20dB/decade roll-off after its corner frequency f_C=1/(2πR_3C_1).

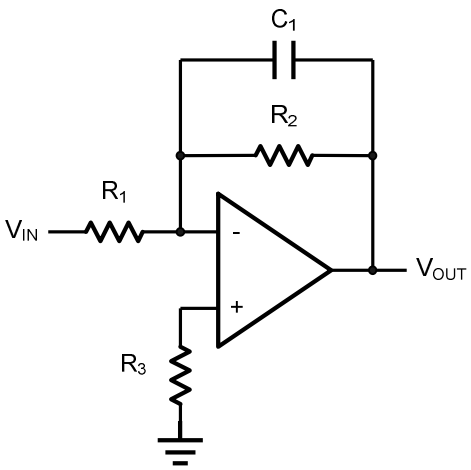

Figure 5. Low Pass Active Filter

Instrumentation Amplifier

The triple GS855X can be used to build a three-op-amp instrumentation amplifier as shown in Figure 6. The amplifier in Figure 6 is a high input impedance differential amplifier with gain of R_2/R_1. The two differential voltage followers assure the high input impedance of the amplifier.

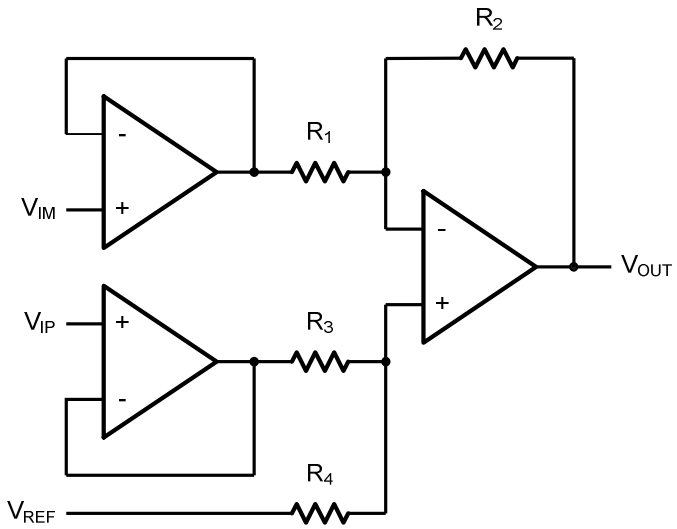

Figure 6. Instrument Amplifier

.

Package Information

SOP-8

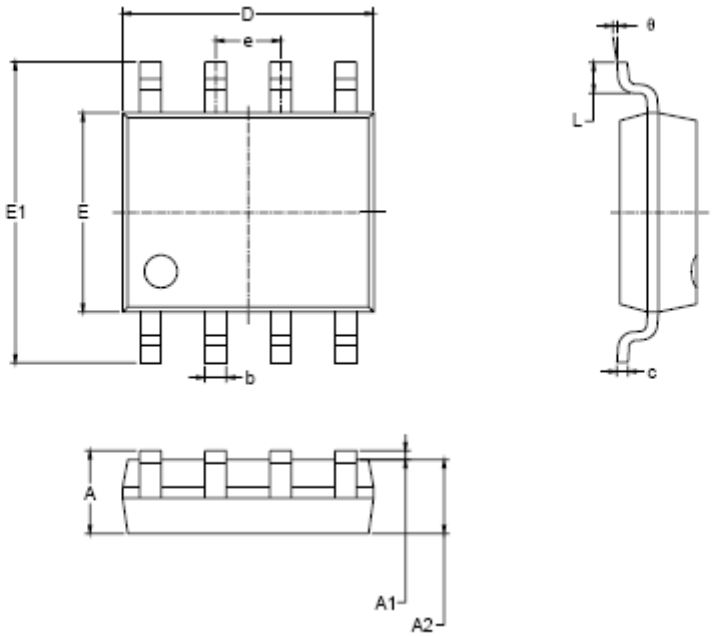

Symbol	Dimensions In Millimeters		Dimensions In Inches	
	MIN	MAX	MIN	MAX
A	1.350	1.750	0.053	0.069
A1	0.100	0.250	0.004	0.010
A2	1.350	1.550	0.053	0.061
b	0.330	0.510	0.013	0.020
c	0.170	0.250	0.006	0.010
D	4.700	5.100	0.185	0.200
E	3.800	4.000	0.150	0.157
E1	5.800	6.200	0.228	0.244
e	1.27 BSC		0.050 BSC	
L	0.400	1.270	0.016	0.050
θ	0°	8°	0°	8°

MSOP-8

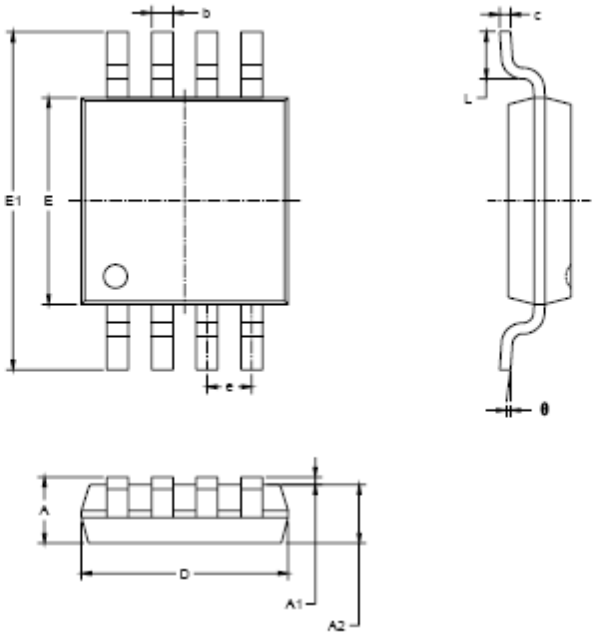

Symbol	Dimensions In Millimeters		Dimensions In Inches	
	MIN	MAX	MIN	MAX
A	0.820	1.100	0.032	0.043
A1	0.020	0.150	0.001	0.006
A2	0.750	0.950	0.030	0.037
b	0.250	0.380	0.010	0.015
c	0.090	0.230	0.004	0.009
D	2.900	3.100	0.114	0.122
E	2.900	3.100	0.114	0.122
E1	4.750	5.050	0.187	0.199
e	0.650 BSC		0.026 BSC	
L	0.400	0.800	0.016	0.031
θ	0°	6°	0°	6°

SOT23-5

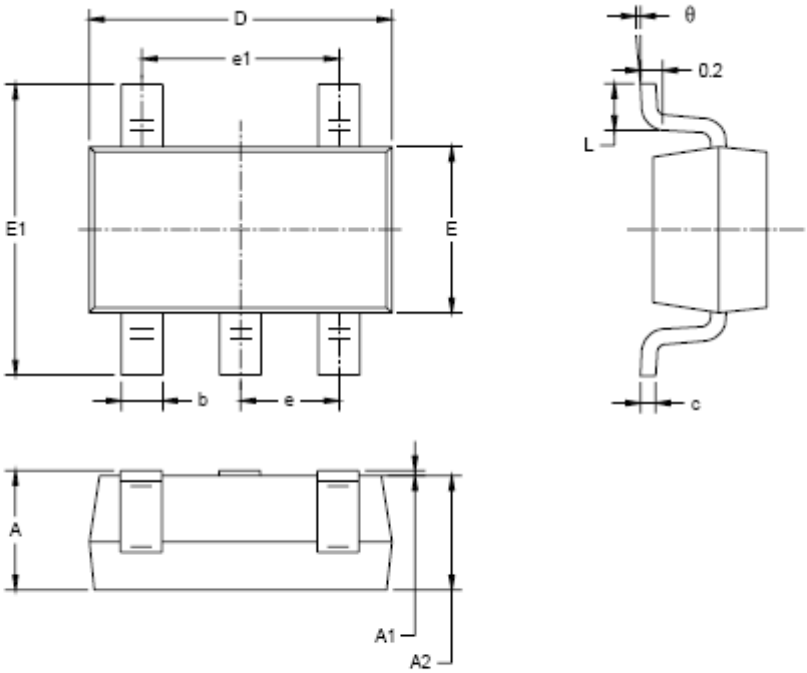

Symbol	Dimensions In Millimeters		Dimensions In Inches	
	MIN	MAX	MIN	MAX
A	1.050	1.250	0.041	0.049
A1	0.000	0.100	0.000	0.004
A2	1.050	1.150	0.041	0.045
b	0.300	0.500	0.012	0.020
c	0.100	0.200	0.004	0.008
D	2.820	3.020	0.111	0.119
E	1.500	1.700	0.059	0.067
E1	2.650	2.950	0.104	0.116
e	0.950 BSC		0.037 BSC	
e1	1.900 BSC		0.075 BSC	
L	0.300	0.600	0.012	0.024
θ	0°	8°	0°	8°

SOP-14

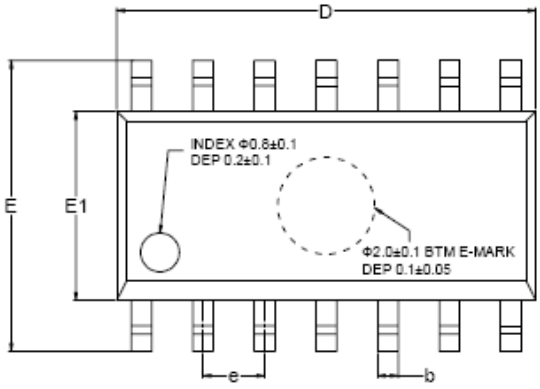

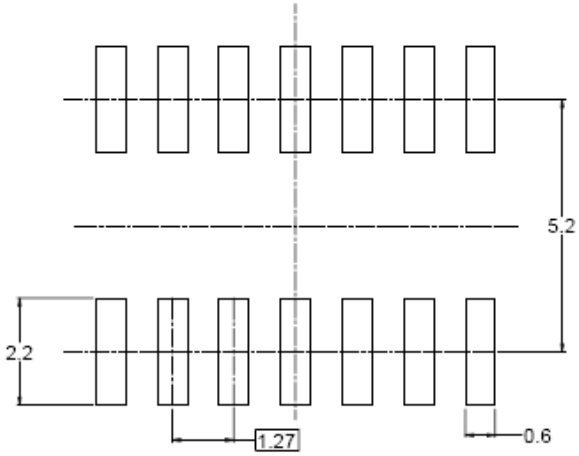

RECOMMENDED LAND PATTERN (Unit: mm)

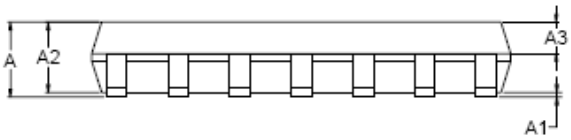

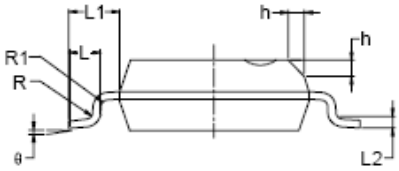

Symbol	Dimensions In Millimeters			Dimensions In Inches		
	MIN	MOD	MAX	MIN	MOD	MAX
A	1.35		1.75	0.053		0.069
A1	0.10		0.25	0.004		0.010
A2	1.25		1.65	0.049		0.065
A3	0.55		0.75	0.022		0.030
b	0.36		0.49	0.014		0.019
D	8.53		8.73	0.336		0.344
E	5.80		6.20	0.228		0.244
E1	3.80		4.00	0.150		0.157
e	1.27 BSC			0.050 BSC		
L	0.45		0.80	0.018		0.032
L1	1.04 REF			0.040 REF		
L2	0.25 BSC			0.01 BSC		
R	0.07			0.003		
R1	0.07			0.003		
h	0.30		0.50	0.012		0.020
θ	0°		8°	0°		8°

TSSOP-14

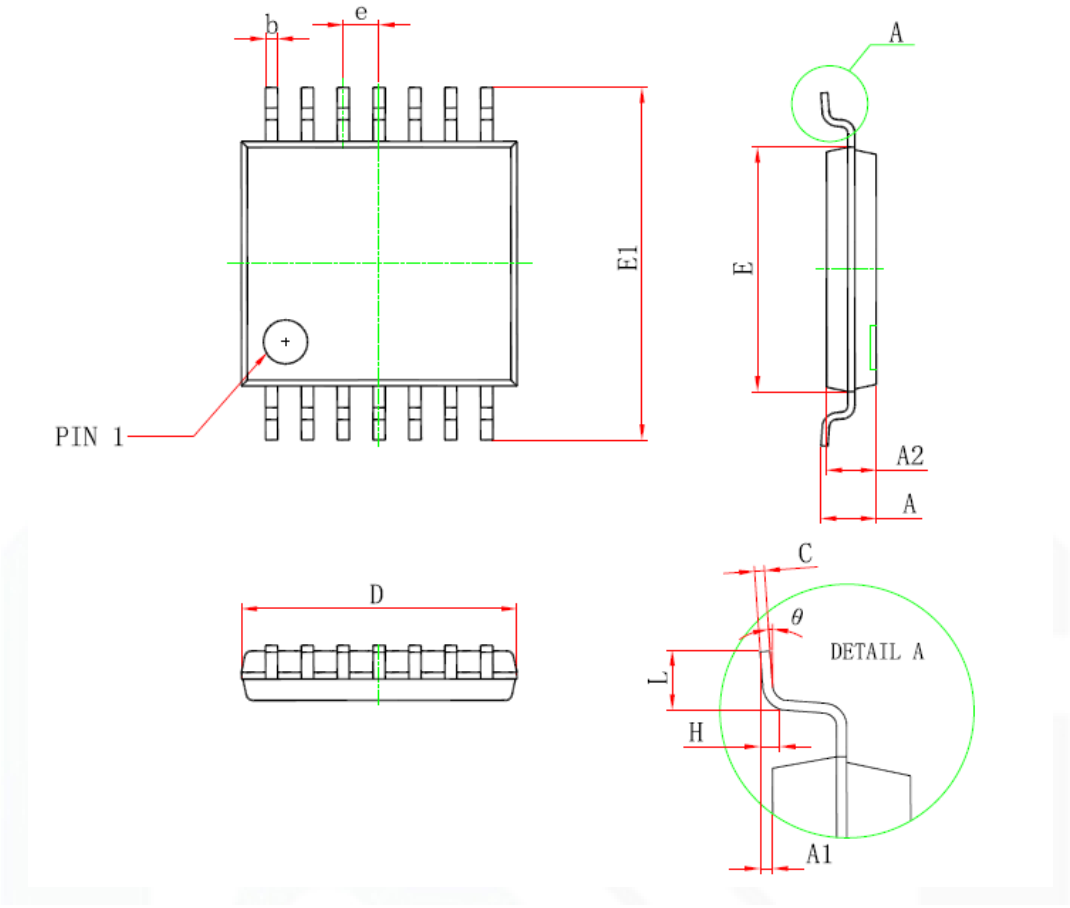

Symbol	Dimensions In Millimeters		Dimensions In Inches	
	Min	**Max**	**Min**	**Max**
D	4. 900	5. 100	0. 193	0. 201
E	4. 300	4. 500	0. 169	0. 177
b	0. 190	0. 300	0. 007	0. 012
c	0. 090	0. 200	0. 004	0. 008
E1	6. 250	6. 550	0. 246	0. 258
A		1. 200		0. 047
A2	0. 800	1. 000	0. 031	0. 039
A1	0. 050	0. 150	0. 002	0. 006
e	0. 65 (BSC)		0. 026 (BSC)	
L	0. 500	0. 700	0. 020	0. 028
H	0.25(TYP)		0.01(TYP)	
θ	1°	7°	1°	7°