RESEARCH ARTICLE OPEN ACCESS

Cloud Integrated IoT System for Soil Monitoring and Crop Management

Muthu T R*, Logesh M**, Mohamed Abbas Mandhri N**, Prasanna N R**, Madhesh S D O**

*(Associate Professor, Department of ECE, K.L.N. College of Engineering, Sivaganga, Tamil Nadu, India)

** (Department of ECE, K.L.N. College of Engineering, Sivaganga, Tamil Nadu, India)

----------**********----------

Abstract:

The integration of IoT and cloud computing is transforming traditional farming practices by enabling real-time monitoring, data-driven decision-making, and improved resource management. This paper presents a Web-Based IoT Solution for Precision Agriculture Using Firebase, designed to assist farmers in optimizing soil health and selecting suitable crops based on real-time environmental conditions. The system utilizes an ESP32 microcontroller interfaced with various sensors to measure soil moisture levels and NPK values, which are transmitted to Firebase for cloud storage and analysis. A web-based dashboard provides farmers with a centralized interface to access live soil data, weather conditions, and crop recommendations. By integrating OpenWeatherMap API, the system displays real-time temperature, humidity, and seasonal changes, helping farmers make informed decisions. Additionally, an analytical module processes NPK values along with seasonal data to suggest the most suitable crops for cultivation, promoting better soil utilization. The system also incorporates an ESP32-CAM module for remote crop monitoring, allowing users to capture and view live field images through the web interface. By providing real-time insights, automated crop recommendations, and remote field monitoring, this IoT-enabled solution enhances precision farming, sustainability, and agricultural productivity. The use of cloud computing ensures scalability and accessibility, making it a valuable tool for modern smart farming applications. This work highlights the potential of IoT in transforming conventional agriculture into an efficient, data-driven, and technology-driven ecosystem.

***Keywords* — IoT, Cloud Based Farming, Real-Time Soil Monitoring, Smart Crop Recommendation.**

----------**********----------

I. INTRODUCTION

Globally, food production depends heavily on agriculture, but conventional farming practices entail drawbacks like ineffective resource use and degraded soil. IoT and cloud computing provide a solution for precision agriculture in response to the need for increased yields. This project introduces a web - based IoT solution for precision agriculture using Firebase, enabling real-time soil monitoring, crop analysis, and weather tracking to help farmers make data-driven decisions through a remote cloud platform. The system utilizes an ESP32 microcontroller with a soil moisture sensor, TCS3200 color sensor for NPK detection, and ESP32-CAM for live crop monitoring. Data is transmitted to Firebase and displayed on a web dashboard for real time monitoring of soil conditions, weather, and crop recommendations. The OpenWeatherMap API provides live weather updates, enhancing farming decisions. By offering cloud-based access and intelligent insights, this system improves crop yield, reduces manual effort, and enhances efficiency in modern farming.

 ©IJSRED: All Rights are Reserved

II. RELATED WORK

The multitude of ways in which sensor-based and Internet of Things technologies improve precision agriculture has been studied by many researchers. Although conventional wireless sensors (WSNs) have been utilized extensively for soil monitoring, their restricted range and high power consumption are common drawbacks. Large-scale soil insights can be obtained using satellite-based remote sensing, but small farms cannot depend on its accuracy or real-time adaptation. Handheld soil testing devices offer accurate nutrient analysis but require manual operation and lack continuous data updates. Many existing smart farming systems focus on specific soil parameters rather than providing a comprehensive, multi-sensor approach. The proposed system bridges these gaps by integrating IoT-based real-time monitoring, cloud storage, and multi-sensor analysis. With soil nutrient assessment, weather tracking, and remote field monitoring, it offers scalability, accuracy, and accessibility for modern precision agriculture.

III. PROPOSED SYSTEM MODEL

The proposed system utilizes sensors to monitor soil parameters, an ESP32 microcontroller to process and transmit data, and a web-based dashboard for real-time visualization. Data is stored in Firebase, allowing continuous monitoring and remote access. In order to enhance agricultural output and resource efficiency, this system assists farmers with weather monitoring, soil health analysis, crop suggestion and decision-making.

A. System Architecture

The system follows a modular design, ensuring smooth data acquisition, processing, and visualization. It consists of three main components:

- Sensing Module – This contains an ESP32-CAM module for real-time crop monitoring and soil moisture and NPK sensors for soil analysis.
- Processing Unit – Sensor data is gathered, processed, and sent to Firebase via an ESP32 microcontroller to enable remote access and cloud storage.
- Data Visualization – A web-based dashboard facilitates better decision-making by offering real-time soil condition monitoring, weather updates, and crop suggestions.

The workflow of the system, including sensor integration, data exchange, and dashboard interfaces for effective precision farming, is illustrated in a block diagram.

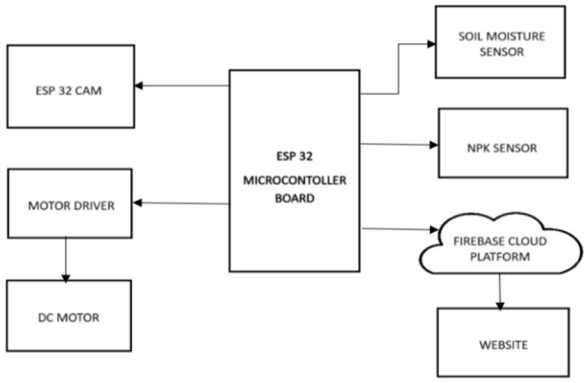

Fig. 1 Block Diagram

B. Hardware Components

The hardware configuration consists of a computing unit, sensors, and actuators for efficient and effective operation. Due to its low power consumption and Wi-Fi capabilities, which enable wireless communication and real-time data processing, the ESP32 microcontroller is the main component of the system. The system uses a TCS3200 sensor to estimate NPK (nitrogen, phosphorus, and potassium) values based on soil color analysis and a soil moisture sensor to assess water content to monitor soil health. Real-time photos are captured via an ESP32-CAM module for remote crop monitoring. An L298N motor driver is used to control a DC water pump for water management, guaranteeing accurate water distribution. A controlled power source provides

 ©IJSRED: All Rights are Reserved

stable voltage and current, ensuring the reliable operation of every component. The hardware implementation, including sensor and module integration, is shown in Fig -2.

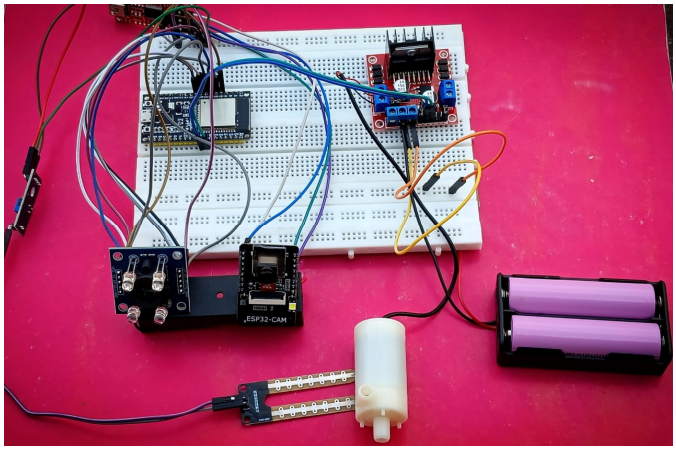

Fig. 2 Hardware implementation

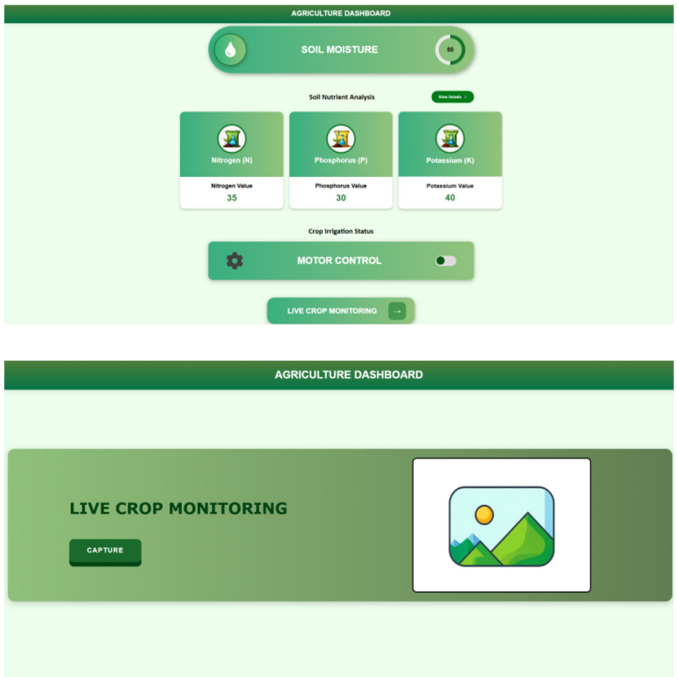

Fig. 3 Website Interface

C. Software Implementation

An ESP32 microcontroller is utilized in the system to provide real-time data collection, processing, and visualization. It gathers data from TCS3200 sensors and soil moisture sensors, analyzes NPK values, and sends them to Firebase using the HTTP and MQTT protocols. The ESP32-CAM module captures images for live crop monitoring. A web-based dashboard, built with HTML, CSS, and JavaScript, displays soil conditions, weather data, and crop recommendations. The system uses the OpenWeatherMap API for weather updates and Firestore to store crop details, analyzing NPK values and seasonal conditions to suggest suitable crops. The motor control logic reads the Firebase motor state, allowing remote pump activation. Data-driven decision-making is facilitated by cloud synchronization, ensuring distant access to agricultural insights. The website interface, displaying real-time sensor data, motor control, crop recommendations, and live monitoring, is shown in Fig -3.

IV. METHODOLOGY

Using IoT and cloud-based data analytics, the proposed solution facilitates remote decision-making, crop analysis, and real-time soil monitoring. The technique ensures effective integration of hardware and software components by following a defined procedure that includes data collection, processing, storage, and visualization.

The ESP32 microcontroller extracts Red (R), Green (G), and Blue (B) values from the soil sample by gathering soil moisture data and TCS3200 sensor readings. These values are then normalized to maintain consistency using the formula:

$$R_{norm} = \frac{R}{R+B+G}, \; G_{norm} = \frac{G}{R+B+G}, \; B_{norm} = \frac{B}{R+B+G}$$

The normalized RGB values are mapped to NPK percentages using an empirical formula:

$$N\ (\%) = (R_{norm} \times 100) - X$$

$$P\ (\%) = (G_{norm} \times 100) - Y$$

$$K\ (\%) = (B_{norm} \times 100) - Z$$

where X, Y, and Z are calibration constants determined based on soil sample testing.

 ©IJSRED: All Rights are Reserved

These estimated NPK values, along with soil moisture data, are transmitted wirelessly to Firebase Realtime Database using HTTP and MQTT protocols, ensuring secure cloud storage and real-time access. The ESP32-CAM module captures images upon request for live crop monitoring, which are displayed on the web dashboard.

A web-based dashboard, developed using HTML, CSS, and JavaScript, retrieves data from Firebase and displays soil parameters, weather updates, and crop recommendations in an interactive interface. The system integrates the OpenWeatherMap API to fetch real-time weather conditions, including temperature, humidity, and season, which are used alongside NPK values to determine suitable crop suggestions. A Firestore database stores essential crop details, including Crop Name, Suitable NPK Threshold Range, Optimal Season for Cultivation, and Planting and Harvesting Periods. By analyzing real-time NPK values and seasonal conditions, the system dynamically recommends suitable crops for cultivation, helping farmers optimize crop selection. The system also includes motor control functionality, allowing users to remotely activate or deactivate the water pump through the web dashboard. The ESP32 microcontroller reads the updated motor state from Firebase to regulate the L298N motor driver, ensuring effective water management according to soil moisture levels. Crop yield is increased, resource efficiency is improved, and real-time insights are provided by this IoT-driven precision agricultural system. For a variety of agricultural applications, its modular architecture offers scalability and adaptability.

V. RESULTS AND DISCUSSION

The accuracy, efficiency, and response time of the system were assessed in a controlled agricultural setting. Results showed that it provides precise soil moisture and NPK readings, with deviations of less than 5% compared to standard soil tests. The sensor-based NPK estimation proved reliable for real-time analysis, while Firebase integration ensured seamless data transmission. Utilizing the ESP32, the system demonstrated reduced power consumption, enhanced wireless connectivity, and increased real-time accuracy when compared to current alternatives. Data-driven decision-making was facilitated by the web-based dashboard's efficient visualization of crop recommendations and soil conditions. Its usefulness for precision agricultural applications is confirmed by important performance parameters such as sensor precision, data processing speed, and system stability.

TABLE 1
OPTIMAL CONDITIONS FOR CROP SUGGESTION

Crop	Groundnut	Sweet Potato
Nitrogen (N)	20 - 30	60 - 80
Phosphorous (P)	40 - 60	50 - 70
Potassium (K)	40 - 60	50 - 80
Season	Summer	Summer

The crop suggestion web interface, analyzing real-time NPK values and seasonal data for optimal crop recommendations, is shown in Fig -4.

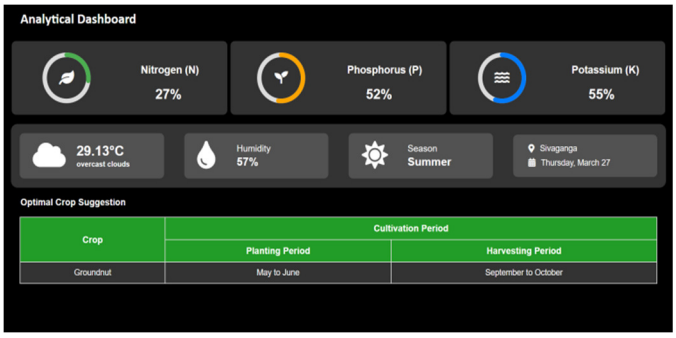

Fig. 4 Crop Suggestion Web Interface

VI. CHALLENGES AND LIMITATION

Considering its benefits, the system has certain issues that must be resolved. In remote locations with weak network signals, real-time data transfer proved unstable due to the limited range of wireless connectivity. Over time, sensor accuracy was affected by calibration drift, requiring regular adjustments to maintain precision. Another major issue that affected the system's long-term usage was power consumption. To boost performance and longevity, future iterations will include energy efficient design enhancements as well as cutting-edge connectivity options like LoRa, 5G, and AI Integration.

 ©IJSRED: All Rights are Reserved

VII. CONCLUSIONS AND FUTURE WORK

The proposed IoT-based soil monitoring system effectively integrates real-time soil analysis, wireless data transmission, and web-based visualization to support precision agriculture. Utilizing ESP32, multiple sensors, Firebase, and OpenWeatherMap, the system provides accurate soil health insights and crop recommendations, enabling better decision-making and resource management. Despite minor challenges, the system demonstrates high accuracy, efficiency, and scalability, making it a reliable and cost-effective solution for smart farming applications.

Future improvements will incorporate machine learning (ML) algorithms for predictive soil health analysis, automated decision-making, and AI-powered recommendations. The integration of autonomous navigation for field monitoring and enhanced energy management will further improve the system's scalability and impact in precision agriculture.

REFERENCES

[1] R. Madhumathi, T. Arumuganathan, and R. Shruthi, "Soil NPK and moisture analysis using wireless sensor networks," IEEE, 2020.

[2] P. Patidar and S. Joshi, "A cloud-based soil health digitalization and monitoring technique for optimum resource utilization in smart farming," in Proc. IEEE 2nd Int. Conf. Intell. Commun. Comput. Techn. (ICCT), 2019.

[3] V. Goswami, P. Singh, P. Dwivedi, and S. Chauhan, "Soil health monitoring system," Int. J. Res. Appl. Sci. Eng. Technol. (IJRASET), 2020.

[4] S. S. N. Shylaja and M. B. Veena, "Real-time monitoring of soil nutrient analysis using wireless sensor networks," in Proc. IEEE Int. Conf. Energy Commun. Data Anal. Soft Comput. (ICECDS), 2017.

[5] P. Sharma and D. V. Padole, "Design and implementation of soil analyzer using IoT," in Proc. IEEE Int. Conf. Innov. Inf. Embedded Commun. Syst. (ICIIECS), 2017.

 ©IJSRED: All Rights are Reserved