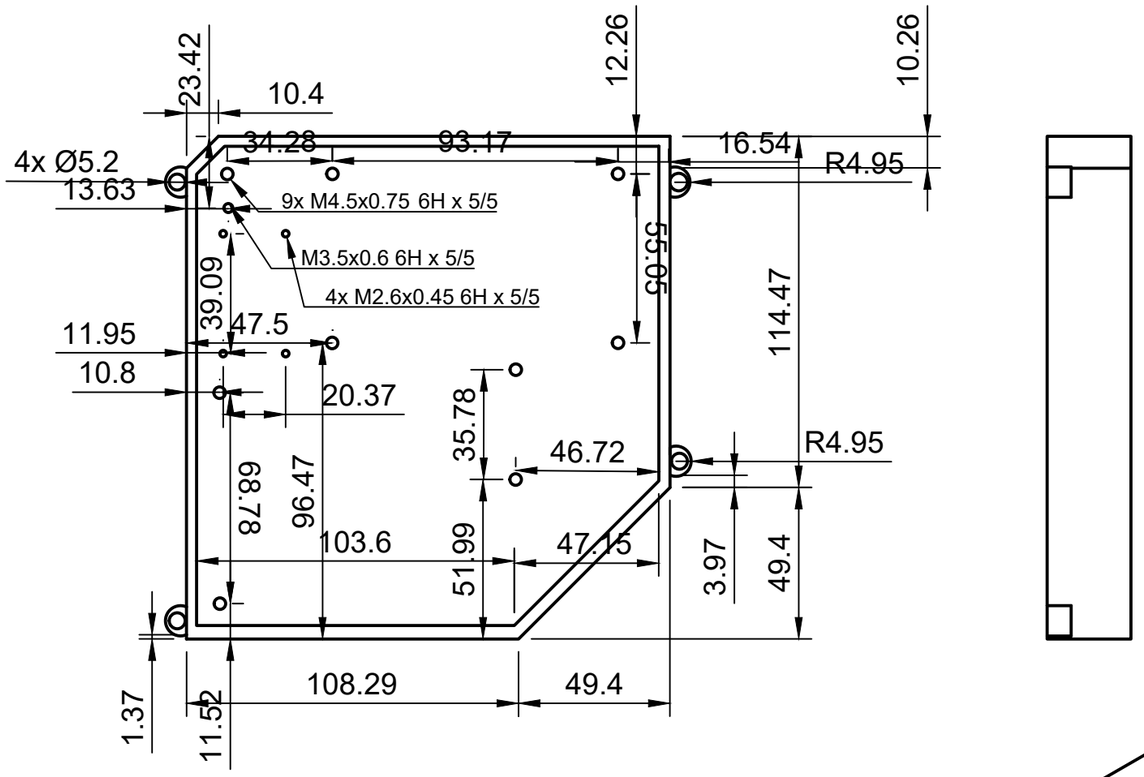

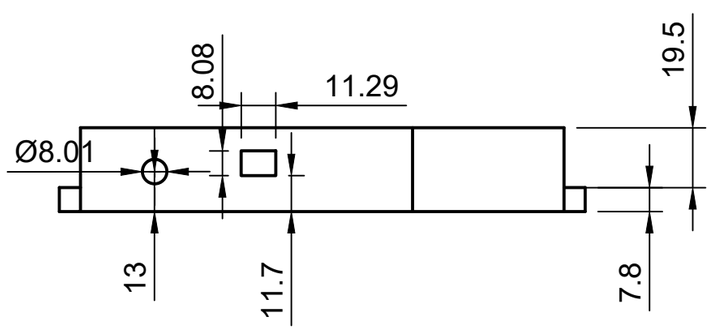

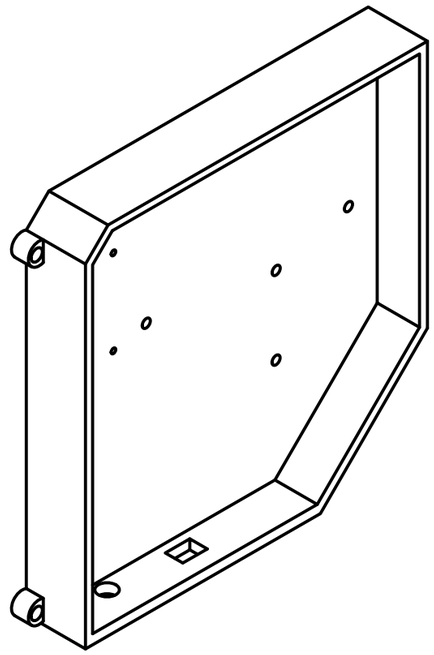

Dept.	Technical reference	Created by Damir Gazizullin 30/10/2022	Approved by
		Document type	Document status
		Title ECE198 Housing	DWG No.
			Rev. / Date of issue / Sheet 1/1