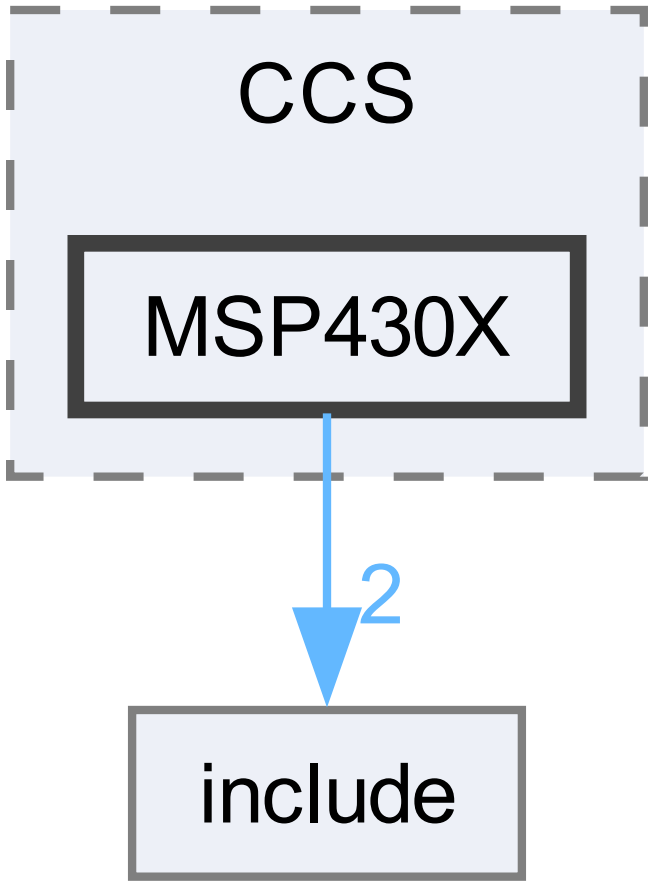
CCS
MSP430X
2
include