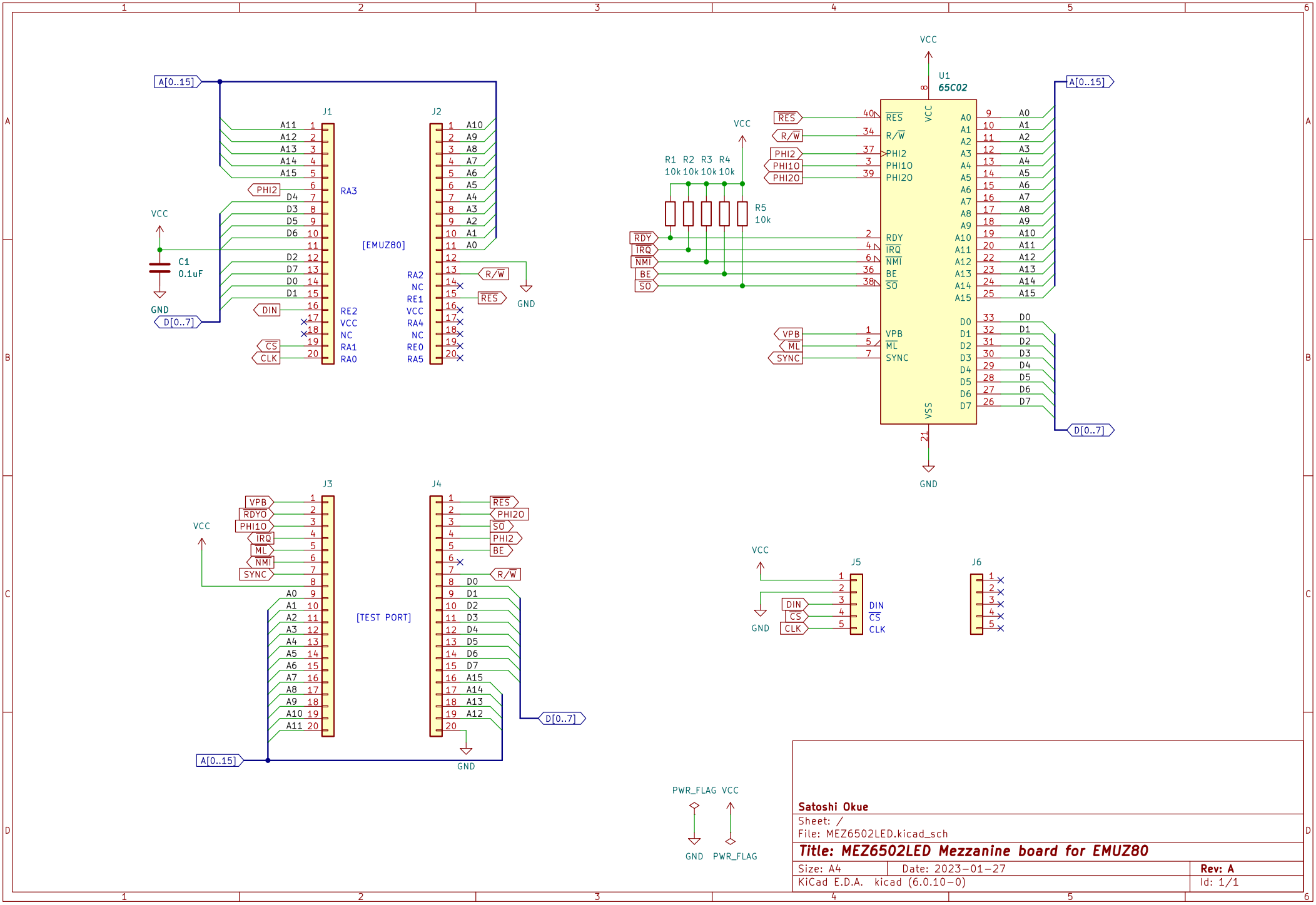

Satoshi Okue

Sheet: /

File: MEZ6502LED.kicad_sch

Title: MEZ6502LED Mezzanine board for EMUZ80

Size: A4	Date: 2023-01-27	Rev: A
KiCad E.D.A. kicad (6.0.10-0)		Id: 1/1