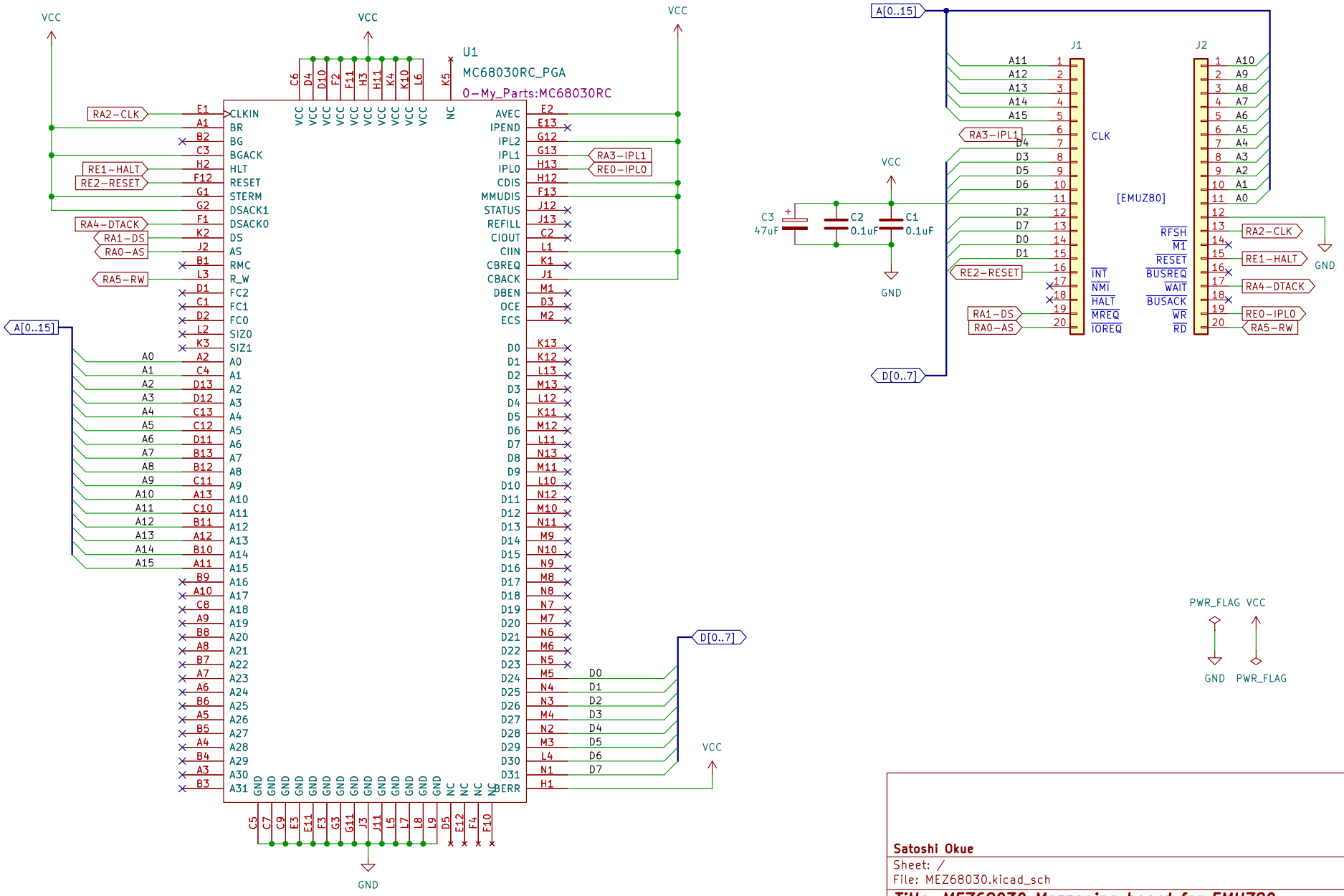

Satoshi Okue

Sheet: /

File: MEZ68030.kicad_sch

Title: MEZ68030 Mezzanine board for EMUZ80

Size: A4	Date: 2022-11-23	Rev: A1
KiCad E.D.A. kicad (6.0.9-0)		Id: 1/1