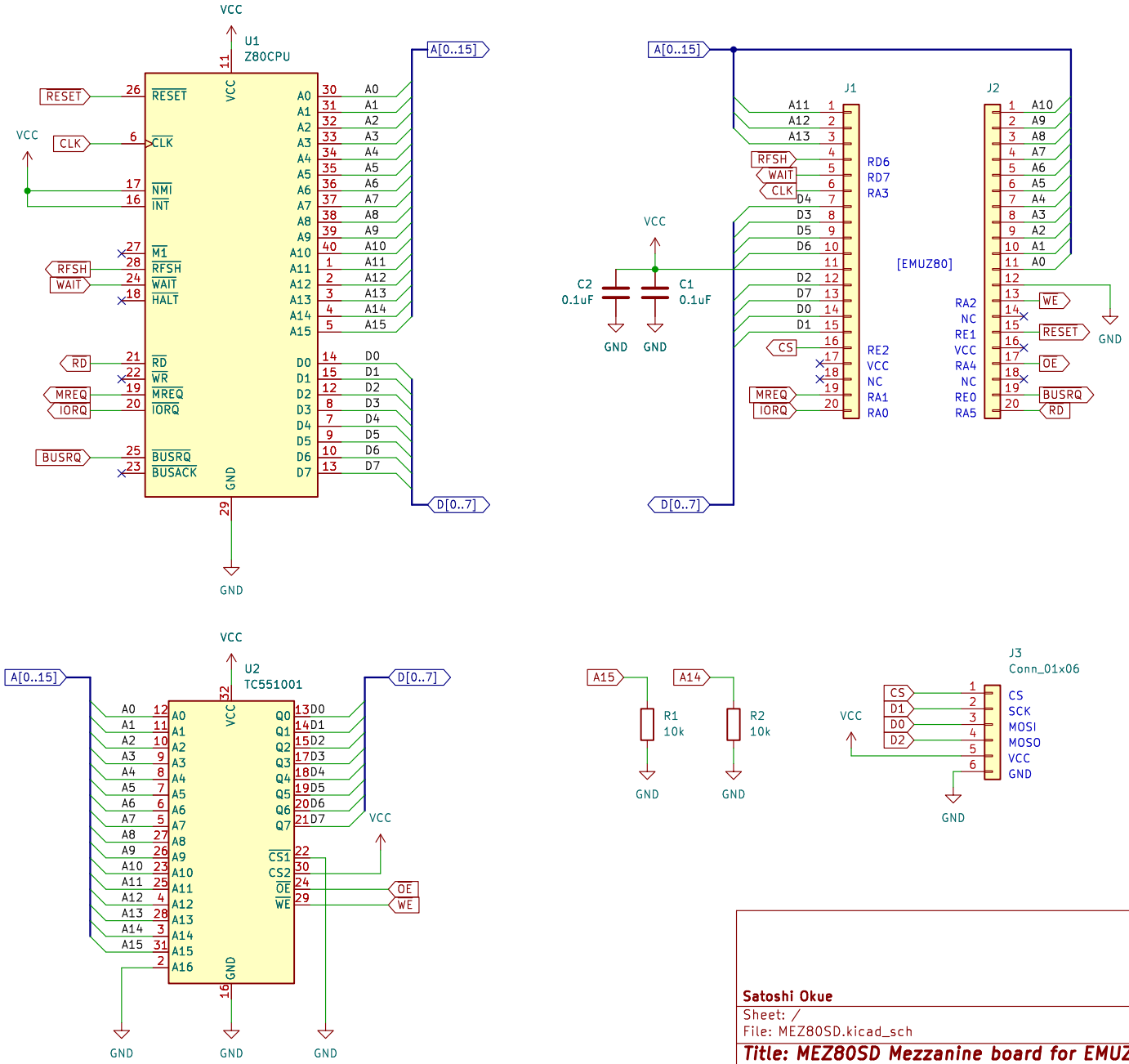

Satoshi Okue

Sheet: /

File: MEZ80SD.kicad_sch

Title: MEZ80SD Mezzanine board for EMUZ80

Size: A4	Date: 2023-02-21	**Rev: A**
KiCad E.D.A. kicad (7.0.0-0)		Id: 1/1