The picture can't be displayed.

Chapter 2: Intro to Relational Model

Database System Concepts, 6th Ed.

©Silberschatz, Korth and Sudarshan
See www.db-book.com for conditions on re-use

Example of a Relation

attributes
(or columns)

ID	*name*	*dept_name*	*salary*
10101	Srinivasan	Comp. Sci.	65000
12121	Wu	Finance	90000
15151	Mozart	Music	40000
22222	Einstein	Physics	95000
32343	El Said	History	60000
33456	Gold	Physics	87000
45565	Katz	Comp. Sci.	75000
58583	Califieri	History	62000
76543	Singh	Finance	80000
76766	Crick	Biology	72000
83821	Brandt	Comp. Sci.	92000
98345	Kim	Elec. Eng.	80000

tuples
(or rows)

Attribute Types

- The set of allowed values for each attribute is called the **domain** of the attribute
- Attribute values are (normally) required to be **atomic**; that is, indivisible
- The special value ***null*** is a member of every domain. Indicated that the value is “unknown”
- The null value causes complications in the definition of many operations

Relation Schema and Instance

- $A_1, A_2, \ldots, A_n$ are *attributes*

- $R = (A_1, A_2, \ldots, A_n)$ is a *relation schema*

  Example:

  instructor = (*ID*, *name*, *dept_name*, *salary*)

- Formally, given sets $D_1, D_2, \ldots. D_n$ a **relation *r*** is a subset of

  $D_1 \times D_2 \times \ldots \times D_n$

  Thus, a relation is a set of *n*-tuples $(a_1, a_2, \ldots, a_n)$ where each $a_i \in D_i$

- The current values (**relation instance**) of a relation are specified by a table

- An element ***t*** of ***r*** is a *tuple*, represented by a *row* in a table

Relations are Unordered

- Order of tuples is irrelevant (tuples may be stored in an arbitrary order)
- Example: *instructor* relation with unordered tuples

ID	*name*	*dept_name*	*salary*
22222	Einstein	Physics	95000
12121	Wu	Finance	90000
32343	El Said	History	60000
45565	Katz	Comp. Sci.	75000
98345	Kim	Elec. Eng.	80000
76766	Crick	Biology	72000
10101	Srinivasan	Comp. Sci.	65000
58583	Califieri	History	62000
83821	Brandt	Comp. Sci.	92000
15151	Mozart	Music	40000
33456	Gold	Physics	87000
76543	Singh	Finance	80000

Keys

- Let K $\subseteq$ R
- *K* is a **superkey** of *R* if values for *K* are sufficient to identify a unique tuple of each possible relation *r(R)*
  - Example: {*ID*} and {ID,name} are both superkeys of *instructor.*
- Superkey *K* is a **candidate key** if *K* is minimal

  Example: {*ID*} is a candidate key for *Instructor*
- One of the candidate keys is selected to be the **primary key**.
  - which one?
- **Foreign key** constraint: Value in one relation must appear in another
  - **Referencing** relation
  - **Referenced** relation
  - Example – *dept_name* in *instructor* is a foreign key from *instructor* referencing *department*

Schema Diagram for University Database

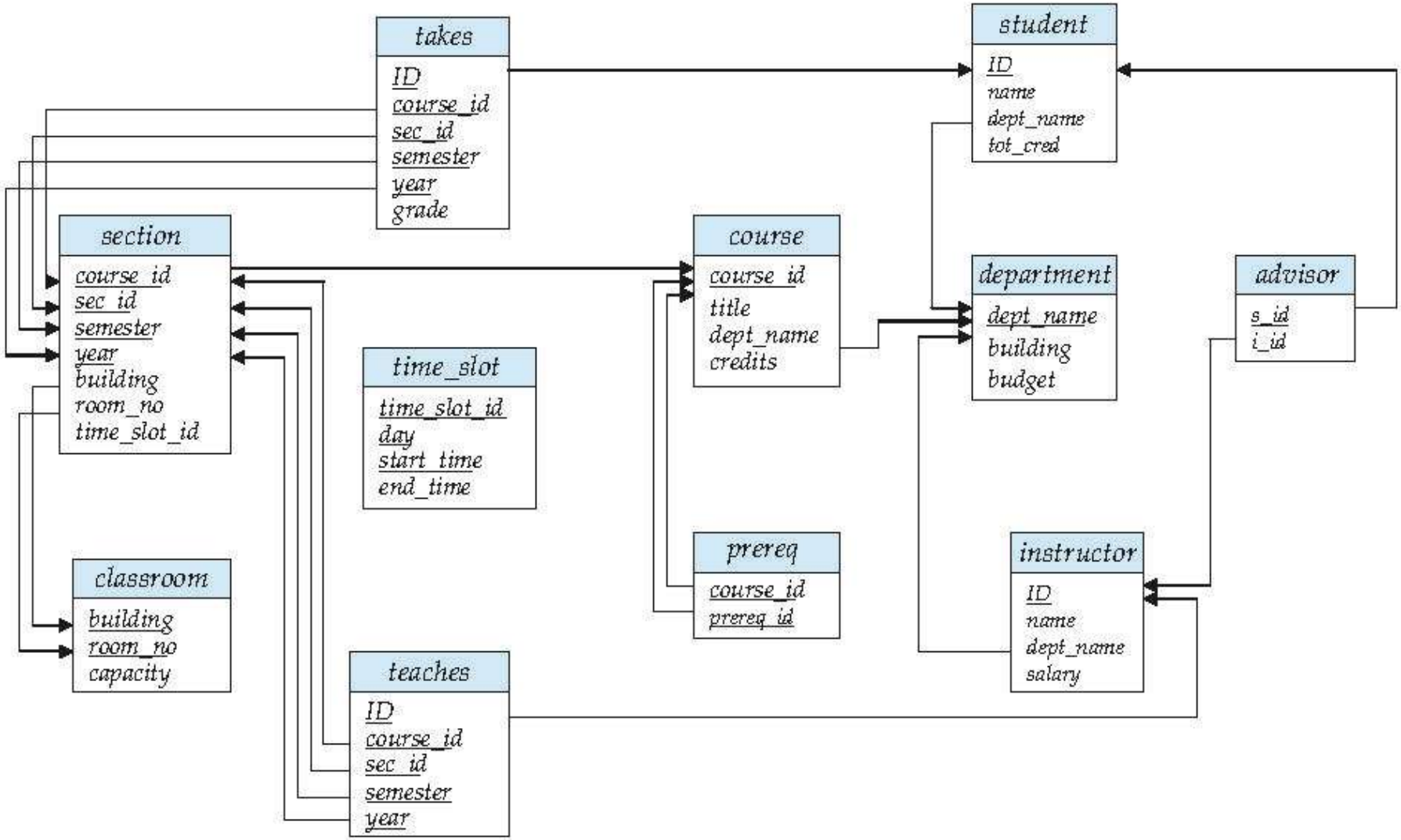

Relational Query Languages

- Procedural vs .non-procedural, or declarative
- “Pure” languages:
  - Relational algebra
  - Tuple relational calculus
  - Domain relational calculus
- The above 3 pure languages are equivalent in computing power
- We will concentrate in this chapter on relational algebra
  - Not turning-machine equivalent
  - consists of 6 basic operations

Select Operation – selection of rows (tuples)

- Relation r

A	B	C	D
α	α	1	7
α	β	5	7
β	β	12	3
β	β	23	10

- $\sigma_{A=B \wedge D > 5}(r)$

A	B	C	D
α	α	1	7
β	β	23	10

Project Operation – selection of columns (Attributes)

- Relation *r*:

A	B	C
α	10	1
α	20	1
β	30	1
β	40	2

- $\Pi_{A,C}(r)$

A	C
α	1
α	1
β	1
β	2

=

A	C
α	1
β	1
β	2

Union of two relations

- Relations *r, s:*

A	B
α	1
α	2
β	1

r

A	B
α	2
β	3

s

- r ∪ s:

A	B
α	1
α	2
β	1
β	3

Set difference of two relations

- Relations *r*, *s*:

A	B
α	1
α	2
β	1

r

A	B
α	2
β	3

s

- *r – s:*

A	B
α	1
β	1

Set intersection of two relations

- Relation *r, s*:

A	B
α	1
α	2
β	1

r

A	B
α	2
β	3

s

- $r \cap s$

A	B
α	2

Note: $r \cap s = r - (r - s)$

joining two relations -- Cartesian-product

- Relations *r, s*:

A	B
α	1
β	2

r

C	D	E
α	10	a
β	10	a
β	20	b
γ	10	b

s

- *r* x *s*:

A	B	C	D	E
α	1	α	10	a
α	1	β	10	a
α	1	β	20	b
α	1	γ	10	b
β	2	α	10	a
β	2	β	10	a
β	2	β	20	b
β	2	γ	10	b

Cartesian-product – naming issue

- Relations *r, s*:

A	B
α	1
β	2

r

B	D	E
α	10	a
β	10	a
β	20	b
γ	10	b

s

- *r* x *s*:

A	$r.B$	$s.B$	D	E
α	1	α	10	a
α	1	β	10	a
α	1	β	20	b
α	1	γ	10	b
β	2	α	10	a
β	2	β	10	a
β	2	β	20	b
β	2	γ	10	b

Renaming a Table

- Allows us to refer to a relation, (say E) by more than one name.

$$\rho_x(E)$$

returns the expression *E* under the name *X*

- Relations *r*

A	B
α	1
β	2

r

- $r \times \rho_s(r)$

$r.A$	$r.B$	$s.A$	$s.B$
α	1	α	1
α	1	β	2
β	2	α	1
β	2	β	2

Composition of Operations

- Can build expressions using multiple operations
- Example: $\sigma_{A=C}(r \times s)$

- $r \times s$

A	B	C	D	E
α	1	α	10	a
α	1	β	10	a
α	1	β	20	b
α	1	γ	10	b
β	2	α	10	a
β	2	β	10	a
β	2	β	20	b
β	2	γ	10	b

- $\sigma_{A=C}(r \times s)$

A	B	C	D	E
α	1	α	10	a
β	2	β	10	a
β	2	β	20	b

Joining two relations – Natural Join

- Let r and s be relations on schemas R and S respectively. Then, the "natural join" of relations R and S is a relation on schema $R \cup S$ obtained as follows:
  - Consider each pair of tuples t_r from r and t_s from s.
  - If t_r and t_s have the same value on each of the attributes in $R \cap S$, add a tuple t to the result, where
    - t has the same value as t_r on r
    - t has the same value as t_s on s

Natural Join Example

- Relations r, s:

A	B	C	D
α	1	α	a
β	2	γ	a
γ	4	β	b
α	1	γ	a
δ	2	β	b

r

B	D	E
1	a	α
3	a	β
1	a	γ
2	b	δ
3	b	ε

s

- Natural Join
  - r ⋈ s

A	B	C	D	E
α	1	α	a	α
α	1	α	a	γ
α	1	γ	a	α
α	1	γ	a	γ
δ	2	β	b	δ

$$\Pi_{A,\ r.B,\ C,\ r.D,\ E}(\sigma_{r.B = s.B \wedge r.D = s.D}(r \times s)))$$

Notes about Relational Languages

- Each Query input is a table (or set of tables)
- Each query output is a table.
- All data in the output table appears in one of the input tables
- Relational Algebra is not Turning complete
- Can we compute:
  - SUM
  - AVG
  - MAX
  - MIN

Summary of Relational Algebra Operators

Symbol (Name)	Example of Use
σ (Selection)	$\sigma_{salary >= 85000}(instructor)$
	Return rows of the input relation that satisfy the predicate.
Π (Projection)	$\Pi_{ID,\ salary}(instructor)$
	Output specified attributes from all rows of the input relation. Remove duplicate tuples from the output.
x (Cartesian Product)	*instructor* x *department*
	Output pairs of rows from the two input relations that have the same value on all attributes that have the same name.
∪ (Union)	$\Pi_{name}(instructor) \cup \Pi_{name}(student)$
	Output the union of tuples from the *two* input relations.
– (Set Difference)	$\Pi_{name}(instructor) - \Pi_{name}(student)$
	Output the set difference of tuples from the two input relations.
⋈ (Natural Join)	*instructor* ⋈ *department*
	Output pairs of rows from the two input relations that have the same value on all attributes that have the same name.

The picture can't be displayed.

End of Chapter 2

©Silberschatz, Korth and Sudarshan
See www.db-book.com for conditions on re-use