# Design Engineering Portfolio

For Imperial College London
Dyson School of Design Engineering

---

Oliver Bridge
04/06/2025

# Head Impact Project

**PROBLEM:** Repetitive, undetected head impacts in contact sports like rugby can lead to long-term brain injury, but existing monitoring tools are expensive, bulky, or inaccessible at amateur level.

- Designed a low-cost, wearable head impact sensor
- Used FMEA, anthropometric research, real-time motion data
- Developed and designed for rugby with real-world testing
- Optimised design for manufacture of 10,000 units with injection moulds

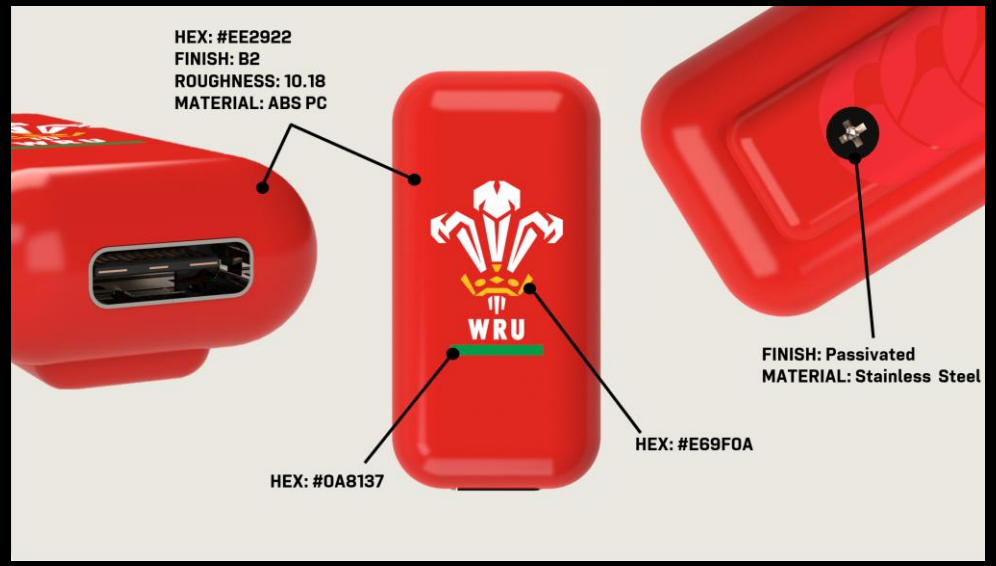


CMF board of the device showing material properties and finishes

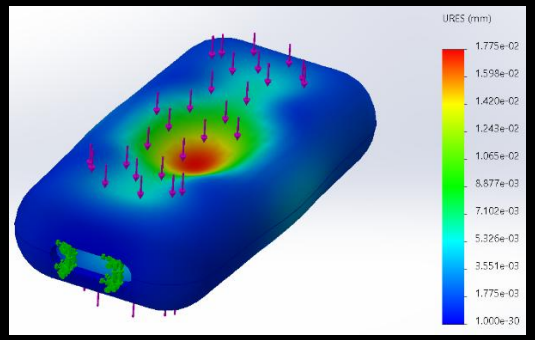


FEA simulation showing max displacement on casing with average impact force (1500N)

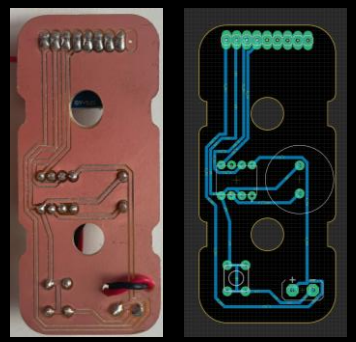

Prototype PCB with accelerometer, ATmega, actuator and battery

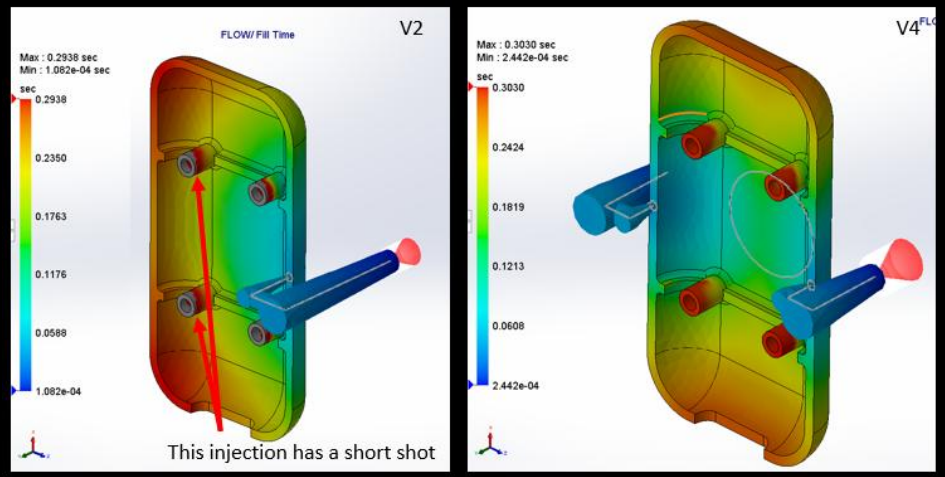


Injection mould simulation showing version iterations

# Air Quality Project

**PROBLEM:** Indoor air pollution is often invisible yet harmful, and current $CO_2$/pollutant monitors do not capture a full picture of pollutant exposure or enable actionable feedback.

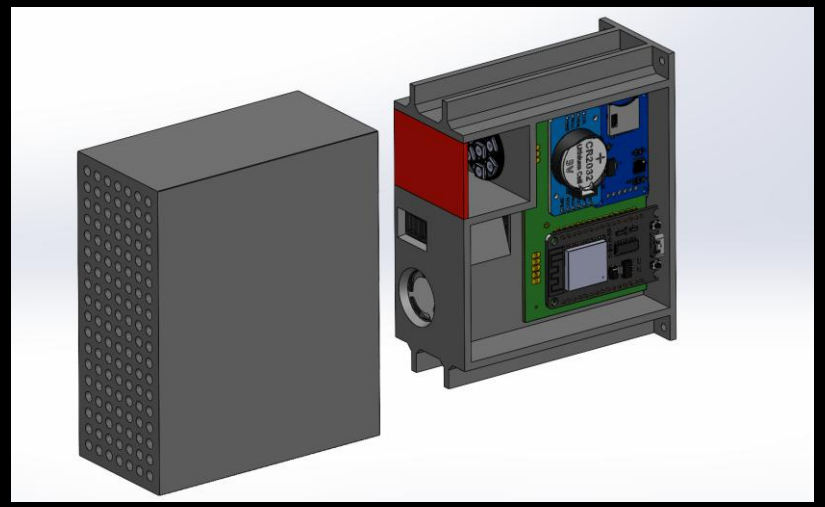

CAD for completed AQ monitor device

- Designed and built an indoor air quality sensor (PM1-10, VOC, NOx)
- Conducted research on detecting pollutants, interface methods and user-feedback
- Created multiple devices and delivered to real communities to guide health decisions

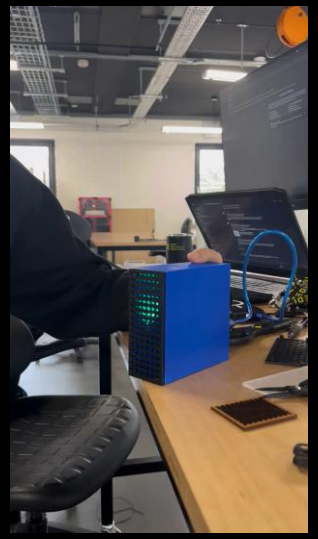

IOS interface

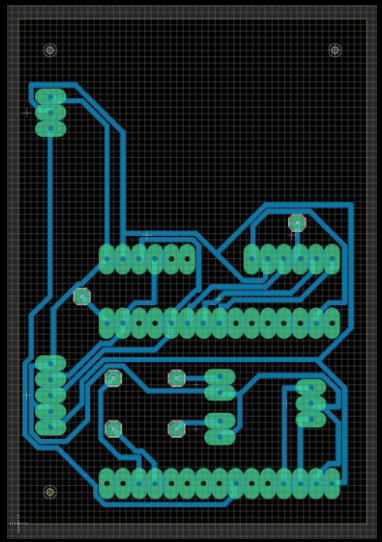

PCB layout design

```
// UK AQI Breakpoints for PM2.5 and PM10
float pm25BreakpointsLow[] = {0.0, 12.0, 24.0, 36.0, 42.0, 48.0, 54.0, 59.0, 65.0, 71.0};
float pm25BreakpointsHigh[] = {11.0, 23.0, 35.0, 41.0, 47.0, 53.0, 58.0, 64.0, 70.0, 500.0};
int pm25AQILow[] = {1, 2, 3, 4, 5, 6, 7, 8, 9};
int pm25AQIHigh[] = {2, 3, 4, 5, 6, 7, 8, 9, 10};
int aqiPm25 = calculateAQI(massConcentrationPm2p5, pm25BreakpointsLow, pm25BreakpointsHigh, pm25AQILow, pm25AQIHigh);

float pm10BreakpointsLow[] = {0, 17, 34, 51, 59, 67, 76, 84, 92, 101};
float pm10BreakpointsHigh[] = {16, 33, 50, 58, 66, 75, 83, 91, 100, 500};
int pm10AQILow[] = {1, 2, 3, 4, 5, 6, 7, 8, 9};
int pm10AQIHigh[] = {2, 3, 4, 5, 6, 7, 8, 9, 10};
int aqiPm10 = calculateAQI(massConcentrationPm10p0, pm10BreakpointsLow, pm10BreakpointsHigh, pm10AQILow, pm10AQIHigh);

// AQI for VOCs and NOx
int aqiVOC = (int)vocIndex * 10;
int aqiNOx = (int)noxIndex * 10;


// Determine the overall AQI
int overallAQI = max(max(aqiPm25, aqiPm10), max(aqiVOC, aqiNOx));

// Determine color
String aqiColor = getAQIColor(overallAQI);

// Set NeoPixel color based on AQI
setNeoPixelColor(overallAQI);
```

AQI function code for pollutant thresholds

The Living Lab

# Thermal Cycling Project

**PROBLEM:** Si solar cells in Low Earth Orbit experience extreme temperature cycles that degrade solder joints over time, but there is limited experimental data on how alternative materials perform under vacuum and thermal stress.

- Completed extensive literature review
- Designing and building experimental setup
- Outlined experiments to be performed, investigating different materials and configurations
- Lab based work, experience with SEM, electrical characterisation and other analysis methods
- Working with postgrads within a research group

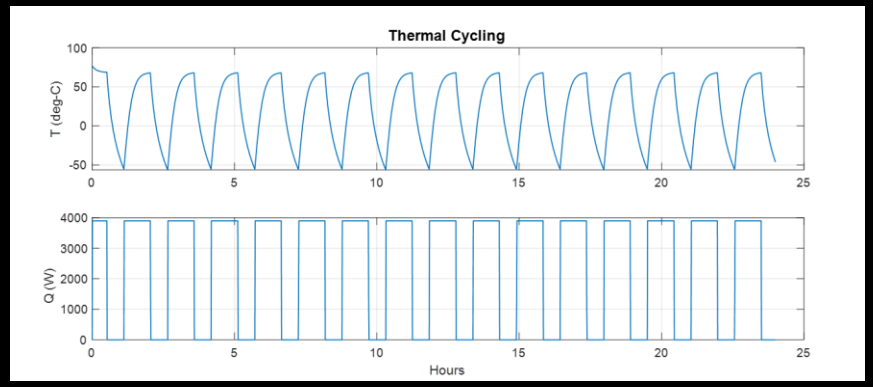


Experimental data cycle time and power consumption

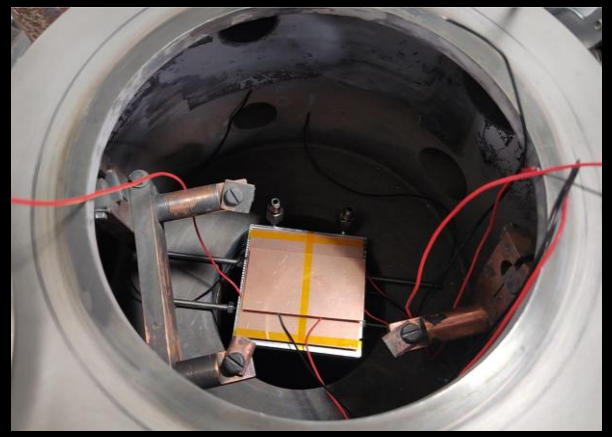

Peltier stack setup in the chamber

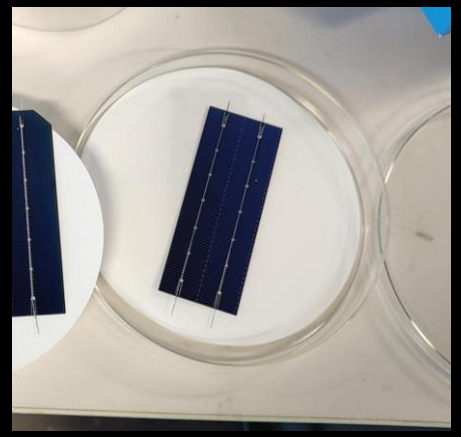

Si cell sample with In52Sn48

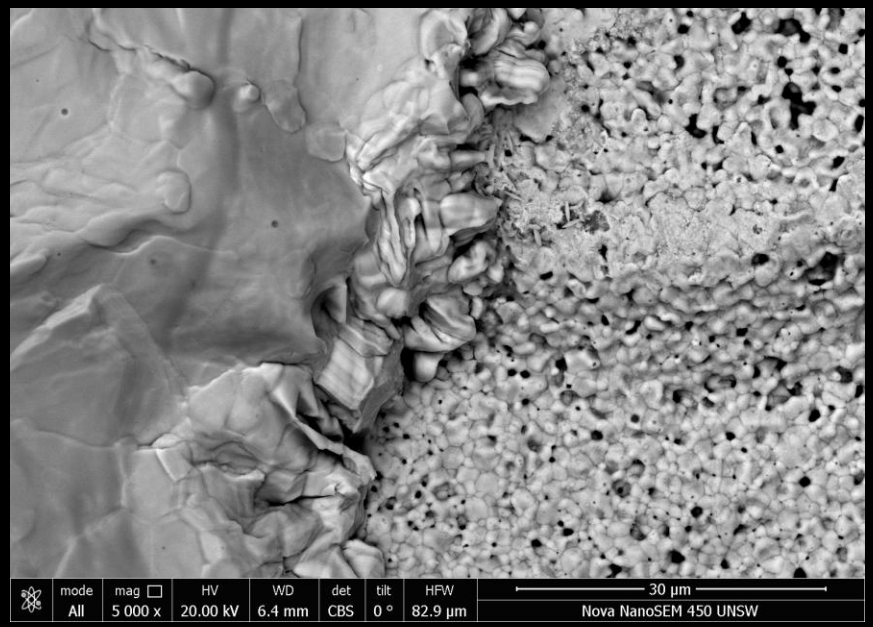


SEM showing the boundary between solder and metallisation layer