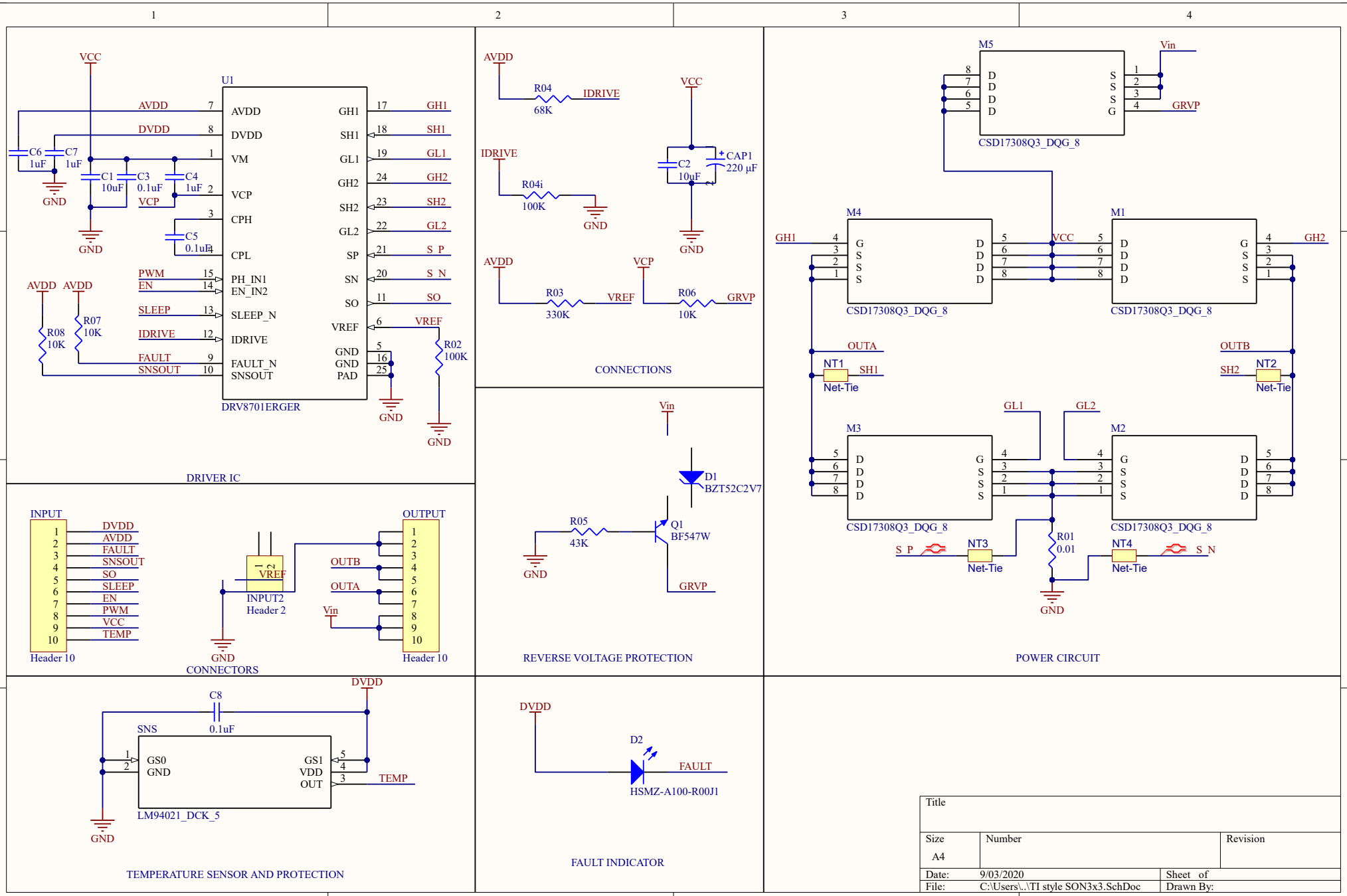
U1
DRV8701ERGER
AVDD
DVDD
VM
VCP
CPH
CPL
PH_IN1
EN_IN2
SLEEP_N
IDRIVE
FAULT_N
SNSOUT
GH1
SH1
GL1
GH2
SH2
GL2
SP
SN
SO
VREF
GND
GND
PAD
PWM
EN
SLEEP
IDRIVE
FAULT
SNSOUT
VCC
C6 1uF
C7 1uF
C1 10uF
C3 0.1uF
C4 1uF
C5 0.1uF
R08 10K
R07 10K
R02 100K
DRIVER IC
R04 68K
R04i 100K
R03 330K
R06 10K
C2 10uF
CAP1 220 µF
CONNECTIONS
INPUT
OUTPUT
Header 10
INPUT2
Header 2
CONNECTORS
D1 BZT52C2V7
R05 43K
Q1 BF547W
REVERSE VOLTAGE PROTECTION
M5
CSD17308Q3_DQG_8
M4
M1
M3
M2
Vin
GRVP
GH1
GH2
OUTA
OUTB
NT1
NT2
NT3
NT4
Net-Tie
GL1
GL2
R01 0.01
S_P
S_N
POWER CIRCUIT
C8 0.1uF
SNS
LM94021_DCK_5
TEMP
TEMPERATURE SENSOR AND PROTECTION
D2
HSMZ-A100-R00J1
FAULT
FAULT INDICATOR
Title
Size
A4
Number
Revision
Date: 9/03/2020
Sheet of
File: C:\Users\..\TI style SON3x3.SchDoc
Drawn By: