PROJECT REPORT:

ULTRASONIC RADAR SYSTEM.

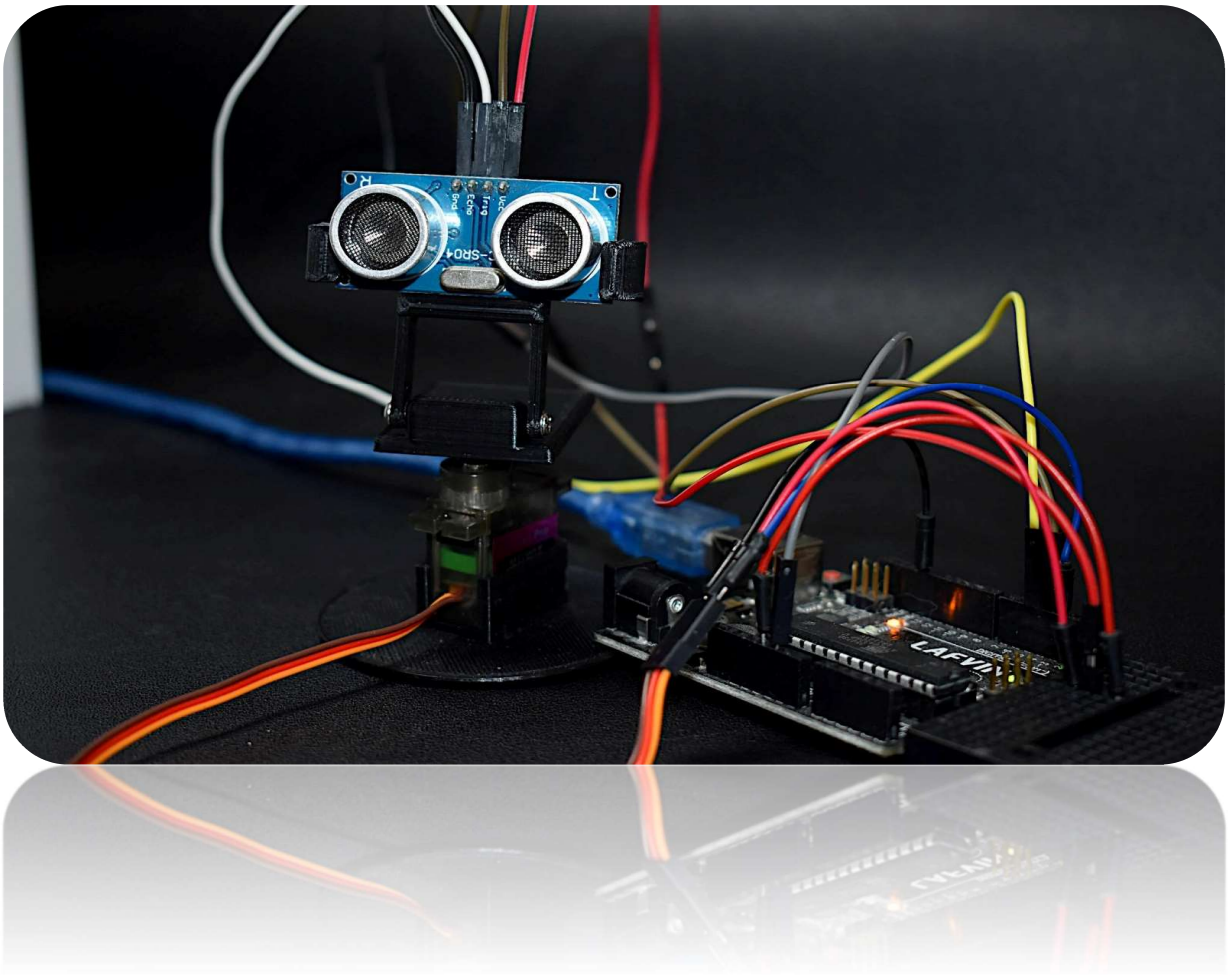

Introduction

Ultrasonic radar systems operate within a domain that focuses on the use of high-frequency sound waves—specifically ultrasonic waves that exceed the human hearing range (above 20,000 Hz)—to detect, measure, and interpret the physical environment. Every object interacts with the air around it and produces vibrations, many of which lie beyond audible frequencies. Ultrasonic sensors take advantage of these high-frequency waves, using transducers to convert sound energy into electrical signals and vice-versa. This makes them highly effective tools for identifying object distance, orientation, and movement without direct physical contact.

The importance of this project lies in the wide range of applications made possible by ultrasonic technology. Ultrasonic radar systems are used in object detection, collision avoidance, surveillance, automation, and navigation. They address limitations associated with traditional linear measurement methods by providing accurate, non-contact distance measurement—crucial in environments where precision and safety are essential. Because the speed of sound varies with environmental conditions such as temperature, understanding and analyzing the reflected ultrasonic waves allows the system to determine parameters like object distance, position, and speed.

In an ultrasonic radar setup, an ultrasonic sensor emits a burst of high-frequency sound waves that travel through the air, strike an object, and reflect back to the sensor. By measuring the time delay between transmission and reception, the system can calculate the object's distance and other characteristics. Processing software, along with microcontrollers such as Arduino, enables real-time analysis and visualization of these measurements. This principle is similar to SONAR (Sound Navigation and Ranging) technology and mirrors the natural echolocation abilities of bats.

Overall, the ultrasonic radar system offers a reliable, efficient, and versatile method for object detection and environmental mapping, making it an essential tool in robotics, automotive systems, industrial automation, and numerous other real-world applications.

Objective of the Project.

The primary objective of the Ultrasonic Radar System project is to **design, develop, and analyze a functional radar model using ultrasonic sensing technology** for accurate and real-time object detection. The goals are clear, measurable, and aligned with the system's practical applications. Specifically, the project aims to:

- **Design and construct an ultrasonic radar system** using an ultrasonic sensor, Arduino microcontroller, and supporting hardware components.

- **Achieve reliable detection of objects** within a specified range by emitting ultrasonic waves and analyzing the reflected signals.

- **Measure object distance accurately** by calculating the time interval between the transmitted and received ultrasonic pulses.

- **Provide real-time visualization** of object position and movement using processing software or a graphical interface.

- **Analyze the system's performance** under different environmental conditions (e.g., temperature variations) to understand their impact on sound wave propagation.

- **Ensure consistent and measurable accuracy** in detecting object distance, angle, and orientation within the desired operational range.

- **Implement a non-contact measurement method** that demonstrates the advantages of ultrasonic technology over traditional distance-measuring techniques.

- **Evaluate the effectiveness of the radar model** for potential applications such as collision avoidance, surveillance, and automated navigation systems.

These objectives define what the project intends to achieve in a measurable and practical manner, ensuring that the ultrasonic radar system is not only functional but also efficient and reliable for real-world use.

Scope of the Project

What the Project Will Cover

- **Core Functionality:**

  - **Object Detection:** The system is designed to detect the presence of physical objects in its path.
  - **Parameter Calculation:** It calculates specific parameters of the target, including **distance**, **position** (angle), and **speed**.
  - **Visual Mapping:** It involves creating a Graphical User Interface (GUI) to visually represent the detected objects, creating a "radar screen" simulation that maps the environment.

- **Hardware Implementation:**

  - The project covers the construction of a hardware unit using an **Arduino microcontroller** (ATMEGA328) as the processing brain.
  - It utilizes an **Ultrasonic Sensor (HC-SR04)** to transmit and receive sound waves for ranging.
  - It includes a **Servo Motor** to rotate the sensor between 0 and 180 degrees, providing a scanning mechanism similar to a radar dish.

- **Software Development:**

  - **Embedded Code:** Writing C/C++ code using the **Arduino IDE** to control the servo's rotation and process sensor data.
  - **GUI Programming:** Developing a display interface using the **Java programming language** (via Processing software) to visualize the sweep and object detection in real-time.

What the Project Will Cover

 Long-Range Detection: The system will not cover long-distance tracking. The effective range is strictly limited by the HC-SR04 sensor capabilities, which operates between **2 cm and 40 cm**. Objects outside this range will not be accurately detected or mapped.

- **Radio Frequency (RF) Technology:** Despite being called "RADAR" (Radio Detection and Ranging), this project does **not** use electromagnetic radio waves. It relies entirely on **Ultrasonic (Sound)** waves, effectively making it a SONAR (Sound Navigation and Ranging) system operating on radar principles.

- **High-Speed or Industrial Application:** The system is a low-power "kit" designed for minimizing power consumption and open-source accessibility. It is not intended for military-grade surveillance or high-speed intercept tracking, but rather for short-range applications like collision avoidance in robotics or intrusion detection.

- **360-Degree Coverage:** The scanning mechanism covers a semi-circular path (0 to 180 degrees) rather than a full 360-degree rotation

Methodology

DESIGN IMPLEMENTATION OF RADAR SYSTEM

The figure shown below shows the development life cycle of Radar project whichinvolves various step such as design of different components, their testing, their implementationand implementation of entire system and their testing. These steps can be enumerated intofollowing stages.

a) Hardware System Design.

b) Hardware Circuit Design.

c) Hardware System implementation.

d) Hardware unit testing

e) GUI System Design.

f) GUI System Implementation.

g) GUI unit testing.

h) Entire system integration.

i) Entire system testing

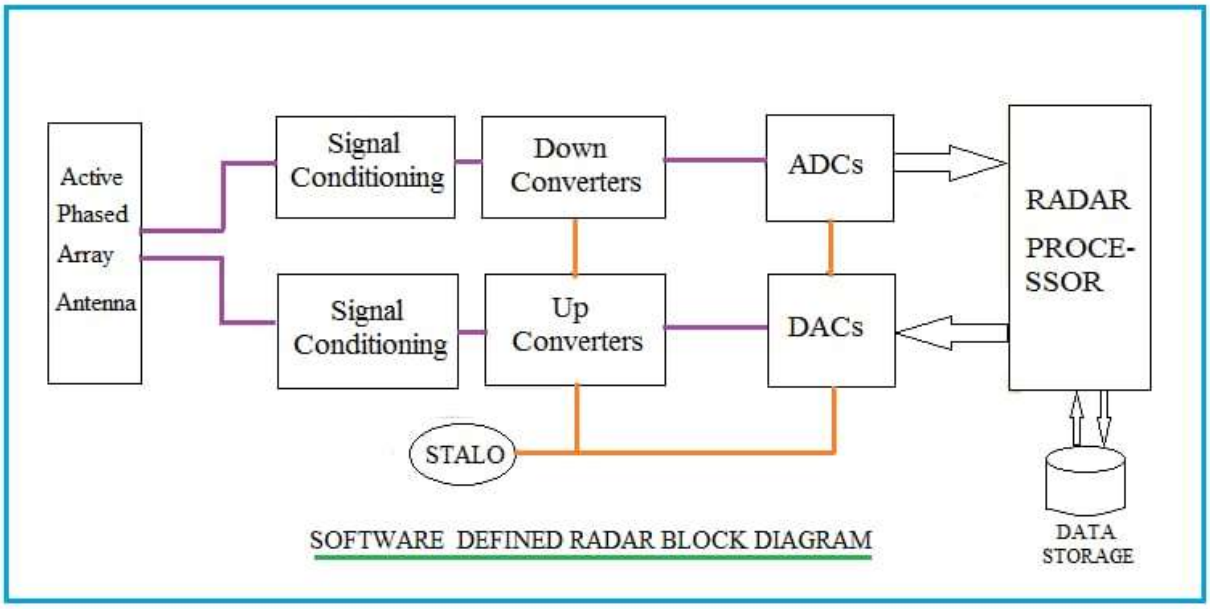

(A)Hardware system design for Arduino: hardware system consist of basically 3 componentsnamed as Arduino, servo-motor, and ultra-sonic sensor. Ultrasonic sensor is mounded upon aservo motor which helps it to move and provide it a turning

mechanism. Both ultrasonic sensorand servo motor are controlled and powered by Arduino. As given in above figure 2 we can seeboth ultrasonic sensor and servo motor is powered by Arduino.

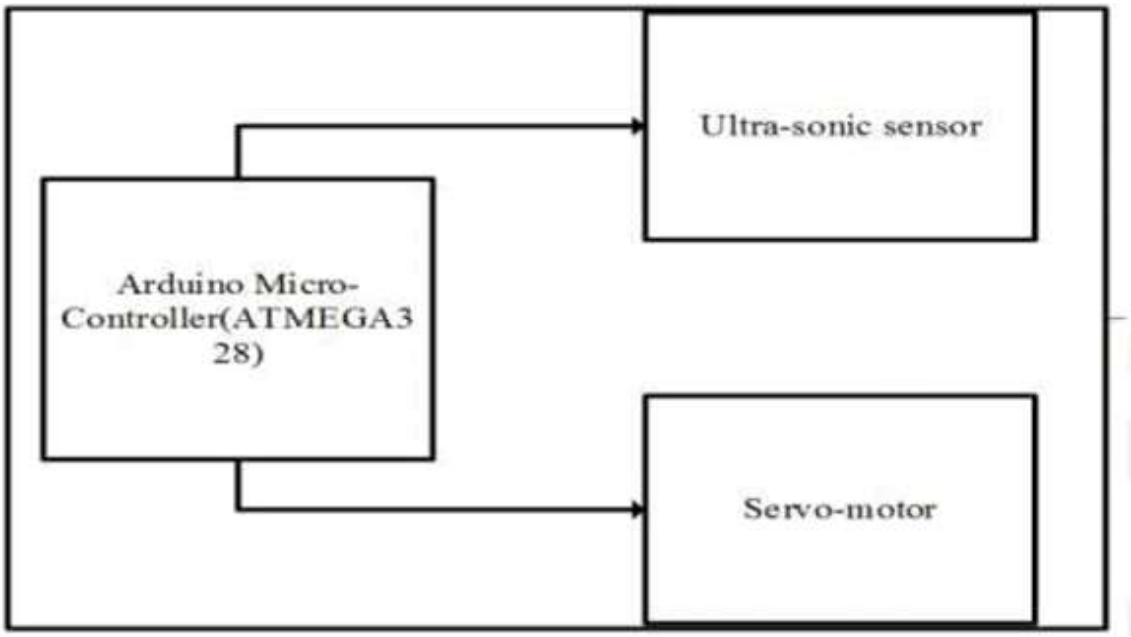

(B) System circuit design

Figure shows hardware system design which was designed using fritzing environment. Itshows the connection of different electronics components. In the figure triggering pins ofultrasonic sensor is connected to D8 pin of Arduino, control line of servo motor is connected toD6 pin of Arduino and D7 pin of Arduino is connected to echo pin. VCC pins of servo motor andultrasonic sensor is connected to 5V pin of Arduino while ground pin of Arduino is connected toground pin of both servo motor and ultra-sonic sensor.

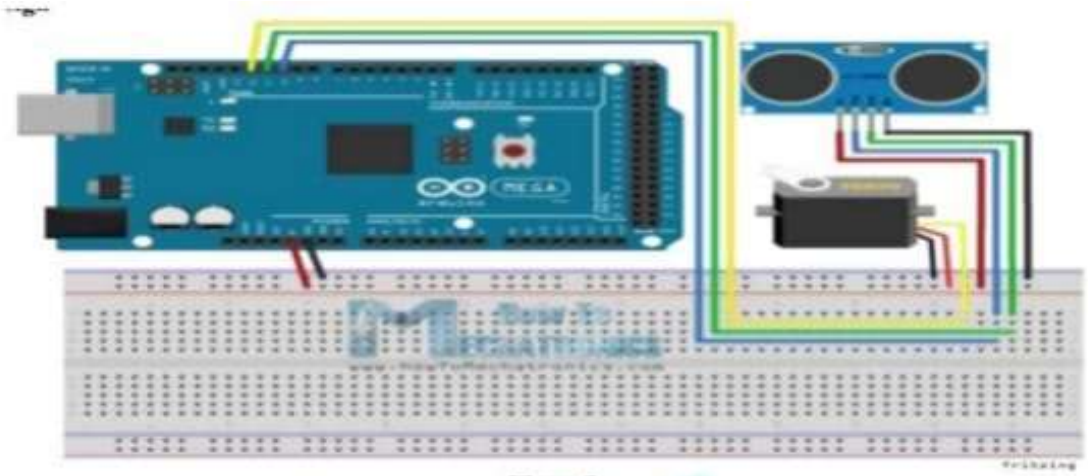

Figure3

(C) System circuit implementation on bread board –

Above figure shows complete implementation of hardware system. It can be seen thatultrasonic servomotor is placed upon a servo motor and it is placed above bread board. Arduinois placed in breadboard in other side of the breadboard and entire connection is made betweenthem. Arduino and servo motor are stick to breadboard to stop it from tripping over when servomotor moves. Arduino IDE was used to write code and upload it in Arduino. Arduino code readsposition of servo motor and calculate distance of nearest object in the path

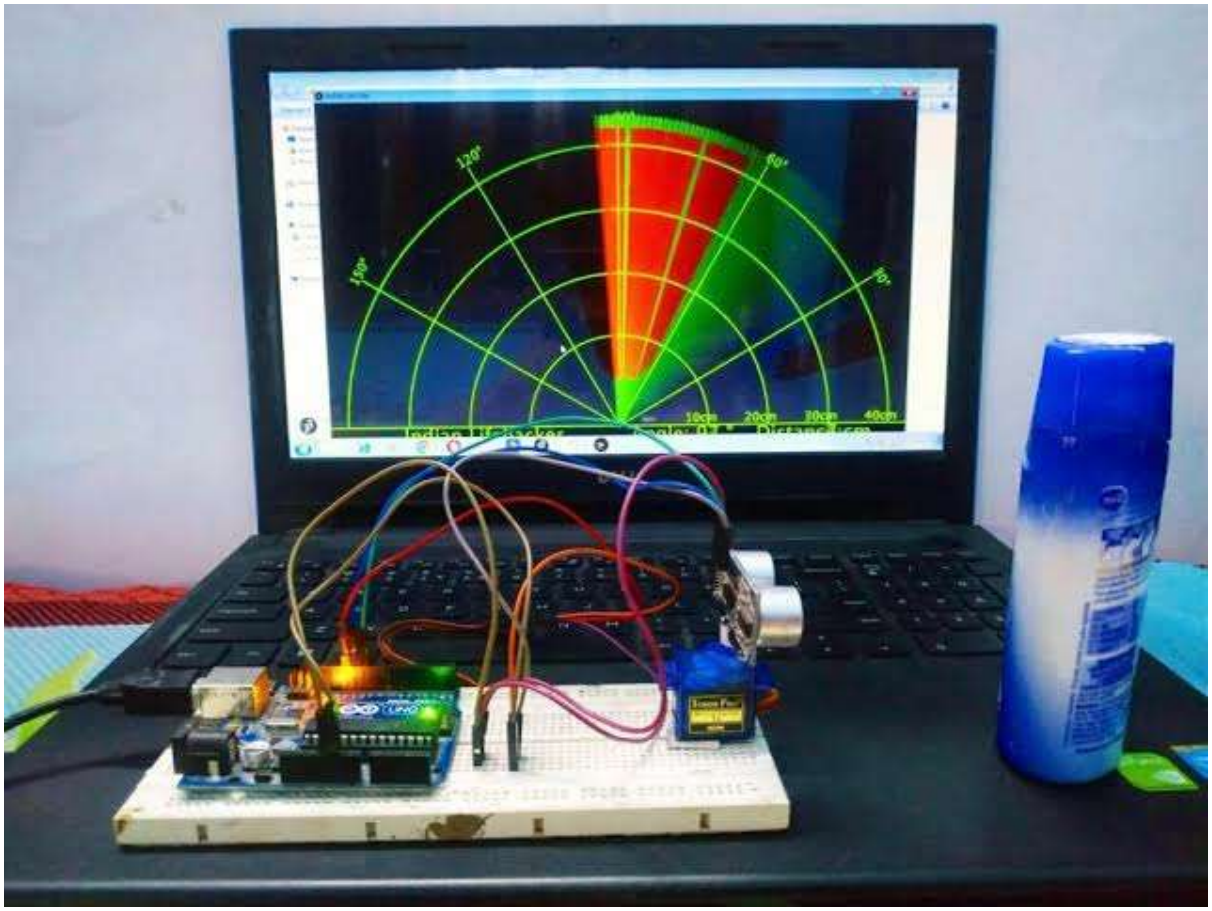

MODULES

Ultrasonic sensor:

An ultrasonic sensor works similar as of sonar. It can measure distance of object bysending sound waves. Sound waves are send at a specific frequency at a specific direction andlisten for sound wave to come back. time taken by sound wave to come back helps us todetermine distance of object

Servo motor:

A servomotor is a rotary actuator that allows for precise control of angular position,velocity and acceleration. It consists of a suitable motor coupled to a sensor for position feedback.It also requires a relatively sophisticated controller, often a dedicated module designedspecifically for use with servomotors. Servomotors are not a different class of motor, on the basisof fundamental operating principle, but uses servomechanism to achieve closed loop control witha generic open loop motor. Servomotors are used in applications such as robotics, CNC machinery or automated manufacturing.

Arduino

The Arduino is an open source electronics platform based on easy to use hardware andsoftware. The open source Arduino software makes it easy to write code and upload it to theboard. It runs on Windows, Mac OS X and Linux. The environment is written in java and basedon processing and other open source software. This software can be used with any Arduino board.The Arduino software IDE contains a text editor for writing code, a message area, a text console,a toolbar with buttons for common function. It connects to Arduino and Genuino hardware t+ouplоad programs and communicate with them. Program written using Arduino software arecalled sketches.

Bread board :

Breadboards are one of the most fundamental pieces when learning how to buildcircuits. In this tutorial, you will learn a little bit about what breadboards are, why they are calledbreadboards, and how to use one. Once you are done you should have a basic understanding ofhow breadboards work and be able to build a basic circuit on a breadboard.

Expected Outcomes

1. Functional Ultrasonic Radar Prototype

A fully working system that:

- emits ultrasonic pulses,
- detects nearby objects,
- measures their distance,
- and displays results in real time.

2. Real-Time Object Detection

The system will successfully:

- detect objects within its sensing range,
- identify their position (angle and distance),
- and update readings continuously.

3. Radar Visualization Interface

A radar-style display (GUI or LCD) showing:

- sweeping motion,
- detected obstacles plotted at correct angles/distances,
- real-time updates as the environment changes.

4. Distance Measurement Data

The project will produce:

- tabulated distance readings,
- graphs showing distance vs. angle,
- accuracy tests comparing actual vs. measured distance.

5. Performance Evaluation

Findings such as:

- maximum effective range of the sensor,
- accuracy and precision of measurements,
- response time,
- blind spots or limitations,
- effect of temperature/angle on readings.

6. Obstacle Mapping Capability

The system can create a basic environmental map by:

- sweeping across a defined angle (e.g., 0°–180°),
- storing distance readings,
- generating a 2D representation of object placement.

7. Demonstration of Collision-Avoidance Potential

The project will show how the system can be used in:

- robotic navigation,
- parking assistance,
- security monitoring,
- autonomous systems.

8. Documentation and Analysis

The project will produce:

- circuit diagrams, code, and hardware layout,
- test results and accuracy comparisons,
- limitations and improvement suggestions,
- a complete project report.

Applications of Ultrasonic Radar System

1. Obstacle Detection and Avoidance

Used in:

- Mobile robots
- Autonomous vehicles
- Drones
- Industrial AGVs (Automated Guided Vehicles)
  For detecting nearby obstacles and avoiding collisions.

---

2. Automotive Parking Assistance

Ultrasonic sensors are widely used for:

- Reverse parking systems
- Proximity alerts
- Blind-spot detection

They help vehicles sense nearby objects even in low visibility.

---

3. Security and Surveillance Systems

Ultrasonic radar can be used to:

- Detect motion or intrusion
- Monitor restricted areas
- Trigger alarms when an object enters a protected zone

---

4. Industrial Automation

Used in factories for:

- Object counting
- Level measurement in tanks

- Conveyor belt monitoring
- Robot arm safety zones

---

5. Distance Measurement Tools

Ultrasonic sensors are used in:

- Digital measuring tapes
- Industrial distance meters
- Height measurement systems

---

6. Navigation for Visually Impaired Assistance Devices

Used in smart canes or wearables to:

- Detect obstacles
- Provide vibration/audio warnings
- Help visually impaired individuals navigate safely

---

7. Environmental Mapping / Sonar Mapping

Helps build:

- 2D maps for robotics
- Room scanning tools
- Terrain analysis in indoor robotics

---

8. Smart Home and IoT Systems

Applications include:

- Automatic door opening
- Occupancy detection
- Smart lighting control
- Room presence monitoring

---

9. Liquid Level Detection

In industries like:

- Water treatment
- Petroleum storage
- Food processing
  Ultrasonic sensors measure the level of liquids in containers without contact.

---

10. Traffic Control and Monitoring

Used for:

- Vehicle detection at traffic junctions
- Counting vehicles
- Triggering signals based on presence

Tools, Technologies, and Resources Required

1. Software

- **Operating Systems:** Windows, Linux, or macOS (depending on project needs).
- **Development Environments / IDEs:**
  - Visual Studio Code
  - PyCharm
  - IntelliJ IDEA
  - Eclipse
- **Project Management Tools:**
  - Jira, Trello, Asana
- **Version Control:**
  - Git, GitHub, GitLab, Bitbucket
- **Database Management Systems:**
  - MySQL, PostgreSQL, MongoDB, SQLite
- **Data Analysis / Modeling Software:**
  - Python, R, MATLAB
- **Design & Prototyping Tools:**
  - Figma, Adobe XD, Sketch

---

2. Hardware

- **Computing Requirements:**
  - Standard laptop or workstation (8–16GB RAM minimum for development)
  - High-performance GPU-enabled systems for machine learning (e.g., NVIDIA CUDA-compatible GPUs)
- **Servers / Cloud Hardware (if applicable):**
  - Cloud instances (AWS EC2, Google Cloud Compute, Azure VMs)
  - On-premise servers for deployment or testing
- **Peripheral Devices:**
  - Input sensors, cameras, IoT devices, or other specialized hardware (depending on system requirements)

---

3. Frameworks

- **Web Development Frameworks:**
  - React, Angular, Vue.js (frontend)

    - Django, Flask, Node.js, Laravel (backend)
- **Machine Learning / AI Frameworks:**
    - TensorFlow, PyTorch, Keras, Scikit-learn
- **Mobile Development Frameworks:**
    - Flutter, React Native, SwiftUI, Kotlin
- **API Development:**
    - FastAPI, Express.js, Spring Boot

---

4. Datasets

- **Public Datasets (examples):**
    - Kaggle datasets
    - UCI Machine Learning Repository
    - Government open data portals
- **Custom / Proprietary Data:**
    - Organization-specific records
    - Collected sensor data
    - User-generated datasets
- **Data Storage:**
    - Cloud storage (AWS S3, Google Cloud Storage)
    - Local data lakes or warehouses

---

5. Libraries

- **Programming Libraries:**
    - NumPy, Pandas (data manipulation)
    - Matplotlib, Seaborn, Plotly (visualization)
    - OpenCV (computer vision)
    - NLTK, SpaCy (NLP)
- **Utility Libraries:**
    - Requests / Axios (API communication)
    - JWT / OAuth libraries (authentication)
    - Logging and debugging tools

---

6. Additional Resources

- **Documentation & Standards:**
    - API documentation

    - IEEE/ISO standards (if applicable)
- **Human Resources:**
    - Software engineers, data scientists, UI/UX designers
    - Project managers, QA testers
- **Training / Knowledge Resources:**
    - Online courses (Coursera, Udemy)
    - Reference books
    - Technical blogs & research papers

Project plane

1. Project Overview

The Ultrasonic Radar System uses an ultrasonic sensor to detect obstacles and display distance information in real time. The system includes hardware components (ultrasonic sensor, microcontroller), software (signal processing code, display interface), and a testing/validation phase.

2. Project Objectives

- Measure distance using ultrasonic waves
- Display distance in radar-style or numerical form
- Build a compact, low-cost radar prototype
- Ensure reliable detection within defined range (10–400 cm)
- Test and validate performance indoors/outdoors

---

3. Project Scope

In-Scope

- Hardware assembly (sensor + microcontroller + display)
- Firmware/software development
- Signal processing for distance calculation
- Real-time data display on LCD/PC radar UI
- Testing, documentation, and final demonstration

Out-of-Scope

- Long-range radar
- Multiple-sensor fusion
- Advanced mapping (SLAM)

---

4. Required Tools and Resources

Hardware

- Ultrasonic sensor (HC-SR04 or equivalent)
- Microcontroller (Arduino/STM32/PIC)
- Jumper wires, breadboard or PCB

- Servo motor (if rotating radar required)
- 5V power supply
- Laptop for programming

Software

- Arduino IDE / STM32CubeIDE
- Serial plotter or custom radar display software
- Fritzing/Proteus for circuit design

---

5. Work Breakdown Structure (WBS)

Phase 1: Planning

- Define requirements
- Identify components
- Prepare initial documentation

Phase 2: Hardware Setup

- Procure components
- Prepare wiring and power connections
- Build circuit (sensor + MCU + servo if needed)

Phase 3: Software Development

- Write ultrasonic distance measurement code
- Process echo time → distance conversion
- Develop radar UI / display code
- Test measurement accuracy

Phase 4: Integration

- Combine hardware + software
- Test radar sweep (if servo-based)
- Optimize response time and accuracy

Phase 5: Testing & Validation

- Test various distances
- Test in different environments
- Adjust parameters for noise, reflections

Phase 6: Documentation & Finalization

- Prepare report
- Create demo video
- Build final presentation

---

6. ESTIMATED SCHEDULE (8-Week Plan)

This schedule fits academic/mini-engineering projects.

Week	Activities
Week 1	Requirement analysis, component selection, literature review
Week 2	Component procurement, circuit design (simulation optional)
Week 3	Hardware assembly (sensor + MCU + display + servo)
Week 4	Basic coding for distance measurement, debugging
Week 5	Radar visualization (LCD/PC interface), servo scanning
Week 6	System integration, calibration, accuracy testing
Week 7	Field testing, performance tuning, error reduction
Week 8	Prepare documentation, final report, and project demo

---

7. Milestones

- **M1 (Week 2):** All components procured
- **M2 (Week 4):** Distance measurement code functional
- **M3 (Week 6):** Fully integrated radar prototype
- **M4 (Week 8):** Documentation + final presentation complete

---

8. Risk Management

Risk	Impact	Mitigation
Faulty sensor readings	Medium	Calibration and filtering
Component delays	Low	Order early, keep alternatives
Power fluctuations	High	Stable supply, capacitor smoothing
Coding errors	Medium	Incremental testing

Conclusion

The Ultrasonic Radar System successfully demonstrates how ultrasonic sensing technology can be used to detect obstacles and measure distance with accuracy and reliability. By integrating the ultrasonic sensor with a microcontroller and real-time display interface, the system provides an effective low-cost solution for short-range object detection. The project achieved its objectives by accurately converting echo signals into distance values, visualizing the results through a radar-style display, and validating performance in both controlled and real-world environments.

The system highlights the potential of ultrasonic technology in applications such as robotics, security systems, automation, and smart vehicles. Although the range and resolution are limited compared to advanced radar technologies, the project serves as a strong foundation for further improvements such as multi-sensor fusion, increased scanning speed, wireless communication, and enhanced signal processing.

Overall, the project demonstrates the practical implementation of sensor-based detection systems and provides valuable experience in hardware integration, embedded programming, and real-time data visualization.

Reference

Four successfully completing my project file, I have taken help from the following website links:-

- www.google.com
- www.youtube.com
- www.wikipedia.com
- https://www.chagpt.com
- https://gemini.google.com
- http://www.instructables.com/id/ ATMega328-using-Arduino-/
- http://www.radomes.org/museum/photos/equip/ANSPS17.jpg

Also used some other sources like:

- G. Bhor, P. Bhandari, R. Ghodekar and S. Deshmukh, "Mini Radar," International Journal of TechnicalResearch and Applications, pp. 68-71, 2016.
- T. P. Rajan, K. K. Jithin, K. S. Hareesh, C. A. Habeeburahman and. A. Jithin, "Range Detection basedon Ultrasonic Principle," International Journal of Advanced Research in Electrical, Electronics andInstrumentation Engineering, vol. 3, no. 2, pp. 7638-7643, 2014
- D. Sunehra, A. Bano, S. Yandrathi, "Remote monitoring and control of a mobile robot systemwith obstacle avoidancecapability", Proc. Int. Conf Adv. Comput. Commun. Inf.(ICACCI), pp. 1803-1809, Aug. 2015