Revision History

Rev.1.0	2022/09/07	Initial release
Rev.1.1	2022/12/17	Cheak from 问题记录.txt
Rev.1.2	2023/03/21	1、Change Discharge from MCU 17pin to MCU 33pin. 2、Add MCU 17pin for Temp_Sen.

wayzim 中科微至 中科微至智能制造科技江苏股份有限公司

DESIGNE:	CHECK:	APPROVE

Title History

Size A3

Document Number IO_CTRL_TOP_R10_0907

Rev R10

Date: Monday, July 24, 2023 Sheet 1 of 10

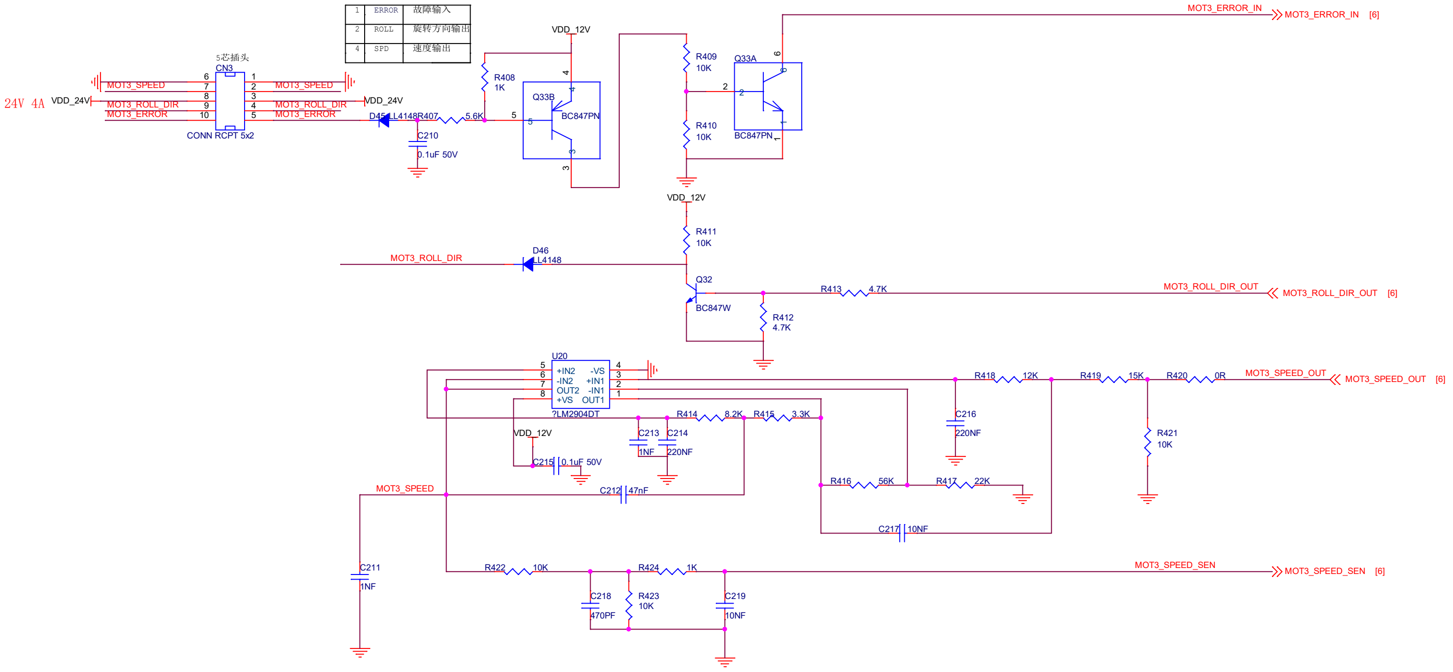
5芯插头
CN3
CONN RCPT 5x2
24V 4A
VDD_24V
MOT3_SPEED
MOT3_ROLL_DIR
MOT3_ERROR
6
7
8
9
10
1
2
3
4
5
VDD_24V
D45 LL4148
R407 5.6K
C210
0.1uF 50V
R408
1K
VDD_12V
Q33B
BC847PN
R409
10K
R410
10K
Q33A
BC847PN
MOT3_ERROR_IN
MOT3_ERROR_IN [6]
VDD_12V
R411
10K
MOT3_ROLL_DIR
D46
LL4148
Q32
BC847W
R413 4.7K
R412
4.7K
MOT3_ROLL_DIR_OUT
MOT3_ROLL_DIR_OUT [6]
U20
+IN2
-IN2
OUT2
+VS
-VS
+IN1
-IN1
OUT1
?LM2904DT
VDD_12V
C215 0.1uF 50V
C213
1NF
C214
220NF
R414 8.2K
R415 3.3K
R418 12K
R419 15K
R420 0R
MOT3_SPEED_OUT
MOT3_SPEED_OUT [6]
C216
220NF
R421
10K
R416 56K
R417 22K
C217 10NF
MOT3_SPEED
C212 47nF
C211
1NF
R422 10K
R424 1K
C218
470PF
R423
10K
C219
10NF
MOT3_SPEED_SEN
MOT3_SPEED_SEN [6]

1	ERROR	故障输入
2	ROLL	旋转方向输出
4	SPD	速度输出

wayzim 中科微至

中科微至智能制造科技江苏股份有限公司

DESIGNE:	CHECK:	APPROVE

Title MOT2_OUT

Size	Document Number	Rev
A3	IO_CTRL_TOP_R10_0907	R10

Date: Monday, July 24, 2023 Sheet 1 of 11

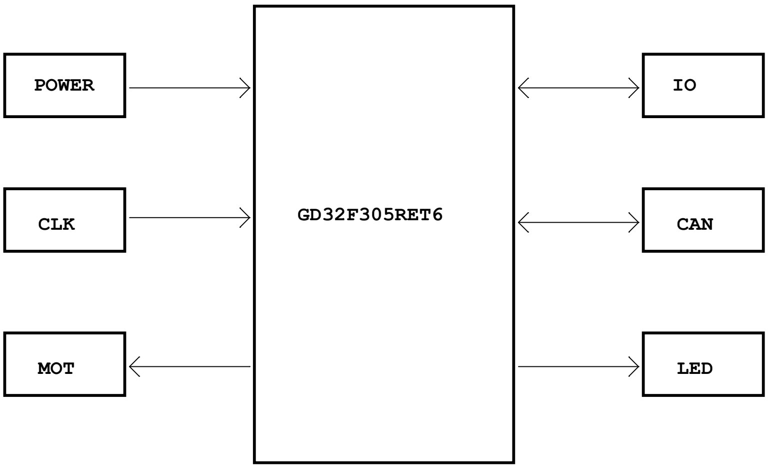
POWER
CLK
MOT
GD32F305RET6
IO
CAN
LED

wayzim 中科微至 中科微至智能制造科技江苏股份有限公司

DESIGNE:	CHECK:	APPROVE
Title	Function	
Size A3	Document Number IO_CTRL_TOP_R10_0907	Rev R10
Date: Monday, July 24, 2023	Sheet 2 of 10	

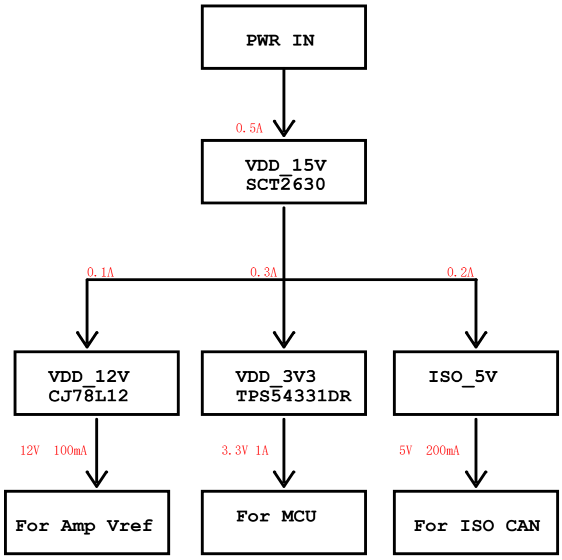
PWR IN
0.5A
VDD_15V
SCT2630
0.1A
0.3A
0.2A
VDD_12V
CJ78L12
VDD_3V3
TPS54331DR
ISO_5V
12V 100mA
3.3V 1A
5V 200mA
For Amp Vref
For MCU
For ISO CAN

中科微至智能制造科技江苏股份有限公司

DESIGNE:	CHECK:	APPROVE
Title	Power_Distribute	
Size A3	Document Number IO_CTRL_TOP_R10_0907	Rev R10
Date: Monday, July 24, 2023	Sheet 3 of 10	

No Power Sequence Requirement.

wayzim 中科微至

中科微至智能制造科技江苏股份有限公司

DESIGNE:	CHECK:	APPROVE

Title 0Power Sequence

Size	Document Number	Rev
A3	IO_CTRL_TOP_R10_0907	R10

Date: Monday, July 24, 2023 Sheet 4 of 10

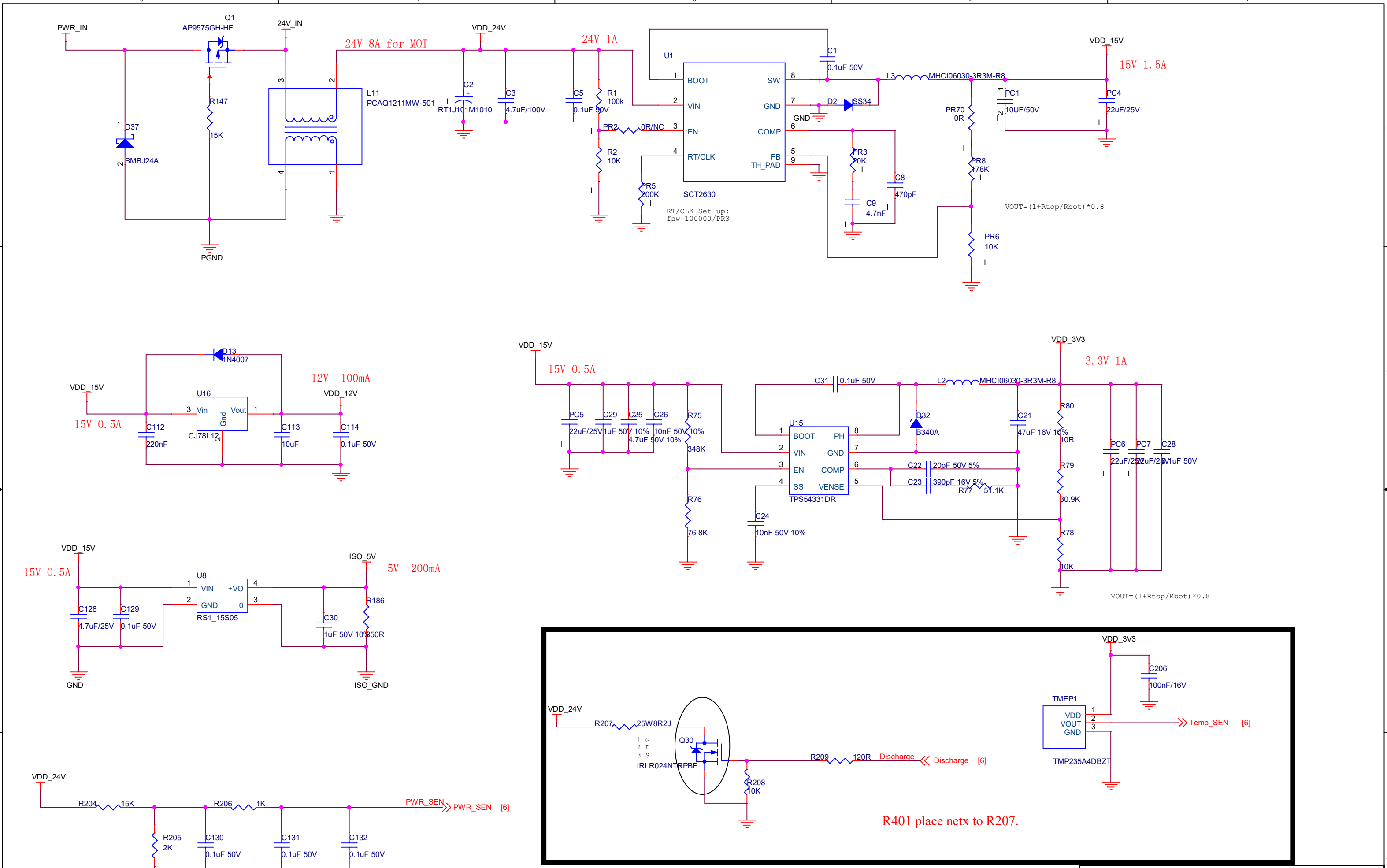
PWR_IN
Q1
AP9575GH-HF
24V_IN
R147
15K
D37
SMBJ24A
PGND
L11
PCAQ1211MW-501
24V 8A for MOT
VDD_24V
C2
RT1J101M1010
C3
4.7uF/100V
C5
0.1uF 50V
24V 1A
R1
100k
PR2
0R/NC
R2
10K
PR5
200K
U1
BOOT
VIN
EN
RT/CLK
SW
GND
COMP
FB
TH_PAD
SCT2630
RT/CLK Set-up:
fsw=100000/PR3
C1
0.1uF 50V
D2
SS34
GND
PR3
20K
C9
4.7nF
C8
470pF
L3
MHCI06030-3R3M-R8
VDD_15V
15V 1.5A
PR70
0R
PC1
10UF/50V
PC4
22uF/25V
PR8
178K
PR6
10K
VOUT=(1+Rtop/Rbot)*0.8
D13
1N4007
12V 100mA
VDD_12V
VDD_15V
15V 0.5A
U16
Vin
Vout
Gnd
CJ78L12
C112
220nF
C113
10uF
C114
0.1uF 50V
VDD_15V
15V 0.5A
PC5
22uF/25V
C29
1uF 50V 10%
C25
4.7uF 50V 10%
C26
10nF 50V 10%
R75
348K
R76
76.8K
U15
BOOT
VIN
EN
SS
PH
GND
COMP
VENSE
TPS54331DR
C24
10nF 50V 10%
C31
0.1uF 50V
D32
B340A
L2
MHCI06030-3R3M-R8
VDD_3V3
3.3V 1A
C21
47uF 16V 10%
C22
20pF 50V 5%
C23
390pF 16V 5%
R77
51.1K
R80
10R
R79
30.9K
R78
10K
PC6
22uF/25V
PC7
22uF/25V
C28
0.1uF 50V
VOUT=(1+Rtop/Rbot)*0.8
VDD_15V
15V 0.5A
U8
VIN
GND
+VO
0
RS1_15S05
ISO_5V
5V 200mA
C128
4.7uF/25V
C129
0.1uF 50V
C30
1uF 50V 10%
R186
250R
GND
ISO_GND
VDD_24V
R207
25W8R2J
Q30
1 G
2 D
3 S
IRLR024NTRPBF
R208
10K
R209
120R
Discharge
Discharge [6]
R401 place netx to R207.
VDD_3V3
C206
100nF/16V
TMEP1
VDD
VOUT
GND
TMP235A4DBZT
Temp_SEN [6]
VDD_24V
R204
15K
R206
1K
PWR_SEN
PWR_SEN [6]
R205
2K
C130
0.1uF 50V
C131
0.1uF 50V
C132
0.1uF 50V

wayzim 中科微至

中科微至智能制造科技江苏股份有限公司

DESIGNE:	CHECK:	APPROVE

Title POWER

Size	Document Number	Rev
A3	IO_CTRL_TOP_R10_0907	R10

Date: Monday, July 24, 2023 Sheet 5 of 10

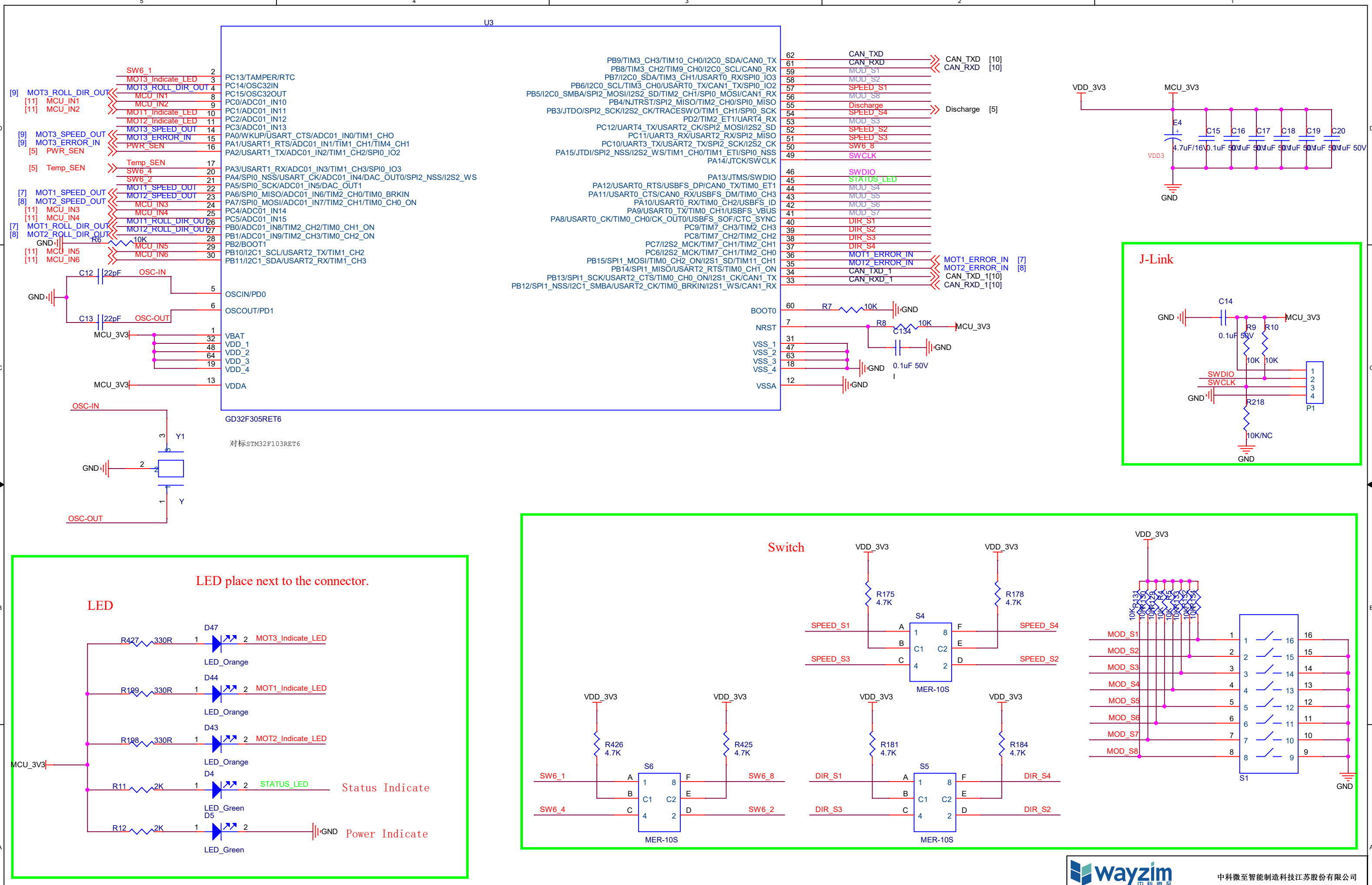
U3
GD32F305RET6
对标STM32F103RET6
SW6_1
MOT3_Indicate_LED
MOT3_ROLL_DIR_OUT
MCU_IN1
MCU_IN2
MOT1_Indicate_LED
MOT2_Indicate_LED
MOT3_SPEED_OUT
MOT3_ERROR_IN
PWR_SEN
Temp_SEN
SW6_4
SW6_2
MOT1_SPEED_OUT
MOT2_SPEED_OUT
MCU_IN3
MCU_IN4
MOT1_ROLL_DIR_OUT
MOT2_ROLL_DIR_OUT
MCU_IN5
MCU_IN6
PC13/TAMPER/RTC
PC14/OSC32IN
PC15/OSC32OUT
PC0/ADC01_IN10
PC1/ADC01_IN11
PC2/ADC01_IN12
PC3/ADC01_IN13
PA0/WKUP/USART_CTS/ADC01_IN0/TIM1_CHO
PA1/USART1_RTS/ADC01_IN1/TIM1_CH1/TIM4_CH1
PA2/USART1_TX/ADC01_IN2/TIM1_CH2/SPI0_IO2
PA3/USART1_RX/ADC01_IN3/TIM1_CH3/SPI0_IO3
PA4/SPI0_NSS/USART_CK/ADC01_IN4/DAC_OUT0/SPI2_NSS/I2S2_WS
PA5/SPI0_SCK/ADC01_IN5/DAC_OUT1
PA6/SPI0_MISO/ADC01_IN6/TIM2_CH0/TIM0_BRKIN
PA7/SPI0_MOSI/ADC01_IN7/TIM2_CH1/TIM0_CH0_ON
PC4/ADC01_IN14
PC5/ADC01_IN15
PB0/ADC01_IN8/TIM2_CH2/TIM0_CH1_ON
PB1/ADC01_IN9/TIM2_CH3/TIM0_CH2_ON
PB2/BOOT1
PB10/I2C1_SCL/USART2_TX/TIM1_CH2
PB11/I2C1_SDA/USART2_RX/TIM1_CH3
OSCIN/PD0
OSCOUT/PD1
VBAT
VDD_1
VDD_2
VDD_3
VDD_4
VDDA
C12 22pF OSC-IN
C13 22pF OSC-OUT
R6 10K
MCU_3V3
GND
Y1
Y
OSC-IN
OSC-OUT
PB9/TIM3_CH3/TIM10_CH0/I2C0_SDA/CAN0_TX
PB8/TIM3_CH2/TIM9_CH0/I2C0_SCL/CAN0_RX
PB7/I2C0_SDA/TIM3_CH1/USART0_RX/SPI0_IO3
PB6/I2C0_SCL/TIM3_CH0/USART0_TX/CAN1_TX/SPI0_IO2
PB5/I2C0_SMBA/SPI2_MOSI/I2S2_SD/TIM2_CH1/SPI0_MOSI/CAN1_RX
PB4/NJTRST/SPI2_MISO/TIM2_CH0/SPI0_MISO
PB3/JTDO/SPI2_SCK/I2S2_CK/TRACESWO/TIM1_CH1/SPI0_SCK
PD2/TIM2_ET1/UART4_RX
PC12/UART4_TX/USART2_CK/SPI2_MOSI/I2S2_SD
PC11/UART3_RX/USART2_RX/SPI2_MISO
PC10/UART3_TX/USART2_TX/SPI2_SCK/I2S2_CK
PA15/JTDI/SPI2_NSS/I2S2_WS/TIM1_CH0/TIM1_ETI/SPI0_NSS
PA14/JTCK/SWCLK
PA13/JTMS/SWDIO
PA12/USART0_RTS/USBFS_DP/CAN0_TX/TIM0_ET1
PA11/USART0_CTS/CAN0_RX/USBFS_DM/TIM0_CH3
PA10/USART0_RX/TIM0_CH2/USBFS_ID
PA9/USART0_TX/TIM0_CH1/USBFS_VBUS
PA8/USART0_CK/TIM0_CH0/CK_OUT0/USBFS_SOF/CTC_SYNC
PC9/TIM7_CH3/TIM2_CH3
PC8/TIM7_CH2/TIM2_CH2
PC7/I2S2_MCK/TIM7_CH1/TIM2_CH1
PC6/I2S2_MCK/TIM7_CH0/TIM2_CH0
PB15/SPI1_MOSI/TIM0_CH2_ON/I2S1_SD/TIM11_CH1
PB14/SPI1_MISO/TIM0_CH1_ON
PB13/SPI1_SCK/USART2_CTS/TIM0_CH0_ON/I2S1_CK/CAN1_TX
PB12/SPI1_NSS/I2C1_SMBA/USART2_CK/TIM0_BRKIN/I2S1_WS/CAN1_RX
BOOT0
NRST
VSS_1
VSS_2
VSS_3
VSS_4
VSSA
CAN_TXD
CAN_RXD
MOD_S1
MOD_S2
SPEED_S1
MOD_S8
Discharge
SPEED_S4
MOD_S3
SPEED_S2
SPEED_S3
SW6_8
SWCLK
SWDIO
STATUS_LED
MOD_S4
MOD_S5
MOD_S6
MOD_S7
DIR_S1
DIR_S2
DIR_S3
DIR_S4
MOT1_ERROR_IN
MOT2_ERROR_IN
CAN_TXD_1
CAN_RXD_1
R7 10K
R8 10K
C134 0.1uF 50V
VDD_3V3
E4 4.7uF/16V
C15 C16 C17 C18 C19 C20 0.1uF 50V
VDD3
J-Link
C14 0.1uF 50V
R9 10K
R10 10K
R218 10K/NC
P1
LED place next to the connector.
LED
R427 330R
D47 LED_Orange
MOT3_Indicate_LED
R199 330R
D44 LED_Orange
MOT1_Indicate_LED
R198 330R
D43 LED_Orange
MOT2_Indicate_LED
R11 2K
D4 LED_Green
STATUS_LED
Status Indicate
R12 2K
D5 LED_Green
Power Indicate
Switch
R175 4.7K
R178 4.7K
S4 MER-10S
R426 4.7K
R425 4.7K
S6 MER-10S
SW6_1
SW6_4
SW6_8
SW6_2
R181 4.7K
R184 4.7K
S5 MER-10S
DIR_S1
DIR_S3
DIR_S4
DIR_S2
S1
MOD_S1
MOD_S2
MOD_S3
MOD_S4
MOD_S5
MOD_S6
MOD_S7
MOD_S8
R131 10K

wayzim 中科微至

中科微至智能制造科技江苏股份有限公司

DESIGNE:	CHECK:	APPROVE

Title MCU

Size A3 Document Number IO_CTRL_TOP_R10_0907 Rev R10

Date: Monday, July 24, 2023 Sheet 6 of 10

1	ERROR	故障输入
2	ROLL	旋转方向输出
4	SPD	速度输出

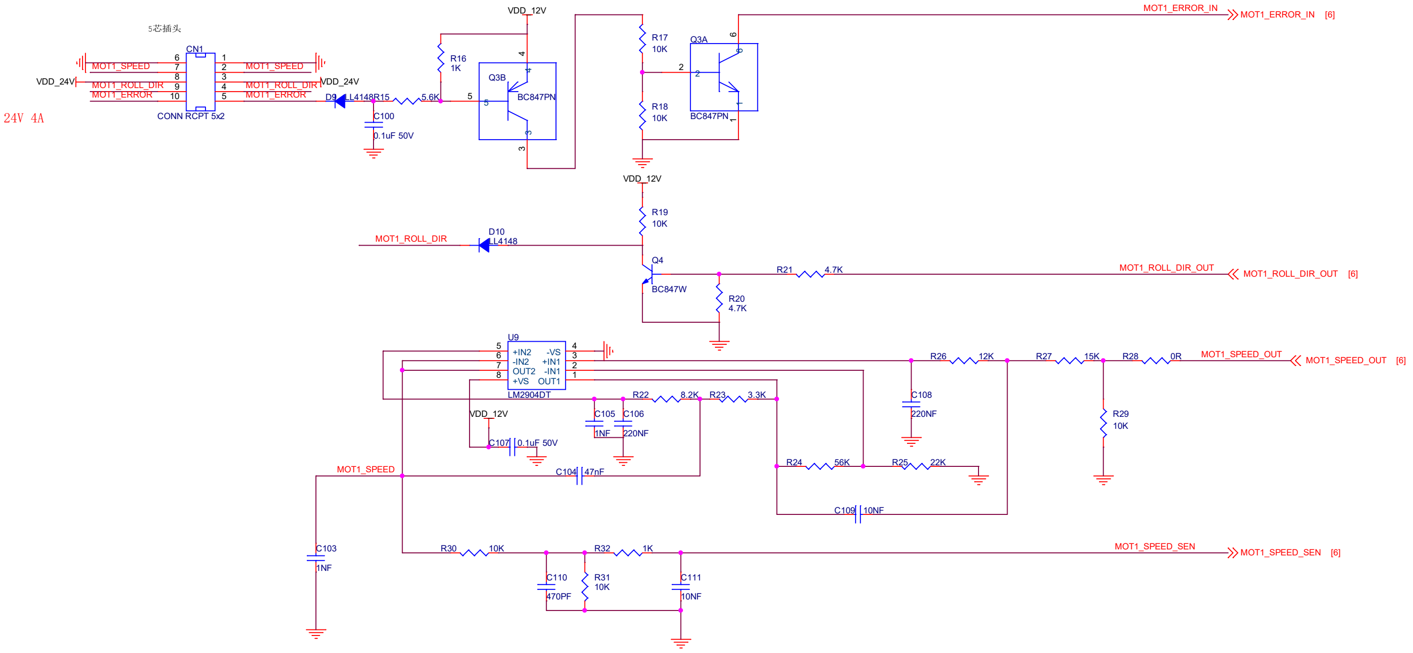
5芯插头
24V 4A
CN1
CONN RCPT 5x2
MOT1_SPEED
VDD_24V
MOT1_ROLL_DIR
MOT1_ERROR
D9
L4148
R15
5.6K
C100
0.1uF 50V
VDD_12V
R16
1K
Q3B
BC847PN
R17
10K
R18
10K
Q3A
BC847PN
MOT1_ERROR_IN
MOT1_ERROR_IN [6]
R19
10K
D10
L4148
MOT1_ROLL_DIR
Q4
BC847W
R21
4.7K
R20
4.7K
MOT1_ROLL_DIR_OUT
MOT1_ROLL_DIR_OUT [6]
U9
LM2904DT
+IN2
-IN2
OUT2
+VS
-VS
+IN1
-IN1
OUT1
R22
8.2K
R23
3.3K
C105
1NF
C106
220NF
C107
0.1uF 50V
C104
47nF
R24
56K
R25
22K
C109
10NF
R26
12K
C108
220NF
R27
15K
R28
0R
R29
10K
MOT1_SPEED_OUT
MOT1_SPEED_OUT [6]
C103
1NF
R30
10K
C110
470PF
R31
10K
R32
1K
C111
10NF
MOT1_SPEED_SEN
MOT1_SPEED_SEN [6]

wayzim 中科微至

中科微至智能制造科技江苏股份有限公司

DESIGNE:	CHECK:	APPROVE

Title MOT1_OUT

Size A3 Document Number IO_CTRL_TOP_R10_0907 Rev R10

Date: Monday, July 24, 2023 Sheet 7 of 10

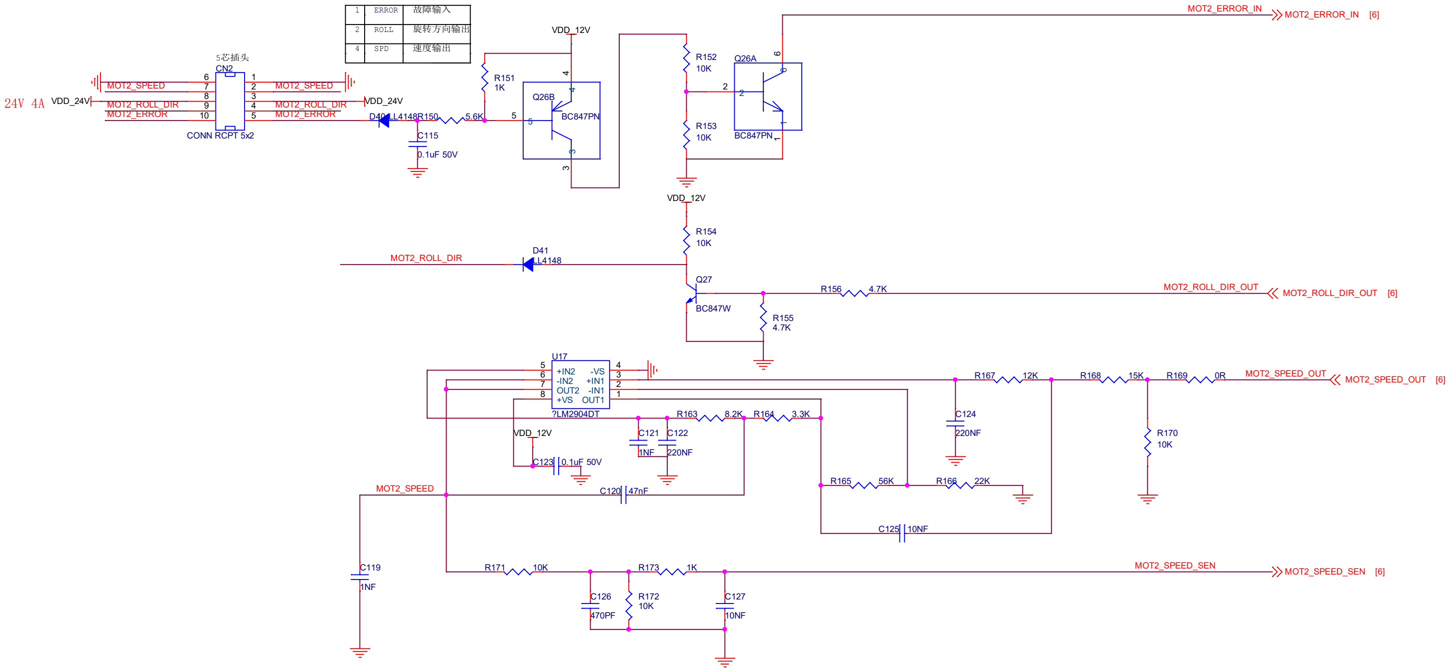
5芯插头
CN2
CONN RCPT 5x2
24V 4A
VDD_24V
MOT2_SPEED
MOT2_ROLL_DIR
MOT2_ERROR
VDD_24V
D40 LL4148
R150 5.6K
C115 0.1uF 50V
R151 1K
VDD_12V
Q26B BC847PN
R152 10K
R153 10K
Q26A BC847PN
MOT2_ERROR_IN
MOT2_ERROR_IN [6]
VDD_12V
R154 10K
D41 LL4148
MOT2_ROLL_DIR
Q27 BC847W
R156 4.7K
R155 4.7K
MOT2_ROLL_DIR_OUT
MOT2_ROLL_DIR_OUT [6]
U17 ?LM2904DT
+IN2 -IN2 OUT2 +VS -VS +IN1 -IN1 OUT1
VDD_12V
C123 0.1uF 50V
C121 1NF
C122 220NF
R163 8.2K
R164 3.3K
C120 47nF
MOT2_SPEED
R165 56K
R166 22K
C125 10NF
R167 12K
C124 220NF
R168 15K
R169 0R
R170 10K
MOT2_SPEED_OUT
MOT2_SPEED_OUT [6]
C119 1NF
R171 10K
R173 1K
C126 470PF
R172 10K
C127 10NF
MOT2_SPEED_SEN
MOT2_SPEED_SEN [6]

1	ERROR	故障输入
2	ROLL	旋转方向输出
4	SPD	速度输出

wayzim 中科微至　中科微至智能制造科技江苏股份有限公司

DESIGNE:	CHECK:	APPROVE

Title MOT2_OUT

Size A3　Document Number IO_CTRL_TOP_R10_0907　Rev R10

Date: Monday, July 24, 2023　Sheet 8 of 10

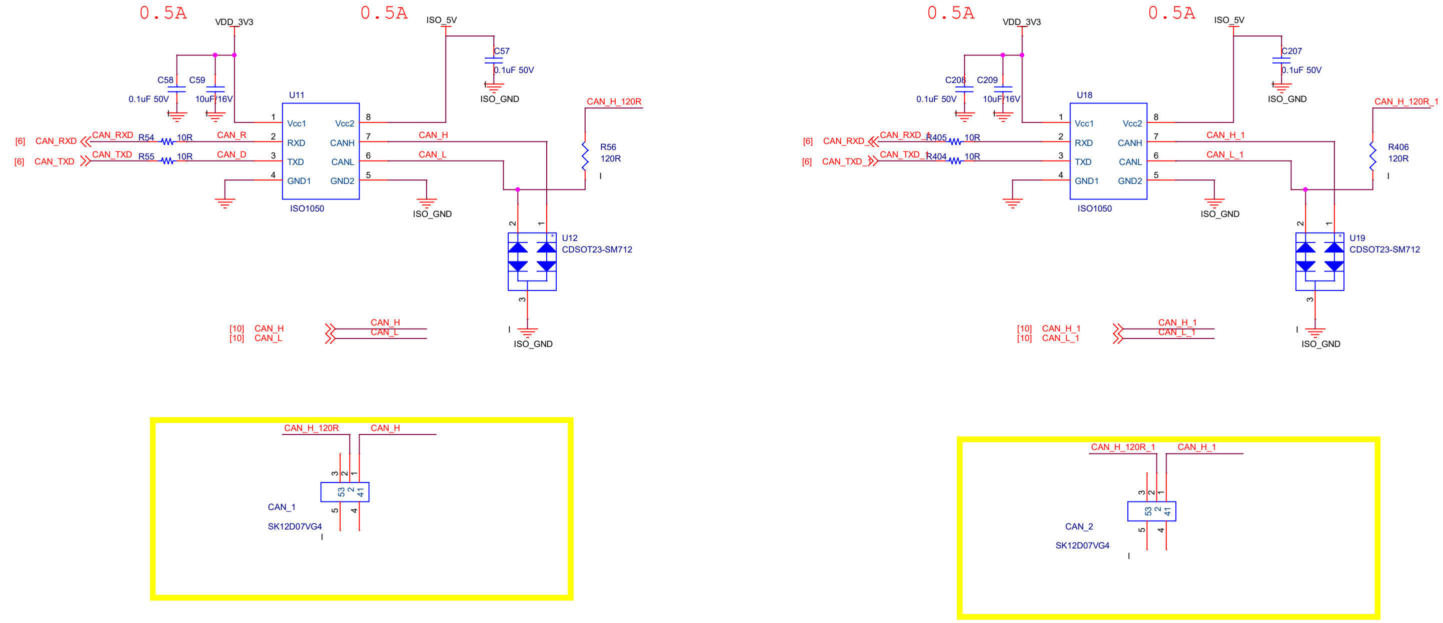
0.5A
VDD_3V3
0.5A
ISO_5V
C57
0.1uF 50V
ISO_GND
C58
C59
0.1uF 50V
10uF/16V
U11
Vcc1
Vcc2
RXD
CANH
TXD
CANL
GND1
GND2
ISO1050
ISO_GND
[6] CAN_RXD
[6] CAN_TXD
CAN_RXD
CAN_TXD
R54 10R
R55 10R
CAN_R
CAN_D
CAN_H
CAN_L
CAN_H_120R
R56
120R
U12
CDSOT23-SM712
ISO_GND
[10] CAN_H
[10] CAN_L
CAN_H
CAN_L
CAN_H_120R
CAN_H
CAN_1
SK12D07VG4
0.5A
VDD_3V3
0.5A
ISO_5V
C207
0.1uF 50V
ISO_GND
C208
C209
0.1uF 50V
10uF/16V
U18
Vcc1
Vcc2
RXD
CANH
TXD
CANL
GND1
GND2
ISO1050
ISO_GND
[6] CAN_RXD
[6] CAN_TXD
CAN_RXD
CAN_TXD
R405 10R
R404 10R
CAN_H_1
CAN_L_1
CAN_H_120R_1
R406
120R
U19
CDSOT23-SM712
ISO_GND
[10] CAN_H_1
[10] CAN_L_1
CAN_H_1
CAN_L_1
CAN_H_120R_1
CAN_H_1
CAN_2
SK12D07VG4

wayzim 中科微至

中科微至智能制造科技江苏股份有限公司

DESIGNE:	CHECK:	APPROVE

Title CAN

Size	Document Number	Rev
A3	IO_CTRL_TOP_R10_0907	R10

Date: Monday, July 24, 2023 Sheet 9 of 10

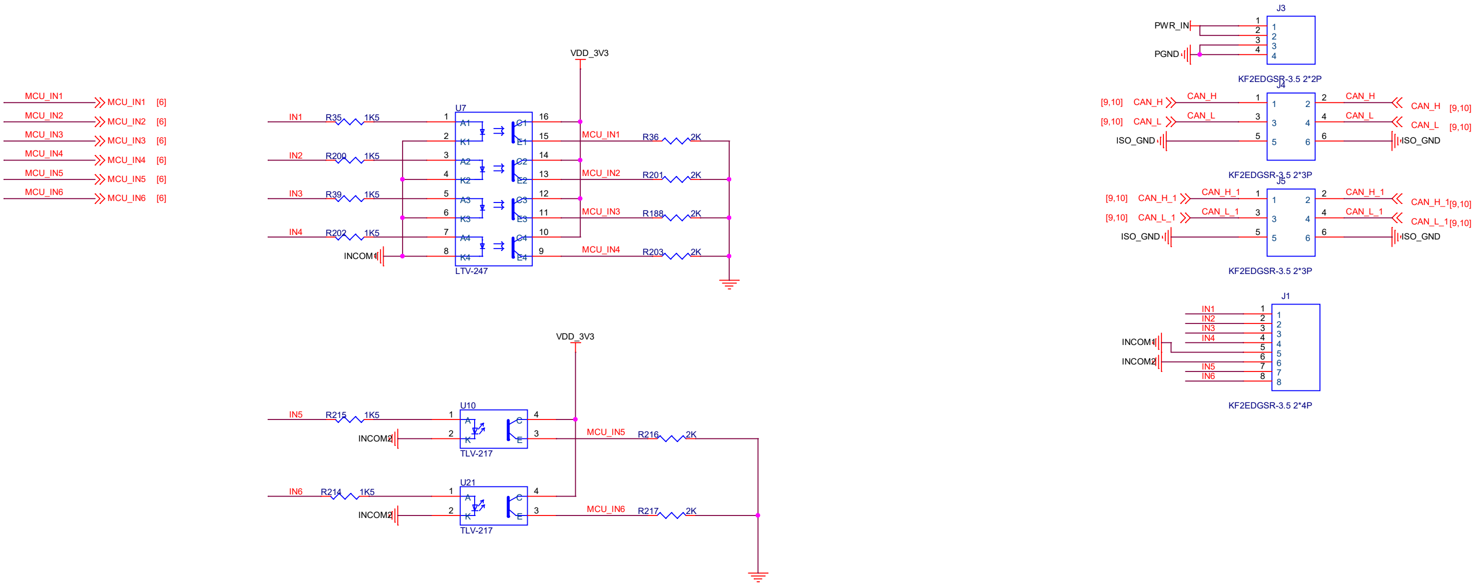
MCU_IN1
MCU_IN1 [6]
MCU_IN2
MCU_IN2 [6]
MCU_IN3
MCU_IN3 [6]
MCU_IN4
MCU_IN4 [6]
MCU_IN5
MCU_IN5 [6]
MCU_IN6
MCU_IN6 [6]
VDD_3V3
U7
IN1 R35 1K5
IN2 R200 1K5
IN3 R39 1K5
IN4 R202 1K5
INCOM1
A1 K1 A2 K2 A3 K3 A4 K4
C1 E1 C2 E2 C3 E3 C4 E4
1 2 3 4 5 6 7 8
16 15 14 13 12 11 10 9
LTV-247
MCU_IN1 R36 2K
MCU_IN2 R201 2K
MCU_IN3 R188 2K
MCU_IN4 R203 2K
VDD_3V3
U10
IN5 R215 1K5
INCOM2
A K C E
TLV-217
MCU_IN5 R216 2K
U21
IN6 R214 1K5
INCOM2
TLV-217
MCU_IN6 R217 2K
J3
PWR_IN
PGND
KF2EDGSR-3.5 2*2P
J4
[9,10] CAN_H
[9,10] CAN_L
ISO_GND
CAN_H [9,10]
CAN_L [9,10]
ISO_GND
KF2EDGSR-3.5 2*3P
J5
[9,10] CAN_H_1
[9,10] CAN_L_1
ISO_GND
CAN_H_1 [9,10]
CAN_L_1 [9,10]
ISO_GND
KF2EDGSR-3.5 2*3P
J1
IN1 IN2 IN3 IN4
INCOM1
INCOM2
IN5 IN6
KF2EDGSR-3.5 2*4P

wayzim 中科微至

中科微至智能制造科技江苏股份有限公司

DESIGNE:	CHECK:	APPROVE

Title XIN/XOUT

Size	Document Number	Rev
A3	IO_CTRL_TOP_R10_0907	R10

Date: Monday, July 24, 2023 Sheet 10 of 10